Contents

Warranty Information, Performance Assurance, and Application Limitation ..... Inside Cover
A Guide for using SUN Catalogues iii
The SUN Code System for Ordering viii
SUN Product Overview xii
Technical Information about SUN Products xiv
Cartridge Control Options xvi
Section 11: LINE MOUNT BODIES **11.00.02**
Line Mount Body Locator **11.00.02**
Technical Tips 11.02
Line Mount Bodies **11.04**
Series 1, T-13A 11.04
Series 1, T-10A 11.07
Series 1, T-11A 11.20
Series 1, T-21A 11.41
Series 1, T-31A 11.43
Series 2, T-5A 11.44
Series 2, T-3A 11.47
Series 2, T-2A 11.62
Series 2, T-22A 11.83
Series 2, T-32A 11.86
Series 3, T-16A 11.87
Series 3, T-17A 11.108
Series 3, T-23A 11.150
Series 3, T-33A 11.162
Series 4, T-18A 11.166
Series 4, T-19A 11.186
Series 4, T-24A 11.231
Series 4, T-34A 11.248
Section 12: SANDWICH BODIES **12.007**
Sandwich Body Locator **12.007**
Section 13: VALVE ASSEMBLY PACKAGES **13.00.02**
Valve Assembly Locator 13.00.02
Valve Assembly Packages, Ordering Information 13.01
Electrical Connector Options for Solenoid Operated Assemblies 13.01
Valve Assemblies 13.02
Solenoid Operated Ventable Relief Assemblies 13.02
Solenoid and Relief Pilot Control Assembly 13.14
Cross-Port Relief Assemblies 13.15
Hydrostatic Transmission Assemblies 13.20
Hot Oil Shuttle and Relief Assemblies 13.28
Flow Divider/Combiner Tractive Drive Assemblies 13.38
Technical Tips on Regenerative Valves 13.42
Regeneration Assemblies 13.43
Accumulator Dump Assemblies 13.50
Pump Circuit Control Assemblies 13.52
Pressure-Compensated Priority Flow Control Assemblies 13.54
Valve Assembly Package Cross Reference Chart 13.57
Section 14: GENERAL INFORMATION **14.02**
Direct Motor Mounting Bodies List 14.02
Cartridge Cavities and Cavity Tools 14.04
Solenoid Valve Interfaces 14.13
Cartridge Control Kits 14.14
Orifice Pressure Drop Data 14.15
Coil Information 14.16
Model Code Index 14.17
SUN Distributor Listing ..... Inside Back Cover

Prices for Sun Cavity Form Tools are net and not subject to discounts.

Prices for Custom Products and Modifications of Standard Valves are by quotation only.

Sun Hydraulics reserves the right to change existing prices and discounts at any time without notice to customers.

Selling prices are governed by the price list in effect at the time of acceptance of a purchase order.

Specifications, descriptions and illustrative material contained herein were as accurate as known at the time this publication was approved for printing.

SUN Hydraulics Limited reserves the right to discontinue models at any time, or change prices, specifications or designs without notice or incurring obligation.

This catalogue is published by SUN Hydraulics Corporation, 1500 West University Parkway, Sarasota, FL 34243 USA.

All rights reserved. This book, or any part thereof, may not be reproduced or transmitted in any form or by any means, electronic or mechanical, including photocopying, recording, or information storage and retrieval systems, for any purpose without the express written permission of SUN Hydraulics Corporation.

© 1994 SUN Hydraulics Corporation
Sarasota, FL 34243 USA

Printed in the United States of America

Catalogue # 999-901

THREE SEPARATE SUN CATALOGUES

SUN Hydraulics will be publishing a series of three separate catalogues to present the full range of SUN products to the marketplace.

1. **The Cartridge Catalogue** presents SUN's two-piece, floating style screw-in cartridge valves.
2. **The Line Mount Body Catalogue** contains line mount and direct motor mounted bodies and SUN pre-configured valve assemblies.
3. **The Sandwich Body Catalogue** presents SUN's ISO 03, 05, 05 x, y, 07, 08, sandwiches and one to five station bar manifolds.

Important "Locators"

The three catalogues are cross referenced within a number of "Locators" that are placed at the beginning of catalogue sections. Each Locator helps to identify and locate products not only in the catalogue which you may be using, but also in the two other catalogues. Every catalogue contains locators that reference products found in other SUN catalogues.

At the foundation of all locators are the SUN cavities, represented by the letter T-followed by a number and the letter A. (Example: T-3A) See page 14.04 for further information on SUN cavities. When the cavity configuration of a cartridge matches the cavity configuration in a mounting component, a physical fit is guaranteed. See the example below. However, it is important to note that because a physical fit between two components exists, it does not necessarily result in a logical and/or functional hydraulic circuit. Pay close attention to cartridge and cavity flow paths and pressure ratings to ensure a reasonable, functional circuit.

THE SUN LINE MOUNT BODY CATALOGUE

The SUN Hydraulics Line Mount Body Catalogue contains 250 pages of line mount bodies and more than 50 pages of pre-configured valve assembly packages. Line mount bodies are categorized by frame size (Series 1, 2, 3, and 4), and within each frame size, by cavity (see Contents page i). Valve Assembly Packages are categorized by function (see Contents).

Line Mount Body Section

▶▶▶ Technical Tips

Line Mount Body Technical Tips provide information on the types of ports SUN offers, detailed specifications on materials (grade 6061 aluminium and grade 65-45-12 SG iron), and inch and metric specifications on SAE four-bolt flange patterns.

▶▶▶ Line Mount Body Locator *(See Figure 2)*

The Line Mount Body Locator appears on pages 11.00.01 through 11.00.31. and serves as a guide to identifying body styles and the location of body data pages in the Line Mount Body Catalogue. Complete physical descriptions including mounting configurations and material options of bodies can be found on body data pages.

Figure 1

RPEC-LAN-FAV

Relief Valve T-10A	Line Mount Body T-10A

Line mount bodies are categorized by cavity and include model codes, function symbols and page numbers of cartridges in the Cartridge Catalogue that have identical cavity configurations. The sequence of appearance of the locators matches that of body data pages in the Line Mount Body Catalogue. All frame size 1 cavities appear first; within each frame size grouping, two-port cavity bodies appear first, followed by three-port and four-port cavity bodies.

NOTE: Three-port bodies (T-2A, T-11A, T-17A, and T-19A cavities) with a high capacity port three are listed on separate locator pages from standard third port capacity bodies. This is done in an attempt to avoid confusion on what cartridges should be used in these bodies. Typically, only reducing/relieving and priority flow control cartridges are used in three-port bodies with a high capacity third port.

NOTE: It is critical to remember that a physical cavity match between cartridge and body does not necessarily guarantee a functional or logical hydraulic circuit. Before ordering any cartridge/body assembly, first look at both cartridge and body data pages to ensure the assembly results in a functional circuit.

▶▶▶ Line Mount Body Data Page *(See Figure 3)*

Data pages for line mount bodies provide all information required to specify and apply the product presented. The format of the page is presented in a consistent and easy to read style. Generally, there are two basic body styles shown on each page. (In some instances, one body with a multiplicity of port options occupies a single page.)

To help portray body configurations, a stylized rendering is included above and to the left of each body drawing. A schematic rendering is also presented for some of the more complicated bodies.

Below the stylized rendering is a list of cartridges with their corresponding cartridge catalogue page numbers, that can be used in the body shown. The cartridges listed on body data pages do not represent all possible combinations. However, the cartridges listed do guarantee a logical, functional circuit. Other cartridges with matching cavity configurations can also be used to create a logical, functional circuit.

Figure 2 ***Line Mount Body Locator***

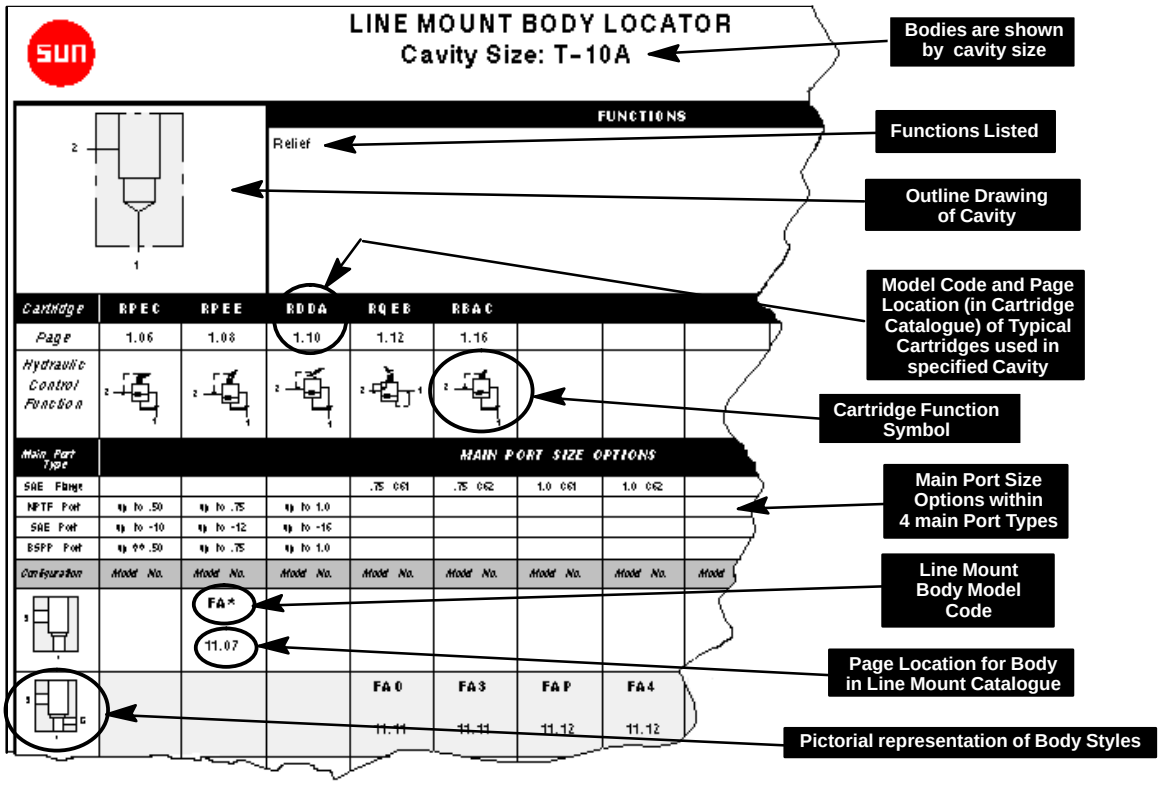

Figure 3 ***Line Mount Body Data Page***

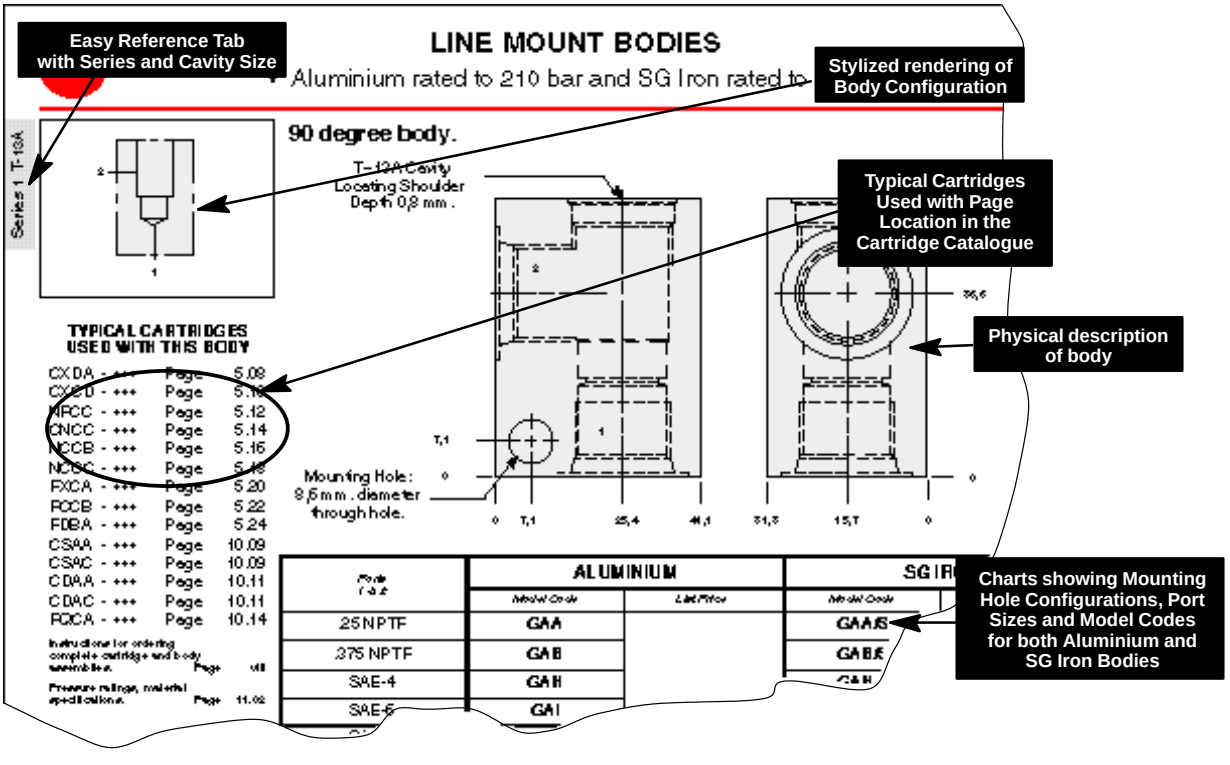

VALVE ASSEMBLY PACKAGES

The Valve Assembly Package section of this catalogue includes a locator, general ordering information (including electrical connector options for solenoid operated assemblies), and valve assembly data pages.

SUN valve assemblies include two or more dissimilar cartridges in a single manifold block. Cartridge configurations (control and adjustment ranges) are carefully selected for use in these products. While the user has the option of changing the configuration of the control cartridge in an assembly, SUN recommends careful consideration be applied before making any changes.

NOTE: This section includes a Cross Reference Chart to Valve Assembly Model Codes (see page 13.57). Beginning in 1990, SUN designed many line mount bodies with integral checks and/or shuttle valves that provide a functional and/or physical replacement for products that were previously offered as valve assemblies. The chart provided at the end of the valve assembly section details these changes.The cross reference chart also contains new assembly designs that offer a functional improvement over previous assemblies.

IMPORTANT: *No models manufactured by SUN have been obsoleted. Older valve assembly products that have a new line mount replacement or new functional design can still be ordered in the original configuration using the old valve assembly model code.*

Valve Assembly Package Section

▶▶▶ Valve Assembly Locator *(See Figure 4)*

The Valve Assembly Locator is a detailed table of contents for this section of the catalogue. The locator presents assemblies by function, including a circuit diagram, and lists the page numbers where detailed information can be found. Locators also list the main cartridges used in an assembly, with the corresponding cartridge page in the SUN Cartridge Catalogue.

▶▶▶ Valve Assembly Data Page *(See Figure 5)*

Valve assembly data pages present a detailed physical description of the product, a circuit description, and all porting, mounting configuration, and material options. Where necessary, technical tips regarding application of a specific assembly package are provided on the data page.

It is important to note that all solenoid operated assemblies are limited to 210 bar operating pressure. The pressure limitation is a result of using Waterman solenoids in these packages. SUN is currently adapting these packages to operate at pressure ratings up to 350 bar using SUN's new solenoid valves. Consult your distributor or the SUN factory if you require high pressure operation.

Figure 4 ***Valve Assembly Package Locator***

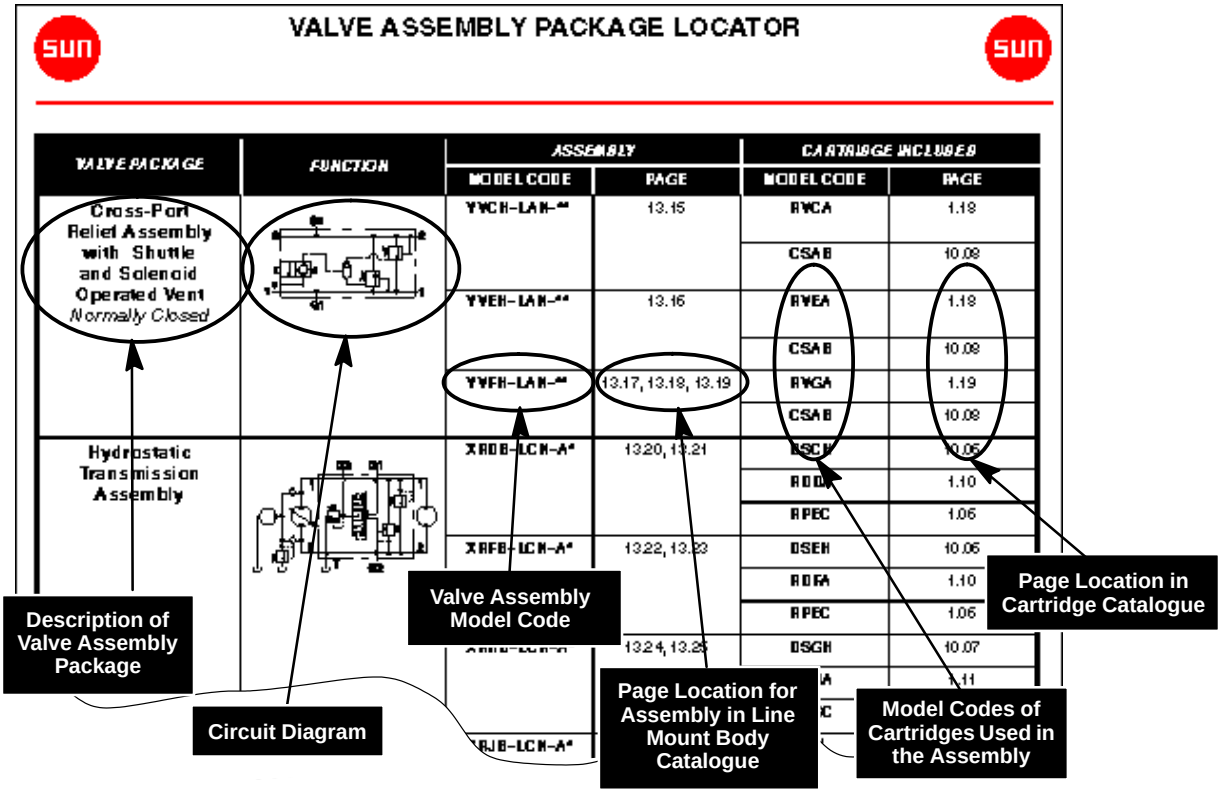

Figure 5 ***Valve Assembly Package Data Page***

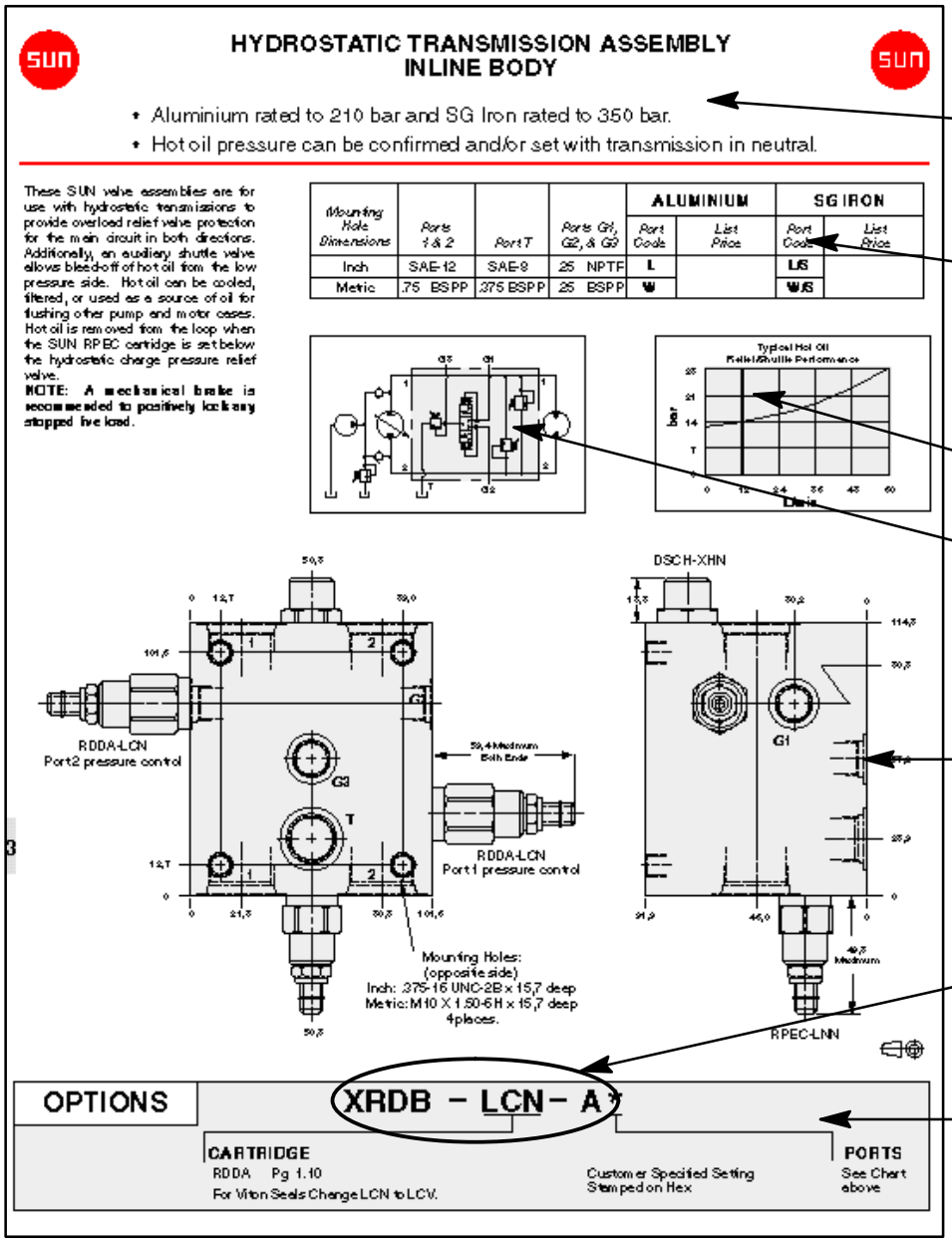

General Information Section

All SUN catalogues contain a general information section for the customer's reference. This section includes:

- A charted listing, by function, of motor mount bodies for Danfoss, Eaton, and Staffa motors.
- Cavity drawings for all SUN cavities in the catalogue with model codes for cavity tooling.
- Model codes for various manufacturers of solenoid valves charted by ISO interface.
- Orifice size pressure drop curves to be used when applying flow controls.
- A complete alphabetical index for all products in all three SUN catalogues.

LINE MOUNT BODY LOCATOR
Cavity Size: T–13A

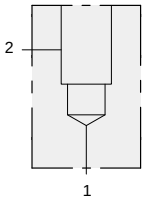

FUNCTIONS

Check	Back–to–Back Check
Flow Control	Flow Fuse
Shuttle	

Cartridge	CXDA	CXCD	NFCC	CNCC	NCCB	NCCC	FXCA	FCCB	FDBA	CSAA	CSAC
Page	5.08	5.10	5.12	5.14	5.16	5.18	5.20	5.22	5.24	10.09	10.09
Hydraulic Control Function										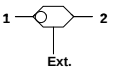	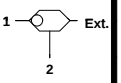

Cartridge	CDAA	CDAC	FQCA								
Page	10.11	10.11	10.14								
Hydraulic Control Function	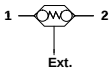	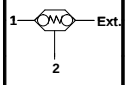	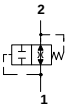								

Main Port Type	*MAIN PORT SIZE OPTIONS*										
SAE Flange											
NPTF Port	up to .375	up to .50									
SAE Port	up to –8	up to –10									
BSPP Port	up to .375	up to .50									
Configuration	*Model No.*	*Model No.*	*Model No.*	*Model No.*	*Model No.*	*Model No.*	*Model No.*	*Model No.*	*Model No.*	*Model No.*	*Model No.*
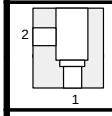	**GA*** 11.04										
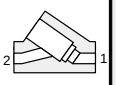	**GC*** 11.04										
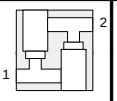	**XW*** 11.05										
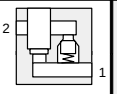	**GN*** 11.05										
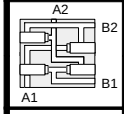		**YS*** 11.06									

11

LINE MOUNT BODY LOCATOR
Cavity Size: T–10A

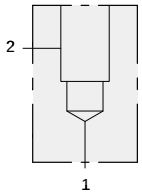

FUNCTIONS

Relief

Cartridge	RPEC	RPEE	RDDA	RQEB	RBAC						
Page	1.06	1.08	1.10	1.12	1.16						
Hydraulic Control Function											
Main Port Type	***MAIN PORT SIZE OPTIONS***										
SAE Flange				.75 C61	.75 C62	1.0 C61	1.0 C62				
NPTF Port	up to .50	up to .75	up to 1.0								
SAE Port	up to –10	up to –12	up to –16								
BSPP Port	up to .50	up to .75	up to 1.0								
Configuration	*Model No.*	*Model No.*	*Model No.*	*Model No.*	*Model No.*	*Model No.*	*Model No.*	*Model No.*	*Model No.*	*Model No.*	*Model No.*
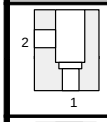		**FA*** 11.07									
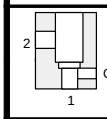				**FAO** 11.11	**FA3** 11.11	**FAP** 11.12	**FA4** 11.12				
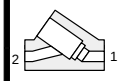	**FC*** 11.08										
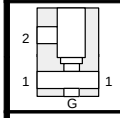		**FE*** 11.09									
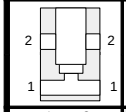	**WN*** 11.10										
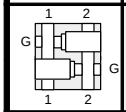			**YF*** 11.16								
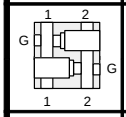				**YFO** 11.17	**YF3** 11.17	**YFP** 11.18	**YF4** 11.18				
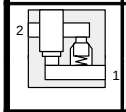	**FN*** 11.19										
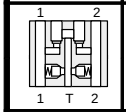	**FM*** 11.19										
						NOTE: Line and sandwich bodies are available with SAE flange inlets and threaded port outlets. See pages 11.13 to 11.15.					

11

LINE MOUNT BODY LOCATOR
Cavity Size: T–11A

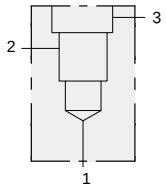

FUNCTIONS

Vented Relief	Logic
Sequence	Shuttle
Reducing	Back–to–Back Check
Pilot–to–Open Check	Pilot–to–Close Check
Counterbalance	

Cartridge	RBAD	RVCA	RSDC	SQDB	SCCA	PBDB	CBCA	CBCG	CBCH	CKCB	LODC
Page	1.17	1.18	2.06	2.08	2.12	3.06	4.10	4.12	4.14	4.16	9.08
Hydraulic Control Function	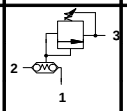	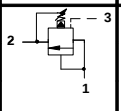	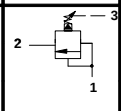	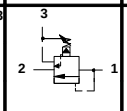	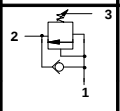	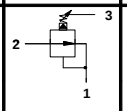	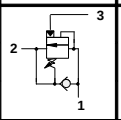	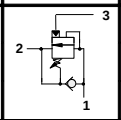	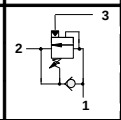	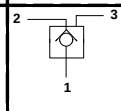	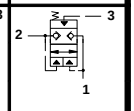

Cartridge	LKDC	LPDC	LRDC	CSAB	CSAD	CDAB	CDAD	CODA
Page	9.10	9.12	9.14	10.08	10.08	10.10	10.10	10.12
Hydraulic Control Function	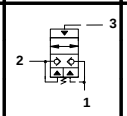	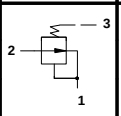	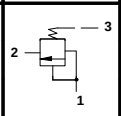	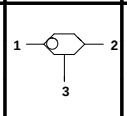	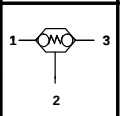	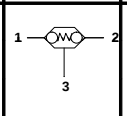	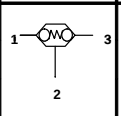	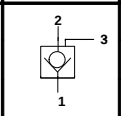

Main Port Type	*MAIN PORT SIZE OPTIONS*										
SAE Flange			.75 C61	.75 C62							
NPTF Port	up to .375	up to .50									
SAE Port	up to –8	up to –10									
BSPP Port	up to .50	up to .50									

Configuration	*Model No.*	*Model No.*	*Model No.*	*Model No.*	*Model No.*	*Model No.*	*Model No.*	*Model No.*	*Model No.*	*Model No.*	*Model No.*
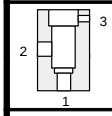		**EC*** 11.20									
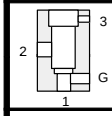		**EF*** 11.22									
	**EJ*** 11.21										
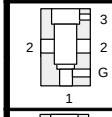		**WR*** 11.23									
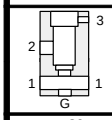		**EH*** 11.24									
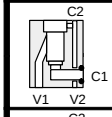	**ZT*** 11.24										
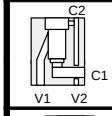	**ZR*, ZT* WPE** 11.25										
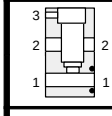			**ZM*** 11.27	**WY*** 11.27							
		**ED*** 11.28				**NOTE: Line and sandwich bodies are available with SAE flange inlets and threaded port outlets. See page 11.26.**					

11

LINE MOUNT BODY LOCATOR
Cavity Size: T–11A (Continued)

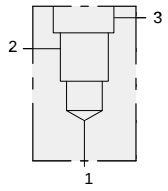

FUNCTIONS

Vented Relief	Logic
Sequence	Shuttle
Reducing	Back–to–Back Check
Pilot–to–Open Check	Pilot–to–Close Check
Counterbalance	

Cartridge	RBAD	RVCA	RSDC	SQDB	SCCA	PBDB	CBCA	CBCG	CBCH	CKCB	LODC
Page	1.17	1.18	2.06	2.08	2.12	3.06	4.10	4.12	4.14	4.16	9.08
Hydraulic Control Function	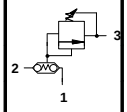	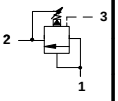	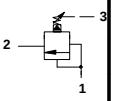	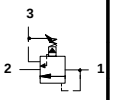	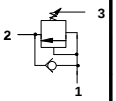	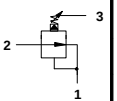	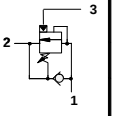	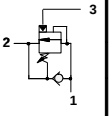	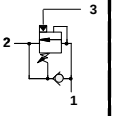	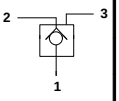	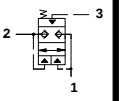

Cartridge	LKDC	LPDC	LRDC	CSAB	CSAD	CDAB	CDAD	CODA
Page	9.10	9.12	9.14	10.08	10.08	10.10	10.10	10.12
Hydraulic Control Function	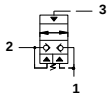	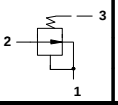	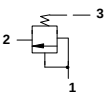	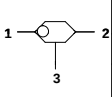	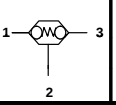	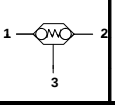	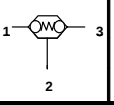	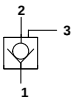

Main Port Type	*MAIN PORT SIZE OPTIONS*										
SAE Flange			.75 C61	.75 C62							
NPTF Port	up to .375	up to .50									
SAE Port	up to –8	up to –10									
BSPP Port	up to .50	up to .50									
Configuration	*Model No.*	*Model No.*	*Model No.*	*Model No.*	*Model No.*	*Model No.*	*Model No.*	*Model No.*	*Model No.*	*Model No.*	*Model No.*
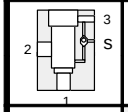		**EG*** 11.28									
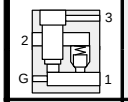		**E2*** 11.29									
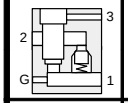		**E6*** 11.30									
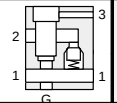		**E7*** 11.30									
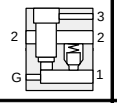		**E3*** 11.31									
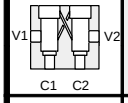		**YE*** 11.32									
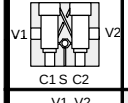		**YG*** 11.32									
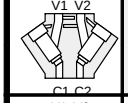	**XV*** 11.33	**XE*** 11.34									
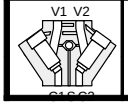	**XG*** 11.34					**NOTE: Line and sandwich bodies are available with SAE flange inlets and threaded port outlets. See page 11.27.**					

11

LINE MOUNT BODY LOCATOR
Cavity Size: T–11A (Continued)

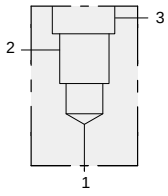

FUNCTIONS	
Vented Relief	Logic
Sequence	Shuttle
Reducing	Back–to–Back Check
Pilot–to–Open Check	Pilot–to–Close Check
Counterbalance	

Cartridge	RBAD	RVCA	RSDC	SQDB	SCCA	PBDB	CBCA	CBCG	CBCH	CKCB	LODC
Page	1.17	1.18	2.06	2.08	2.12	3.06	4.10	4.12	4.14	4.16	9.08
Hydraulic Control Function	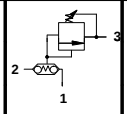	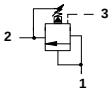	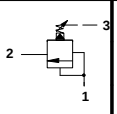	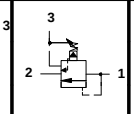	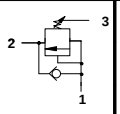	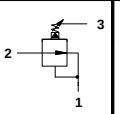	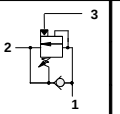	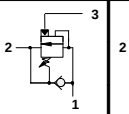	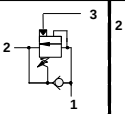	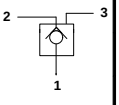	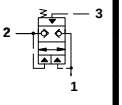

Cartridge	LKDC	LPDC	LRDC	CSAB	CSAD	CDAB	CDAD	CODA
Page	9.10	9.12	9.14	10.08	10.08	10.10	10.10	10.12
Hydraulic Control Function	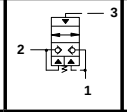	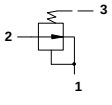	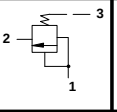	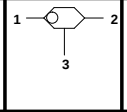	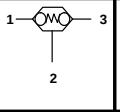	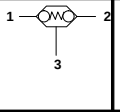	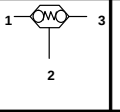	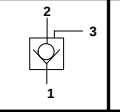

Main Port Type	MAIN PORT SIZE OPTIONS										
SAE Flange											
NPTF Port	up to .25	up to .375	up to .50	up to .75							
SAE Port	up to –6	up to –6	up to –10	up to –12							
BSPP Port	up to .25	up to .375	up to .50	up to .75							
Configuration	Model No.	Model No.	Model No.	Model No.	Model No.	Model No.	Model No.	Model No.	Model No.	Model No.	Model No.
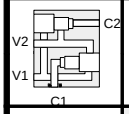		**YV*** 11.35									
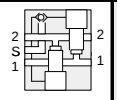				**XO*** 11.35							
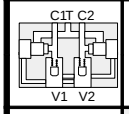			**EM*** 11.36								
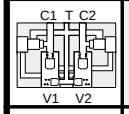			**EN*** 11.36								
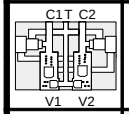			**EP*** 11.37								
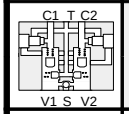			**EQ*** 11.37								
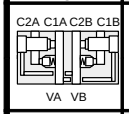			**E8*** 11.38								
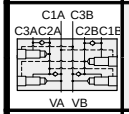			**E9*** 11.38								
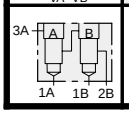	**XV***					**NOTE: Line and sandwich bodies are available with SAE flange inlets and threaded port outlets. See page 11.27.**					

11

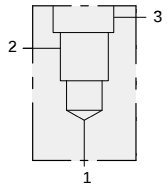

FUNCTIONS

Vented Relief	Logic
Sequence	Shuttle
Reducing	Back–to–Back Check
Pilot–to–Open Check	Pilot–to–Close Check
Counterbalance	

Cartridge	RBAD	RVCA	RSDC	SQDB	SCCA	PBDB	CBCA	CBCG	CBCH	CKCB	LODC
Page	1.17	1.18	2.06	2.08	2.12	3.06	4.10	4.12	4.14	4.16	9.08
Hydraulic Control Function	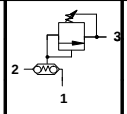	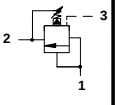	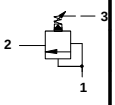	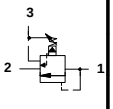	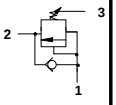	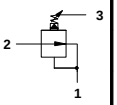	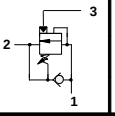	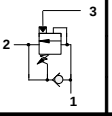	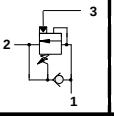	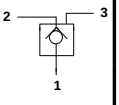	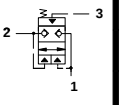

Cartridge	LKDC	LPDC	LRDC	CSAB	CDAB	CODA
Page	9.10	9.12	9.14	10.08	10.10	10.12
Hydraulic Control Function	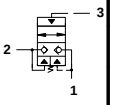	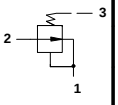	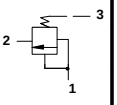	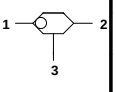	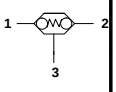	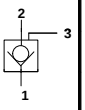

Main Port Type	*MAIN PORT SIZE OPTIONS*										
SAE Flange											
NPTF Port	up to .25	up to .50									
SAE Port	up to –6	up to –10									
BSPP Port	up to .25	up to .50									

Configuration	*Model No.*	*Model No.*	*Model No.*	*Model No.*	*Model No.*	*Model No.*	*Model No.*	*Model No.*	*Model No.*	*Model No.*	*Model No.*
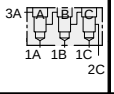	**XV*** 11.39										
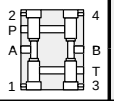		**YR*** 11.40									
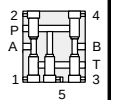		**YQ*** 11.40									
						NOTE: Line and sandwich bodies are available with SAE flange inlets and threaded port outlets. See page 11.27.					

11

LINE MOUNT BODY LOCATOR
Cavity Size: T–11A (High Capacity Port 3)

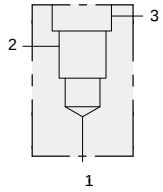

FUNCTIONS

Reducing/Relieving

Priority Flow Control

Directional Control

Cartridge	PPDB	FRCA	DPBA	DPBB	DPBC	DPBD					
Page	3.10	6.02	8.06	8.07	8.08	8.09					
Hydraulic Control Function	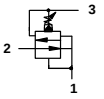		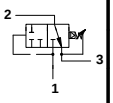	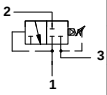	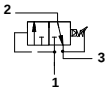	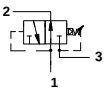					
Main Port Type	***MAIN PORT SIZE OPTIONS***										
SAE Flange											
NPTF Port	up to .50										
SAE Port	up to –10										
BSPP Port	up to .50										
Configuration	*Model No.*	*Model No.*	*Model No.*	*Model No.*	*Model No.*	*Model No.*	*Model No.*	*Model No.*	*Model No.*	*Model No.*	*Model No.*
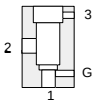	**EL*** 11.22										
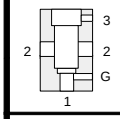	**WR*, WS*** 11.23										
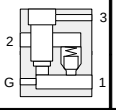	**E7*** 11.30										
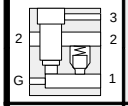	**E5*** 11.31										

11

LINE MOUNT BODY LOCATOR
Cavity Size: T–21A

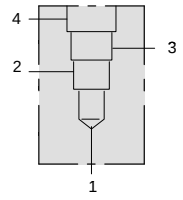

FUNCTIONS	
Vented Relief	Ventable Priority Flow Control
Reducing/Relieving with Drain	Directional Control
Reducing/Relieving with Vent	
Vented Counterbalance	
Vented Pilot–to–Open Check	

Cartridge	RVCD	PVDA	PVDB	CWCA	CWCG	CVCV	FVCA	DPBM	DPBN	DPBO	DPBP
Page	1.20	3.14	3.16	4.18	4.20	4.22	6.04	8.10	8.11	8.12	8.13
Hydraulic Control Function	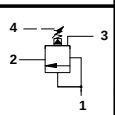	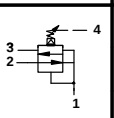	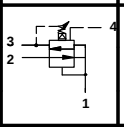	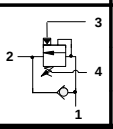	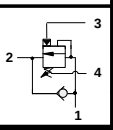	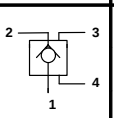	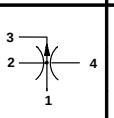	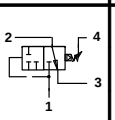	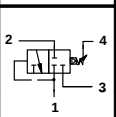	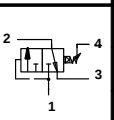	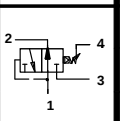

Main Port Type	*MAIN PORT SIZE OPTIONS*										
SAE Flange											
NPTF Port	up to .50										
SAE Port	up to –10										
BSPP Port	up to .50										
Configuration	*Model No.*	*Model No.*	*Model No.*	*Model No.*	*Model No.*	*Model No.*	*Model No.*	*Model No.*	*Model No.*	*Model No.*	*Model No.*
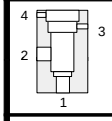	**MA*** 11.41										
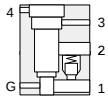	**M4*** 11.41										
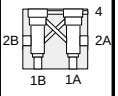	**XP*** 11.42										
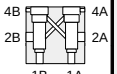	**XF*** 11.42										

11

LINE MOUNT BODY LOCATOR
Cavity Size: T–31A

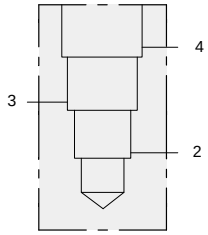

FUNCTIONS

Flow Divider

Flow Divider/Combiner

Low Side Shuttle

Cartridge	FSBD	FSCD	FSBA	FSCA	FSBS	FSCS	FSCH	DSCH			
Page	7.08	7.08	7.10	7.10	7.12	7.12	7.14	10.06			
Hydraulic Control Function			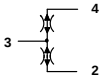	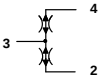				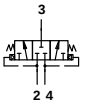			
Main Port Type	***MAIN PORT SIZE OPTIONS***										
SAE Flange											
NPTF Port	up to .50										
SAE Port	up to –10										
BSPP Port	up to .50										
Configuration	*Model No.*	*Model No.*	*Model No.*	*Model No.*	*Model No.*	*Model No.*	*Model No.*	*Model No.*	*Model No.*	*Model No.*	*Model No.*
	**MM*** 11.43										
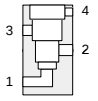	**MN*** 11.43										

11

LINE MOUNT BODY LOCATOR
Cavity Size: T–5A

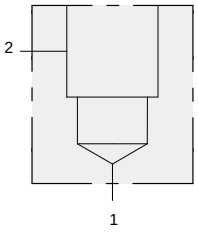

FUNCTIONS

Check	Back–to–Back Check
Flow Control	Flow Fuse

Cartridge	CXFA	CXED	NFDC	CNEC	NCEB	NCEC	FXDA	FCDB	FDCB	FQEA	
Page	5.08	5.10	5.12	5.14	5.16	5.18	5.20	5.22	5.24	10.14	
Hydraulic Control Function				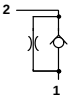	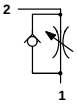	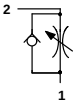		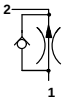	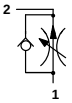		
Main Port Type	***MAIN PORT SIZE OPTIONS***										
SAE Flange			.75 C61								
NPTF Port	up to .50	up to .75									
SAE Port	up to –10	up to –12									
BSPP Port	up to .50	up to .75									
Configuration	*Model No.*	*Model No.*	*Model No.*	*Model No.*	*Model No.*	*Model No.*	*Model No.*	*Model No.*	*Model No.*	*Model No.*	*Model No.*
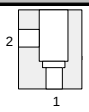	**DA*** 11.44										
			**ZKS** 11.44								
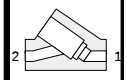	**DC*** 11.45										
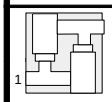		**XW*** 11.45									
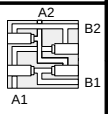		**YS*** 11.46									
		**DN*** 11.46									

11

LINE MOUNT BODY LOCATOR
Cavity Size: T–3A

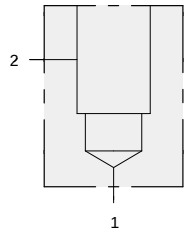

FUNCTIONS

Relief

Air Bleed and Start–Up

Cartridge	RPGC	RPGE	RDFA	RQGB	RPGD	RBAA	RBAB	NQEB			
Page	1.06	1.08	1.10	1.12	1.14	1.16	11.14	10.16			
Hydraulic Control Function					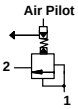		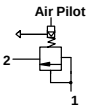	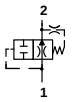			
Main Port Type	***MAIN PORT SIZE OPTIONS***										
SAE Flange				.75 C61	.75 C61	1.0 C61	1.0 C62	1.25 C61	1.25 C62		
NPTF Port	up to .75	up to .75	up to 1.0								
SAE Port	up to –10	up to –12	up to –16								
BSPP Port	up to .75	up to .75	up to 1.0								
Configuration	*Model No.*	*Model No.*	*Model No.*	*Model No.*	*Model No.*	*Model No.*	*Model No.*	*Model No.*	*Model No.*	*Model No.*	*Model No.*
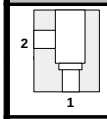		**CA*** 11.47									
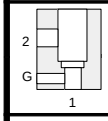			**CA*** 11.47	**CAO** 11.50	**CA3** 11.50	**CAP** 11.51	**CA4** 11.51	**CAQ** 11.52	**CA5** 11.52		
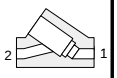	**CG*** 11.48										
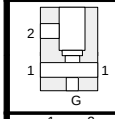		**CE*** 11.48	**CE*** 11.49								
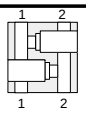	**YB*** 11.58										
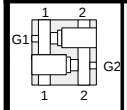			**YC*** 11.58			**YCP** 11.59	**YC4** 11.59	**YCQ** 11.60	**YC5** 11.60		
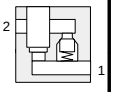	**CN*** 11.61										
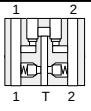		**CM*** 11.61									
						NOTE: Line and sandwich bodies are available with SAE flange inlets and threaded port outlets. See pages 11.53 to 11.57					

11

LINE MOUNT BODY LOCATOR
Cavity Size: T–2A

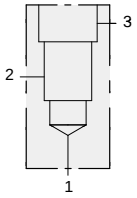

FUNCTIONS

Vented Relief	Logic
Sequence	Pilot–to–Close Check
Reducing	
Counterbalance	
Pilot–to–Open Check	

Cartridge	RVEA	RSFC	SQFB	RSFE	SCEA	PBFB	PBFC	CBEA	CBEG	CBEH	CKEB
Page	1.18	2.06	2.08	2.10	2.12	3.06	3.08	4.10	4.12	4.14	4.16
Hydraulic Control Function	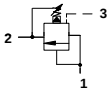	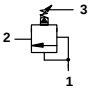	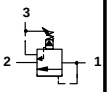	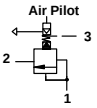	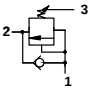	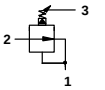	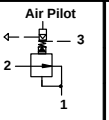	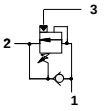	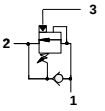	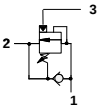	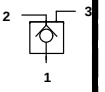

Cartridge	LOFC	LKFC	LPFC	LRFC	COFA						
Page	9.08	9.10	9.12	9.14	10.12						
Hydraulic Control Function	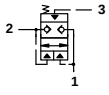	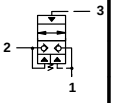		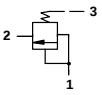	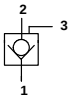						

Main Port Type	*MAIN PORT SIZE OPTIO.04.03NS*										
SAE Flange				.75 to C61	.75 to C62						
NPTF Port	up to .50	up to .75	up to .75								
SAE Port	up to –8	up to –10	up to –12								
BSPP Port	up to .50	up to .75	up to .75								
Configuration	*Model No.*	*Model No.*	*Model No.*	*Model No.*	*Model No.*	*Model No.*	*Model No.*	*Model No.*	*Model No.*	*Model No.*	*Model No.*
			**BC*** 11.62								
			**BF*** 11.64								
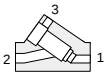			**BV*** 11.65								
				**ZNV** 11.69	**ZDS** 11.69						
			**WS*** 11.66								
			**BH*** 11.65								
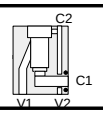	**ZT*** 11.71										
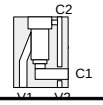	**ZTX, ZRM** 11.71										
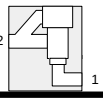		**BD*** 11.63				**NOTE: Line and sandwich bodies are available with SAE flange inlets and threaded port outlets. See pages 11.67 to 11.70.**					

11

LINE MOUNT BODY LOCATOR
Cavity Size: T–2A (Continued)

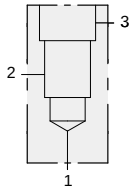

FUNCTIONS

Vented Relief	Logic
Sequence	Pilot–to–Close Check
Reducing	
Counterbalance	
Pilot–to–Open Check	

Cartridge	RVEA	RSFC	SQFB	RSFE	SCEA	PBFB	PBFC	CBEA	CBEG	CBEH	CKEB
Page	1.18	2.06	2.08	2.10	2.12	3.06	3.08	4.10	4.12	4.14	4.16
Hydraulic Control Function	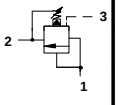		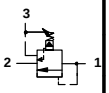	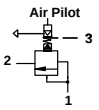			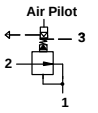	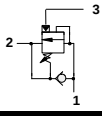	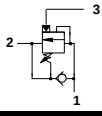	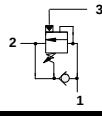	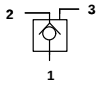

Cartridge	LOFC	LKFC	LPFC	LRFC	COFA
Page	9.08	9.10	9.12	9.14	10.12
Hydraulic Control Function	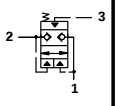	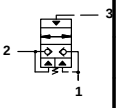	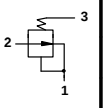	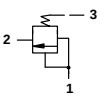	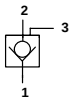

Main Port Type	MAIN PORT SIZE OPTIONS										
SAE Flange											
NPTF Port	up to .75	up to .75									
SAE Port	up to –10	up to –12									
BSPP Port	up to .75	up to .75									
Configuration	Model No.	Model No.	Model No.	Model No.	Model No.	Model No.	Model No.	Model No.	Model No.	Model No.	Model No.
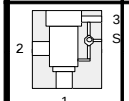	**BG*** 11.70										
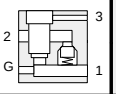	**B2*** 11.72										
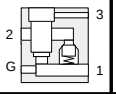	**B6*** 11.74										
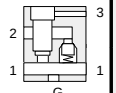		**B7*** 11.74									
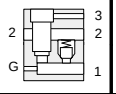		**B3*** 11.73									
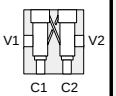		**YA*** 11.78									
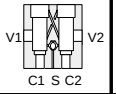		**YH*** 11.78									
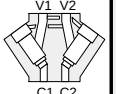		**WP*, VY*** 11.75 **XA*** 11.76									
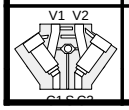		**XH*** 11.76				**NOTE: Line and sandwich bodies are available with SAE flange inlets and threaded port outlets. See pages 11.67 to 11.70.**					

11

LINE MOUNT BODY LOCATOR
Cavity Size: T–2A (Continued)

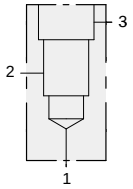

FUNCTIONS	
Vented Relief	Logic
Sequence	Pilot–to–Close Check
Reducing	
Counterbalance	
Pilot–to–Open Check	

Cartridge	RVEA	RSFC	SQFB	RSFE	SCEA	PBFB	PBFC	CBEA	CBEG	CBEH	CKEB
Page	1.18	2.06	2.08	2.10	2.12	3.06	3.08	4.10	4.12	4.14	4.16
Hydraulic Control Function	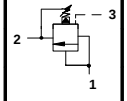		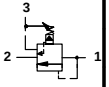	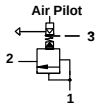			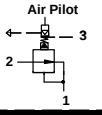	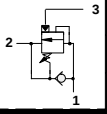	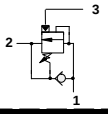	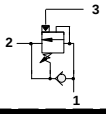	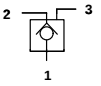

Cartridge	LOFC	LKFC	LPFC	LRFC	COFA						
Page	9.08	9.10	9.12	9.14	10.12						
Hydraulic Control Function	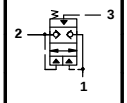	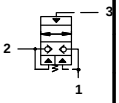	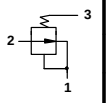	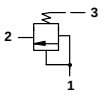	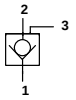						

Main Port Type	*MAIN PORT SIZE OPTIONS*										
SAE Flange											
NPTF Port	uo to .50	up to .75	up to .75	up to 1.0							
SAE Port	up to –8	up to –10	up to –12	up to –16							
BSPP Port	up to .50	up to .75	up to .75	up to 1.0							
Configuration	*Model No.*	*Model No.*	*Model No.*	*Model No.*	*Model No.*	*Model No.*	*Model No.*	*Model No.*	*Model No.*	*Model No.*	*Model No.*
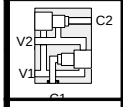	**YV*** 11.77										
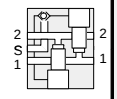				**XB*** 11.81							
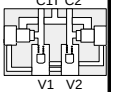			**BM*** 11.79								
			**BN*** 11.79								
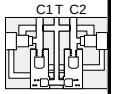			**BP*** 11.80								
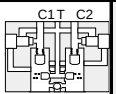			**BQ*** 11.80								
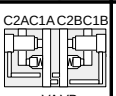		**B8*** 11.81									
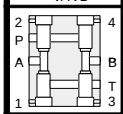			**YP*** 11.82								
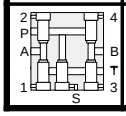			**YP*** 11.82			**NOTE: Line and sandwich bodies are available with SAE flange inlets and threaded port outlets. See pages 11.67 to 11.70.**					

11

LINE MOUNT BODY LOCATOR
Cavity Size: T–2A (High Capacity at Port 3)

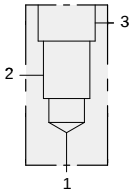

FUNCTIONS

Reducing/Relieving

Priority Flow Control

Directional Control

Cartridge	PPFB	PPFC	FRDA	DPCA	DPCB	DPCC	DPCD				
Page	3.10	3.12	6.02	8.06	8.07	8.08	8.09				
Hydraulic Control Function	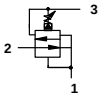	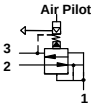		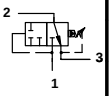	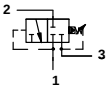	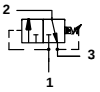	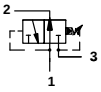				
Main Port Type	***MAIN PORT SIZE OPTIONS***										
SAE Flange											
NPTF Port	up to .75										
SAE Port	up to –12										
BSPP Port	up to .75										
Configuration	*Model No.*	*Model No.*	*Model No.*	*Model No.*	*Model No.*	*Model No.*	*Model No.*	*Model No.*	*Model No.*	*Model No.*	*Model No.*
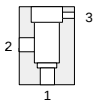	**BA*** 11.62										
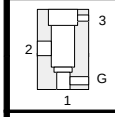	**BL*** 11.64										
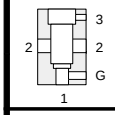	**WS*** 11.66										
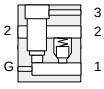	**B4*** 11.72										
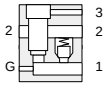	**B5*** 11.73										
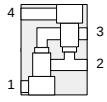	**VX*** 11.77										
						NOTE: Line and sandwich bodies are available with SAE flange inlets and threaded port outlets. See pages 11.67 to 11.70.					

11

LINE MOUNT BODY LOCATOR
Cavity Size: T–22A

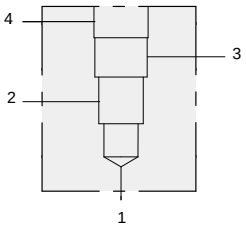

FUNCTIONS

- Vented Relief
- Reducing/Relieving with Drain
- Reducing/Relieving with Vent
- Vented Pilot–to–Open Check
- Vented Counterbalance
- Ventable Priority Flow Control
- Directional Control

Cartridge	RVED	PVFA	PVFB	CWEA	CWEG	CVEV	FVDA	DPCM	DPCN	DPCO	DPCP
Page	1.20	3.14	3.16	4.18	4.20	4.22	6.04	8.10	8.11	8.12	8.13
Hydraulic Control Function	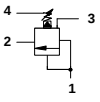	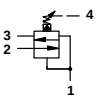	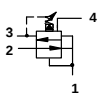	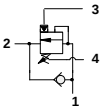	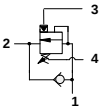	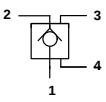	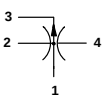	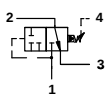	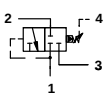	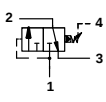	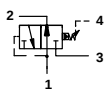
Main Port Type	***MAIN PORT SIZE OPTIONS***										
SAE Flange											
NPTF Port	up to .50	up to .75									
SAE Port	up to –8	up to –12									
BSPP Port	up to .50	up to .75									
Configuration	*Model No.*	*Model No.*	*Model No.*	*Model No.*	*Model No.*	*Model No.*	*Model No.*	*Model No.*	*Model No.*	*Model No.*	*Model No.*
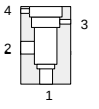		**NA*** 11.83									
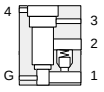		**N4*** 11.83									
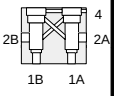		**XI*** 11.84									
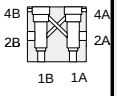		**XR*** 11.84									
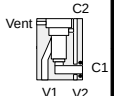	**WJ*** 11.85										
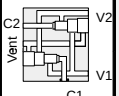	**VZ*** 11.85										

11

LINE MOUNT BODY LOCATOR
Cavity Size: T–32A

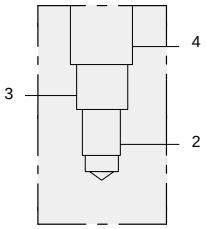

FUNCTIONS

Flow Divider

Flow Divider/Combiner

Low Side Shuttle

Cartridge	FSDD	FSDA	FSDS	FSDH	DSEH						
Page	7.08	7.10	7.12	7.14	10.06						
Hydraulic Control Function	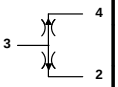	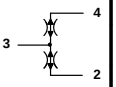	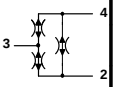	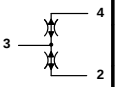	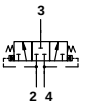						
Main Port Type	***MAIN PORT SIZE OPTIONS***										
SAE Flange											
NPTF Port	up to .75										
SAE Port	up to –12										
BSPP Port	.up to .75										
Configuration	*Model No.*	*Model No.*	*Model No.*	*Model No.*	*Model No.*	*Model No.*	*Model No.*	*Model No.*	*Model No.*	*Model No.*	*Model No.*
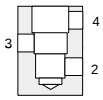	**NM*** 11.86										
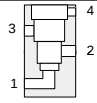	**NN*** 11.86										

11

LINE MOUNT BODY LOCATOR
Cavity Size: T–16A

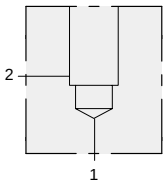

FUNCTIONS

Check — Flow Fuse

Flow Control — Relief

Cartridge	RPIC	RPIE	RDHA	RQIB	RPID	CXHA	CXGD	NFEC	CNGC	NCFB	NCFC
Page	1.07	1.09	1.11	1.13	1.15	5.09	5.11	5.13	5.15	5.17	5.19
Hydraulic Control Function				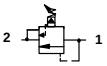	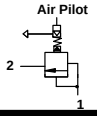	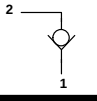	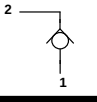		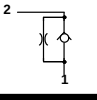	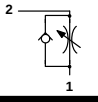	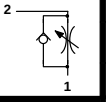

Cartridge	FXEA	FCEB	FDEA	FQGA
Page	5.21	5.23	5.25	10.15
Hydraulic Control Function	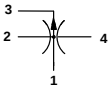			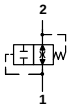

Main Port Type	*MAIN PORT SIZE OPTIONS*										
SAE Flange		1.0 C61	1.0 C62	1.25 C61	1.25 C62	1.5 C61	1.5 C62	2.0 C61	2.0 C62		
NPTF Port	up to 1.25										
SAE Port	up to –20										
BSPP Port	up to 1.25										
Configuration	*Model No.*	*Model No.*	*Model No.*	*Model No.*	*Model No.*	*Model No.*	*Model No.*	*Model No.*	*Model No.*	*Model No.*	*Model No.*
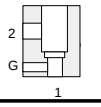	**IA*** 11.87	**IAP** 11.89	**IA4** 11.89	**IAQ** 11.90	**IA5** 11.90	**IAR** 11.91	**IA6** 11.91	**IAS** 11.93	**IA8** 11.93		
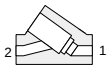	**IC*** 11.87	**ICP** 11.87									
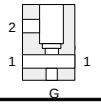	**IE*** 11.88	**IEP** 11.94	**IE4** 11.94	**IEQ** 11.95	**IE5** 11.95	**IER** 11.96	**IE6** 11.96	**IES** 11.97	**IE8** 11.97		
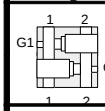	**YI*** 11.101					**YIR** 11.102	**YI6** 11.102	**YIS** 11.103	**YI8** 11.103		
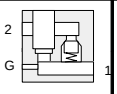	**IN*** 11.104	**INP** 11.105	**IN4** 11.105	**INQ** 11.106	**IN5** 11.106						
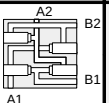	**YS*** 11.104										
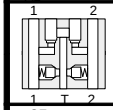	**IM*** 11.107										
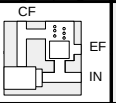	**WN*** 11.107										
						NOTE: Line and sandwich bodies are available with SAE flange inlets and threaded port outlets. See pages 11.98 to 11.100.					

11

LINE MOUNT BODY LOCATOR
Cavity Size: T–17A

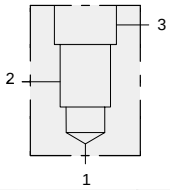

FUNCTIONS

Vented Relief	Logic
Sequence	Pilot–to–Close Check
Reducing	
Counterbalance	
Pilot–to–Open Check	

Cartridge	RVGA	RSHC	SQHB	RSHE	SCGA	PBHB	PBHC	CBGA	CBGG	CBGH	CKGB
Page	1.19	2.07	2.09	2.11	2.13	3.07	3.09	4.11	4.13	4.15	4.17
Hydraulic Control Function	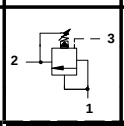	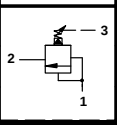	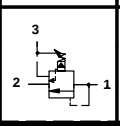	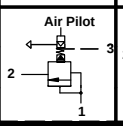	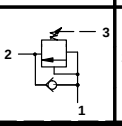	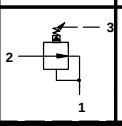	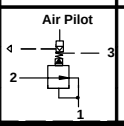	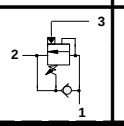	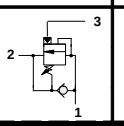	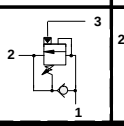	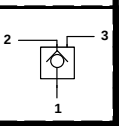

Cartridge	LOHC	LKHC	LPHC	LRHC	COHA
Page	9.09	9.11	9.13	9.15	10.13
Hydraulic Control Function	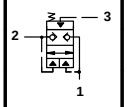	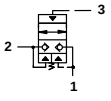	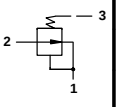	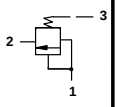	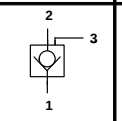

Main Port Type	*MAIN PORT SIZE OPTIONS*										
SAE Flange				.75 C61	.75 C62	1.0 C61	1.0 C62	1.25C61	1.25C62		
NPTF Port	up to .75	up to 1.0	up to 1.25								
SAE Port	up to –12	up to –16	up to –20								
BSPP Port	up to .75	up to 1.0	up to 1.25								
Configuration	*Model No.*	*Model No.*	*Model No.*	*Model No.*	*Model No.*	*Model No.*	*Model No.*	*Model No.*	*Model No.*	*Model No.*	*Model No.*
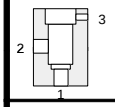			**HC*** 11.108			**HCP** 11.114	**HC4** 11.114	**HCQ** 11.115	**HC5** 11.115		
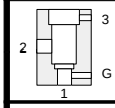			**HF*** 11.108			**HFP** 11.116	**HF4** 11.116	**HFQ** 11.117	**HF5** 11.117		
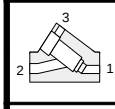		**HD*** 11.109									
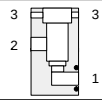				**WGL** 11.128	**WNG** 11.128	**ZNW** 11.129	**ZDR** 11.129	**ZJY** 11.130			
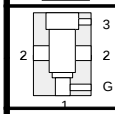		**WS*, WT*** 11.111									
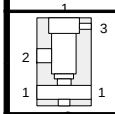		**HH*** 11.110				**HHP** 11.120	**HH4** 11.120	**HHQ** 11.121	**HH5** 11.121		
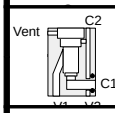	**ZT*** 11.112										
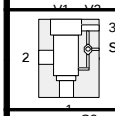			**HG*** 11.123			**HGP** 11.123		**HGQ** 11.124	**HG5** 11.124		
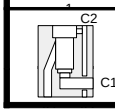	**ZRN, ZTW** 11.122					**NOTE: Line and sandwich bodies are available with SAE flange inlets and threaded port outlets. See page 11.125 to 11.130.**					

11

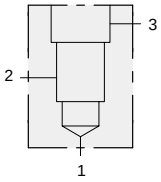

FUNCTIONS

Vented Relief	Logic
Sequence	Pilot–to–Close Check
Reducing	
Counterbalance	
Pilot–to–Open Check	

Cartridge	RVGA	RSHC	SQHB	RSHE	SCGA	PBHB	PBHC	CBGA	CBGG	CBGH	CKGB
Page	1.19	2.07	2.09	2.11	2.13	3.07	3.09	4.11	4.13	4.15	4.17
Hydraulic Control Function	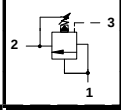	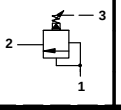	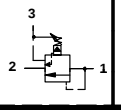	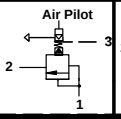	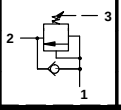	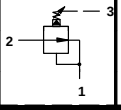	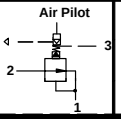	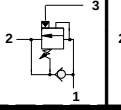	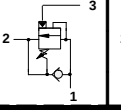	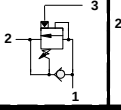	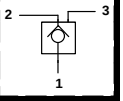

Cartridge	LOHC	LKHC	LPHC	LRHC	COHA
Page	9.09	9.11	9.13	9.15	10.13
Hydraulic Control Function	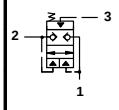	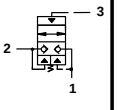	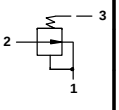	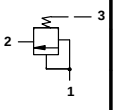	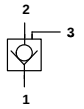

Main Port Type	*MAIN PORT SIZE OPTIONS*										
SAE Flange			1.0 C61	1.0 C62	1.25 C61	1.25 C62					
NPTF Port	up to .75	up to 1.25									
SAE Port	up to –16	up to –20									
BSPP Port	up to .75	up to 1.25									
Configuration	*Model No.*	*Model No.*	*Model No.*	*Model No.*	*Model No.*	*Model No.*	*Model No.*	*Model No.*	*Model No.*	*Model No.*	*Model No.*
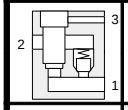			**H2P** 11.140	**H24** 11.140	**H2Q** 11.142	**H25** 11.142					
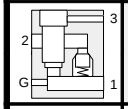		**H6*** 11.138		**H64** 11.137		**H65** 11.137					
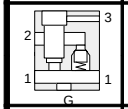		**H7*** 11.138									
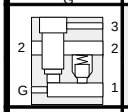		**H3*** 11.138	**H3P** 11.141								
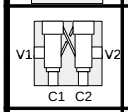		**YJ*** 11.131	**YJP** 11.132		**YJQ** 11.132						
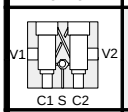		**YK*** 11.131	**YKP** 11.133		**YKQ** 11.133						
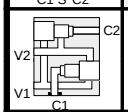	**YV*** 11.113										
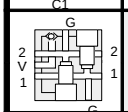		**XC*** 11.147	**XCP** 11.148	**XC4** 11.148	**XCQ** 11.149	**XC5** 11.149					
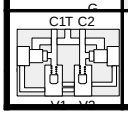		**HM*** 11.134				**NOTE: Line and sandwich bodies are available with SAE flange inlets and threaded port outlets. See page 11.125 to 11.130.**					

LINE MOUNT BODY LOCATOR
Cavity Size: T–17A (Continued)

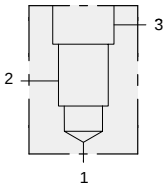

FUNCTIONS

Vented Relief	Logic
Sequence	Pilot–to–Close Check
Reducing	
Counterbalance	
Pilot–to–Open Check	

Cartridge	RVGA	RSHC	SQHB	RSHE	SCGA	PBHB	PBHC	CBGA	CBGG	CBGH	CKGB
Page	1.19	2.07	2.09	2.11	2.13	3.07	3.09	4.11	4.13	4.15	4.17
Hydraulic Control Function	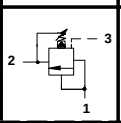	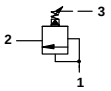	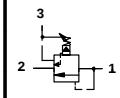	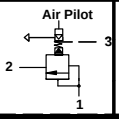	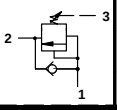	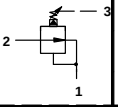	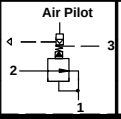	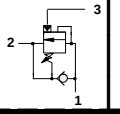	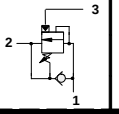	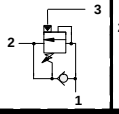	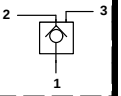

Cartridge	LOHC	LKHC	LPHC	LRHC	COHA
Page	9.09	9.11	9.13	9.15	10.13
Hydraulic Control Function	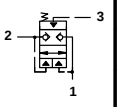	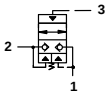	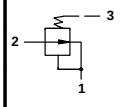	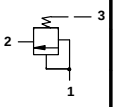	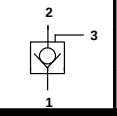

Main Port Type	***MAIN PORT SIZE OPTIONS***										
SAE Flange		1.0 C61		1.25 C61							
NPTF Port	up to 1.25										
SAE Port	up to –20										
BSPP Port	up to 1.25										

Configuration	*Model No.*	*Model No.*	*Model No.*	*Model No.*	*Model No.*	*Model No.*	*Model No.*	*Model No.*	*Model No.*	*Model No.*	*Model No.*
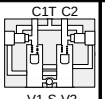	**HN*** 11.134										
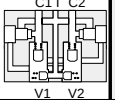	**HP*** 11.135										
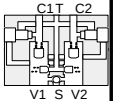	**HQ*** 11.135										
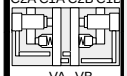	**H8*** 11.136										
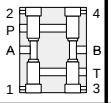	**YR*** 11.144	**YRH** 11.145		**YRF** 11.145							
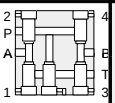	**YQ*** 11.144	**YQH** 11.146		**YQF** 11.146							
						NOTE: Line and sandwich bodies are available with SAE flange inlets and threaded port outlets. See page 11.125 to 11.130.					

11

LINE MOUNT BODY LOCATOR
Cavity Size: T–17A (High Capacity Port 3)

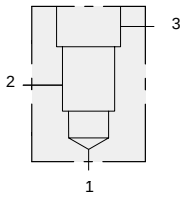

FUNCTIONS

Reducing/Relieving

Priority Flow Control

Cartridge	**PPHB**	**PPHC**	**FREA**								
Page	3.11	3.13	6.03								
Hydraulic Control Function	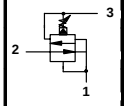	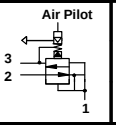									
Main Port Type	***MAIN PORT SIZE OPTIONS***										
SAE Flange		1.0 C61	1.0 C62	1.25 C61	1.25 C62						
NPTF Port	up to 1.25										
SAE Port	up to –20										
BSPP Port	up to 1.25										
Configuration	*Model No.*	*Model No.*	*Model No.*	*Model No.*	*Model No.*	*Model No.*	*Model No.*	*Model No.*	*Model No.*	*Model No.*	*Model No.*
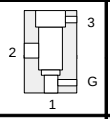	**HE*** 11.109	**HEP** 11.118	**HE4** 11.118	**HEQ** 11.119	**HE5** 11.119						
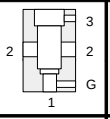	**WT*** 11.111										
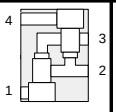	**VX*** 11.130										
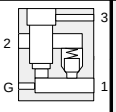	**H4*** 11.139			**H4Q** 11.143	**H45** 11.143						

11

LINE MOUNT BODY LOCATOR
Cavity Size: T–23A

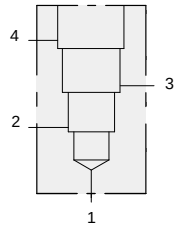

FUNCTIONS	
Vented Relief	Vented Counterbalance
Reducing/Relieving with Drain	Vented Pilot–to–Open Check
Reducing/Relieving with Vent	Ventable Priority Flow Control

Cartridge	RVGD	PVHA	PVHB	CWGA	CWGG	CVGV	FVEA				
Page	1.21	3.15	3.17	4.19	4.21	4.23	6.05				
Hydraulic Control Function	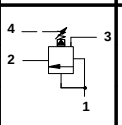	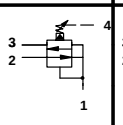	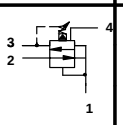	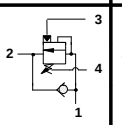	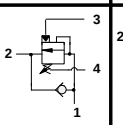	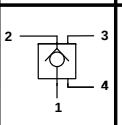	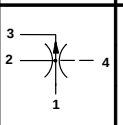				
Main Port Type	***MAIN PORT SIZE OPTIONS***										
SAE Flange		1.0 C61	1.0 C62	1.25 C61	1.25 C62						
NPTF Port	up to 1.25										
SAE Port	up to –20										
BSPP Port	up to 1.25										
Configuration	*Model No.*	*Model No.*	*Model No.*	*Model No.*	*Model No.*	*Model No.*	*Model No.*	*Model No.*	*Model No.*	*Model No.*	*Model No.*
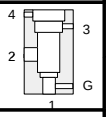	**PA*** 11.150	**PAP** 11.151	**PA4** 11.151	**PAQ** 11.153	**PA5** 11.153						
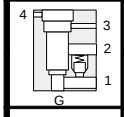	**P4*** 11.159	**P4P** 11.160	**P44** 11.160	**P4Q** 11.161	**P45** 11.161						
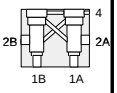	**XM*** 11.154	**XMP** 11.155	**XM4** 11.155	**XMQ** 11.156	**XM5** 11.156						
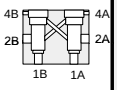	**VA*** 11.154	**VAP** 11.157	**VA4** 11.157	**VAQ** 11.158	**VA5** 11.158						
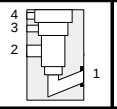			**WHA** 11.152								

11

LINE MOUNT BODY LOCATOR
Cavity Size: T–33A

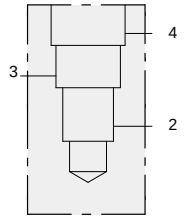

FUNCTIONS

Flow Divider

Flow Divider/Combiner

Low Side Shuttle

Cartridge	FSED	FSEA	FSES	FSEH	DSGH						
Page	7.09	7.11	7.13	7.15	10.07						
Hydraulic Control Function	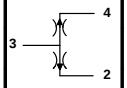	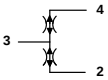	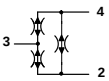	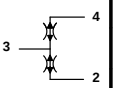	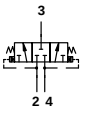						
Main Port Type	***MAIN PORT SIZE OPTIONS***										
SAE Flange		1.0 C61	1.0 C62	1.25 C61	1.25 C62						
NPTF Port	up to 1.25										
SAE Port	up to –20										
BSPP Port	up to 1.25										
Configuration	*Model No.*	*Model No.*	*Model No.*	*Model No.*	*Model No.*	*Model No.*	*Model No.*	*Model No.*	*Model No.*	*Model No.*	*Model No.*
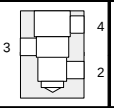	**PM*** 11.162	**PMP** 11.164	**PM4** 11.164	**PMQ** 11.165	**PM5** 11.165						
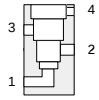	**PN*** 11.163										

11

LINE MOUNT BODY LOCATOR
Cavity Size: T–18A

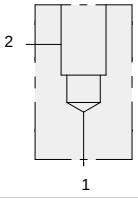

FUNCTIONS

Relief
Check
Flow Control
Flow Fuse

Cartridge	RPKC	RPKE	RDJA	RQKB	RPKD	CXJA	CXID	NFFC	CNIC	NCGB	NCGC
Page	1.07	1.09	1.11	1.13	1.15	5.09	5.11	5.13	5.15	5.17	5.19
Hydraulic Control Function			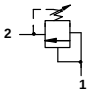	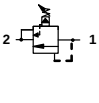	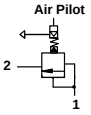			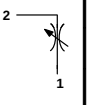			

Cartridge	FXFA	FCFB	FDFA	FQIA
Page	5.21	5.23	5.25	10.15
Hydraulic Control Function	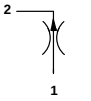	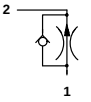	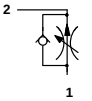	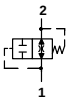

Main Port Type	MAIN PORT SIZE OPTIONS										
SAE Flange		1.0 C61	1.0 C62	1.25 C61	1,25 C62	1.50 C61	1.50 C62	2.0 C61	2.0 C62		
NPTF Port	up to 1.25										
SAE Port	up to –20										
BSPP Port	up to 1.25										
Configuration	Model No.	Model No.	Model No.	Model No.	Model No.	Model No.	Model No.	Model No.	Model No.	Model No.	Model No.
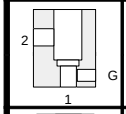	**LA*** 11.167	**LAP** 11.167	**LA4** 11.167	**LAQ** 11.168	**LA5** 11.168	**LAR** 11.169	**LA6** 11.169	**LAS** 11.170	**LA8** 11.170		
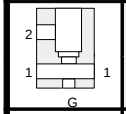	**LE*** 11.166	**LEP** 11.172	**LE4** 11.172	**LEQ** 11.173	**LE5** 11.173	**LER** 11.174	**LE6** 11.174	**LES** 11.175	**LE8** 11.175		
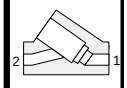						**ZLS** 11.171		**ZLR** 11.171			
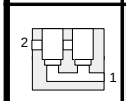								**XZY** 11.179			
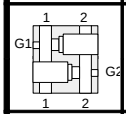						**YLR** 11.180	**YL6** 11.180	**YLS** 11.181	**YL8** 11.181		
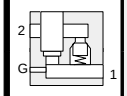	**LN*** 11.182			**LNQ** 11.183	**LN5** 11.183	**LNR** 11.184	**LN6** 11.184	**LNS** 11.185	**LN8** 11.185		
						NOTE: Line and sandwich bodies are available with SAE flange inlets and threaded port outlets. See pages 11.176 to 11.178.					

11

LINE MOUNT BODY LOCATOR
Cavity Size: T–19A

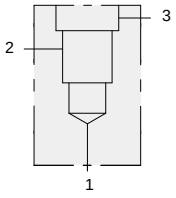

FUNCTIONS

Vented Relief	Logic
Sequence	Pilot–to–Open Check
Reducing	Pilot–to–Close Check
Counterbalance	

Cartridge	RVIA	RSJC	SQJB	RSJE	SCIA	PBJB	PBJC	CBIA	CBIG	CBIH	CKIB
Page	1.19	2.07	2.09	2.11	2.13	3.07	3.09	4.11	4.13	4.15	4.17
Hydraulic Control Function	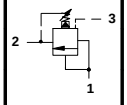	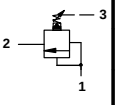	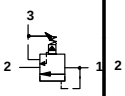	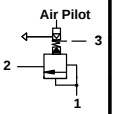	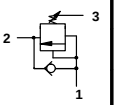	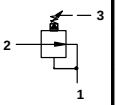	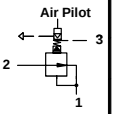	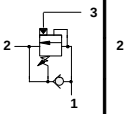	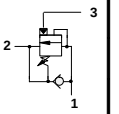	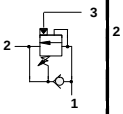	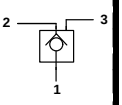

Cartridge	LOJC	LKJC	LPJC	LRJC	COJA
Page	9.09	9.11	9.13	9.15	10.13
Hydraulic Control Function	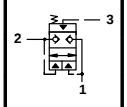	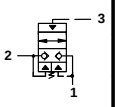	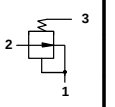	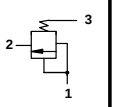	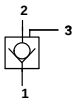

Main Port Type	*MAIN PORT SIZE OPTIONS*										
SAE Flange		1.0 C61	1.0 C62	1.25 C61	1.25 C62	1.50 C61	1.50 C62	2.0 C61	2,0 C62		
NPTF Port	up to 1.25										
SAE Port	up to –20										
BSPP Port	up to 1.25										
Configuration	*Model No.*	*Model No.*	*Model No.*	*Model No.*	*Model No.*	*Model No.*	*Model No.*	*Model No.*	*Model No.*	*Model No.*	*Model No.*
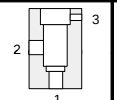	**KC*** 11.186	**KCP** 11.190	**KC4** 11.190	**KCQ** 11.192	**KC5** 1.192	**KCR** 11.195	**KC6** 11.195	**KCS** 11.198	**KC8** 11.198		
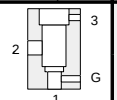	**KF*** 11.186	**KFP** 11.191	**KF4** 11.191	**KFQ** 11.191	**KF5** 11.193	**KFR** 11.196	**KF6** 11.196	**KFS** 11.199	**KF8** 11.199		
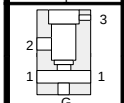	**KH*** 11.187	**KHP** 11.201	**KH4** 11.201	**KHQ** 11.202	**KH5** 11.202	**KHR** 11.203	**KH6** 11.203	**KHS** 11.204	**KH8** 11.204		
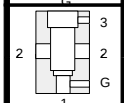	**WT*** 11.188										
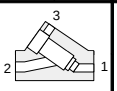						**ZLQ** 11.189		**ZLP** 11.189			
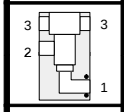				**ZNX** 11.205	**ZFD** 11.205	**ZNY** 11.206	**ZDQ** 11.206				
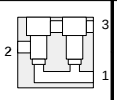								**XZZ,XVD** 11.211			
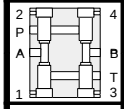						**YRD** 11.212		**YRC** 11.213			
						NOTE: Line and sandwich bodies are available with SAE flange inlets and threaded port outlets. See pages 11.207 to 11.210.					

11

LINE MOUNT BODY LOCATOR
Cavity Size: T–19A (Continued)

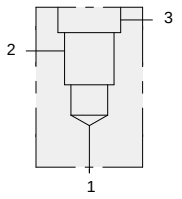

FUNCTIONS

Vented Relief	Logic
Sequence	Pilot–to–Open Check
Reducing	Pilot–to–Close Check
Counterbalance	

Cartridge	RVIA	RSJC	SQJB	RSJE	SCIA	PBJB	PBJC	CBIA	CBIG	CBIH	CKIB
Page	1.19	2.07	2.09	2.11	2.13	3.07	3.09	4.11	4.13	4.15	4.17
Hydraulic Control Function	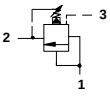	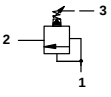	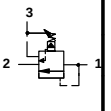	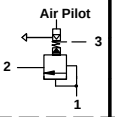	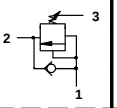	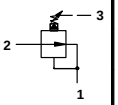	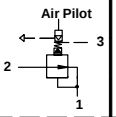	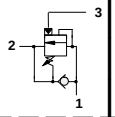	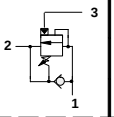	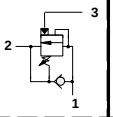	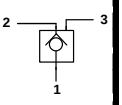

Cartridge	LOJC	LKJC	LPJC	LRJC	COJA						
Page	9.09	9.11	9.13	9.15	10.13						
Hydraulic Control Function	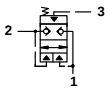	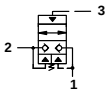	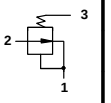	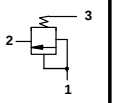	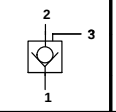						

Main Port Type	*MAIN PORT SIZE OPTIONS*										
SAE Flange		1.25 C61	1.25 C62	1.50 C61	1.50 C62	2.0 C61	2.0 C62				
NPTF Port	up to 1.25										
SAE Port	up to –20										
BSPP Port	up to 1.25										
Configuration	*Model No.*	*Model No.*	*Model No.*	*Model No.*	*Model No.*	*Model No.*	*Model No.*	*Model No.*	*Model No.*	*Model No.*	*Model No.*
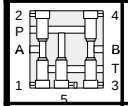				**YQD** 11.212		**YQC** 11.213					
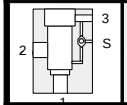				**KGR** 11.214	**KG6** 11.214	**KGS** 11.215	**KG8** 11.215				
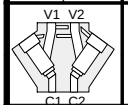				**XZP** 11.216		**XZR** 11.217					
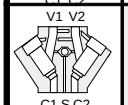				**XZQ** 11.216		**XZS** 11.217					
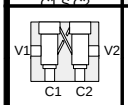				**YMR** 11.218	**YM6** 11.219	**YMS** 11.220					
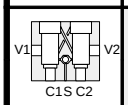				**YNR** 11.218	**YN6** 11.219	**YNS** 11.220					
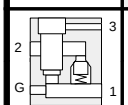	**K6*** 11.221	**K6Q** 11.222	**K65** 11.222	**K6R** 11.223	**K66** 11.223	**K6S** 11.224	**K68** 11.224				
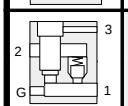	**K2*** 11.225	**K2Q** 11.226	**K25** 11.226	**K2R** 11.227	**K26** 11.227	**K2S** 11.230	**K28** 11.230				
						NOTE: Line and sandwich bodies are available with SAE flange inlets and threaded port outlets. See pages 11.207 to 11.210.					

11

LINE MOUNT BODY LOCATOR
Cavity Size: T–19A (High Capacity Port 3)

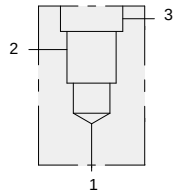

FUNCTIONS

Reducing/Relieving

Priority Flow Control

Cartridge	**PPJB**	**PPJC**	**FRFA**								
Page	3.11	3.13	6.03								
Hydraulic Control Function	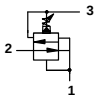	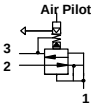									
Main Port Type	***MAIN PORT SIZE OPTIONS***										
SAE Flange		1.25 C61	1.25 C62	1.50 C61	1.50 C62	2.0 C61	2.0 C62				
NPTF Port	up to 1.25										
SAE Port	up to –20										
BSPP Port	up to 1.25										
Configuration	*Model No.*	*Model No.*	*Model No.*	*Model No.*	*Model No.*	*Model No.*	*Model No.*	*Model No.*	*Model No.*	*Model No.*	*Model No.*
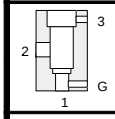	**KH*** 11.187	**KEQ** 11.194	**KE5** 11.194	**KER** 11.197	**KE6** 11.197	**KES** 11.200	**KE8** 11.200				
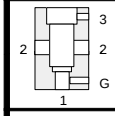	**WT*** 11.188										
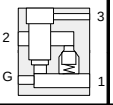	**K2*** 11.225			**K4R** 11.228	**K46** 11.288	**K4S** 11.229	**K48** 11.229				

11

LINE MOUNT BODY LOCATOR
Cavity Size: T–24A

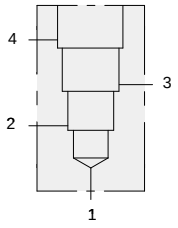

FUNCTIONS

Vented Relief	Vented Counterbalance
Reducing/Relieving with Drain	Vented Pilot–to–Open Check
Reducing/Relieving with Vent	Ventable Priority Flow Control

Cartridge	RVID	PVJA	PVJB	CWIA	CWIG	CVIV	FVFA				
Page	1.21	3.15	3.17	4.19	4.21	4.23	6.05				
Hydraulic Control Function	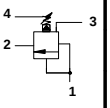		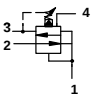	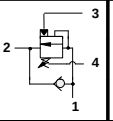	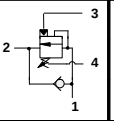	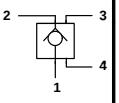	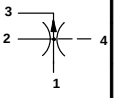				
Main Port Type	***MAIN PORT SIZE OPTIONS***										
SAE Flange		1.0 C61	1.0 C62	1.25 C61	1.25 C62	1.50 C61	1.50 C62	2.0 C61	2.0 C62		
NPTF Port	up to 1.25										
SAE Port	up to –20										
BSPP Port	up to 1.25										
Configuration	*Model No.*	*Model No.*	*Model No.*	*Model No.*	*Model No.*	*Model No.*	*Model No.*	*Model No.*	*Model No.*	*Model No.*	*Model No.*
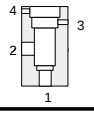	**QC*** 11.231			**QCQ** 11.232	**QC5** 11.232	**QCR** 11.233	**QC6** 11.233	**QCS** 11.234	**QC8** 11.234		
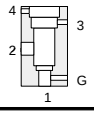	**QA*** 11.231			**QAQ** 11.235	**QA5** 11.235	**QAR** 11.236	**QA6** 11.236	**QAS** 11.237	**QA8** 11.237		
			**WGY** 11.238		**WGZ** 11.238		**WGT** 11.239				
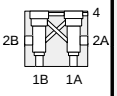	**XL*** 11.240					**XLR** 11.241	**XL6** 11.241	**XLS** 11.242	**XL8** 11.242		
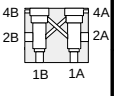	**XS*** 11.240					**XSR** 11.243	**XS6** 11.243	**XSS** 11.244	**XS8** 11.244		
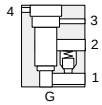	**Q4*** 11.245					**Q4R** 11.246	**Q46** 11.246	**Q4S** 11.247	**Q48** 11.247		

LINE MOUNT BODY LOCATOR
Cavity Size: T–34A

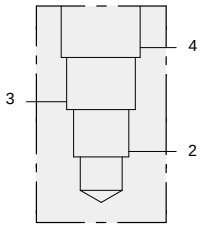

FUNCTIONS

Flow Divider

Flow Divider/Combiner

Low Side Shuttle

Cartridge	**FSFD**	**FSFA**	**FSFS**	**FSFH**	**DSIH**						
Page	7.09	7.11	7.13	7.15	10.07						
Hydraulic Control Function	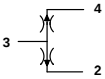	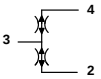	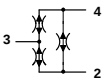	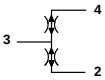	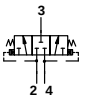						
Main Port Type	***MAIN PORT SIZE OPTIONS***										
SAE Flange		1.0 C61	1.0 C62	1.25 C61	1.25 C62	1.50 C61	1.50 C62				
NPTF Port	up to 1.25										
SAE Port	up to –20										
BSPP Port	up to 1.25										
Configuration	*Model No.*	*Model No.*	*Model No.*	*Model No.*	*Model No.*	*Model No.*	*Model No.*	*Model No.*	*Model No.*	*Model No.*	*Model No.*
	**QM*** 11.248	**QMP** 11.249	**QM4** 11.249	**QMQ** 11.250	**QM5** 11.250	**QMR** 11.251	**QM6** 11.251				
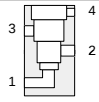	**QN*** 11.248										

11

Sun offers many single and multiple cavity standard line mount manifolds, and many sandwich, motor mount bodies and subplates that are available in a choice of aluminum (3000 psi/210 bar) or ductile iron (5000 psi/350 bar). Ports include NPTF, SAE, BSPP and Code 61 and Code 62 flanges.

Go to www.sunhydraulics.com. *Example:* **Click Product: Manifolds: Line Mount: Flow Controls: Inline:** and a pop-up menu shows all the available **SAE Ported Bodies** within your selection (see below). When you click the body in the appropriate Cavity column, the **body page will show all measurements, Technical Data and full orientation views of all body faces.** See Technical Information section of web site for additional information.

Please hover over the manifolds in order to view porting information.

Port Size	T-162A	T-13A	T-5A	T-16A	T-18A
1/4" NPTF		GCA			
1/4" NPTF	ACA	GCA/S			
1/4" NPTF	ACA/S				
3/8" NPTF		GCB			
3/8" NPTF	ACB	GCB/S			
3/8" NPTF	ACB/S		DCB		
3/8" NPTF			DCB/S		
1/2" NPTF		GCC			
1/2" NPTF		GCC/S	DCC		
1/2" NPTF			DCC/S		
3/4" NPTF				ICD	
3/4" NPTF			VFJ	ICD/S	
3/4" NPTF			VFJ/S		
1" NPTF				ICE	
1" NPTF			VFK	ICE/S	
1" NPTF			VFK/S		
1 1/4" NPTF				ICF	
1 1/4" NPTF			VFL	ICF/S	
1 1/4" NPTF			VFL/S		
SAE 4		GCH			
SAE 4	ACH	GCH/S			
SAE 4	ACH/S				
SAE 6		GCI			
SAE 6	ACI	GCI/S			
SAE 6	ACI/S		DCI		
SAE 6			DCI/S		
SAE 8		GCJ			
SAE 8		GCJ/A			
SAE 8		GCJ/S	DCJ		
SAE 8			DCJ/S		
SAE 10			DCK		
SAE 10			DCK/S		
SAE 12				ICL	

Sun offers many single and multiple cavity standard line mount manifolds, and many sandwich, motor mount bodies and subplates that are available in a choice of aluminum (3000 psi/210 bar) or ductile iron (5000 psi/350 bar). Ports include NPTF, SAE, BSPP and Code 61 and Code 62 flanges.

Go to www.sunhydraulics.com. *Example:* **Click Product: Manifolds: Line Mount: Flow Controls: Inline:** and a pop-up menu shows all the available **SAE Ported Bodies** within your selection (see below). When you click the body in the appropriate Cavity column, the **body page will show all measurements, Technical Data and full orientation views of all body faces.** See Technical Information section of web site for additional information.

Please hover over the manifolds in order to view porting information.

Port Size	T-162A	T-13A	T-5A	T-16A	T-18A
1/4" NPTF		GCA			
1/4" NPTF	ACA	GCA/S			
1/4" NPTF	ACA/S				
3/8" NPTF		GCB			
3/8" NPTF	ACB	GCB/S			
3/8" NPTF	ACB/S		DCB		
3/8" NPTF			DCB/S		
1/2" NPTF		GCC			
1/2" NPTF		GCC/S	DCC		
1/2" NPTF			DCC/S		
3/4" NPTF				ICD	
3/4" NPTF			VFJ	ICD/S	
3/4" NPTF			VFJ/S		
1" NPTF				ICE	
1" NPTF			VFK	ICE/S	
1" NPTF			VFK/S		
1 1/4" NPTF				ICF	
1 1/4" NPTF			VFL	ICF/S	
1 1/4" NPTF			VFL/S		
SAE 4		GCH			
SAE 4	ACH	GCH/S			
SAE 4	ACH/S				
SAE 6		GCI			
SAE 6	ACI	GCI/S			
SAE 6	ACI/S		DCI		
SAE 6			DCI/S		
SAE 8		GCJ			
SAE 8		GCJ/A			
SAE 8		GCJ/S	DCJ		
SAE 8			DCJ/S		
SAE 10			DCK		
SAE 10			DCK/S		
SAE 12				ICL	

LINE MOUNT BODIES

- Aluminium rated to 210 bar and SG Iron rated to 350 bar.

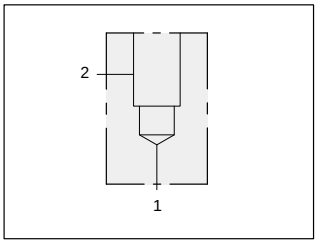

90 degree body.

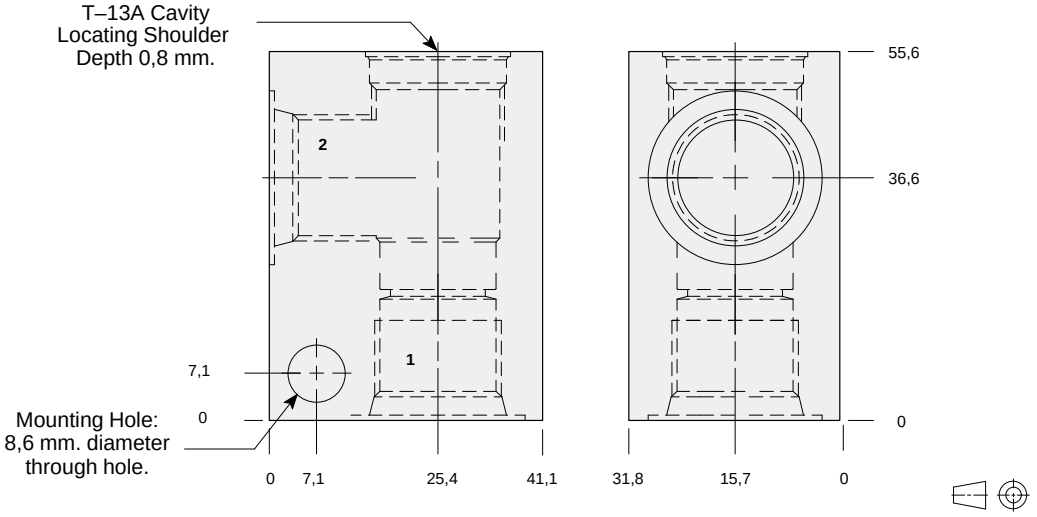

TYPICAL CARTRIDGES USED WITH THIS BODY

CXDA - ***	Page	5.08
CXCD - ***	Page	5.10
NFCC - ***	Page	5.12
CNCC - ***	Page	5.14
NCCB - ***	Page	5.16
NCCC - ***	Page	5.18
FXCA - ***	Page	5.20
FCCB - ***	Page	5.22
FDBA - ***	Page	5.24
CSAA - ***	Page	10.09
CSAC - ***	Page	10.09
CDAA - ***	Page	10.11
CDAC - ***	Page	10.11
FQCA - ***	Page	10.14

Instructions for ordering complete cartridge and body assemblies. Page viii

Pressure ratings, material specifications. Page 11.02

Ports 1 & 2	ALUMINIUM		SG IRON	
	Model Code	*List Price*	*Model Code*	*List Price*
.25 NPTF	**GAA**		**GAA/S**	
.375 NPTF	**GAB**		**GAB/S**	
SAE-4	**GAH**		**GAH/S**	
SAE-6	**GAI**		**GAI/S**	
SAE-8	**GAJ**		**GAJ/S**	
.25 BSPP	**GAT**		**GAT/S**	
.375 BSPP	**GAU**		**GAU/S**	

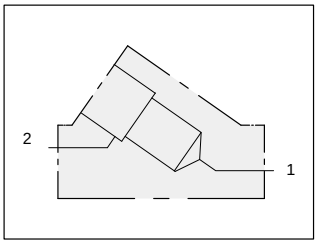

Inline body.

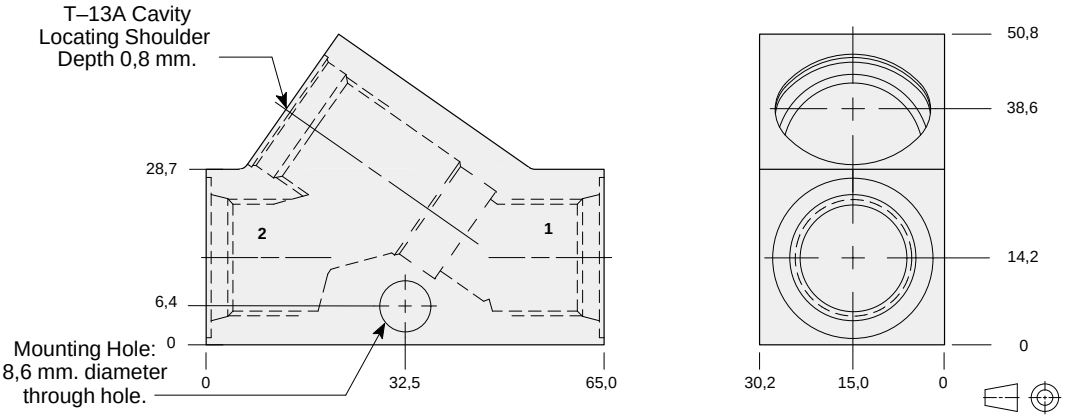

TYPICAL CARTRIDGES USED WITH THIS BODY

CXDA - ***	Page	5.08
CXCD - ***	Page	5.10
NFCC - ***	Page	5.12
CNCC - ***	Page	5.14
NCCB - ***	Page	5.16
NCCC - ***	Page	5.18
FXCA - ***	Page	5.20
FCCB - ***	Page	5.22
FDBA - ***	Page	5.24
CSAA - ***	Page	10.09
CSAC - ***	Page	10.09
CDAA - ***	Page	10.11
CDAC - ***	Page	10.11
FQCA - ***	Page	10.14

Instructions for ordering complete cartridge and body assemblies. Page viii

Pressure ratings, material specifications. Page 11.02

Ports 1 & 2	ALUMINIUM		SG IRON	
	Model Code	*List Price*	*Model Code*	*List Price*
.25 NPTF	**GCA**		**GCA/S**	
.375 NPTF	**GCB**		**GCB/S**	
SAE-4	**GCH**		**GCH/S**	
SAE-6	**GCI**		**GCI/S**	
SAE-8	**GCJ**		**GCJ/S**	
.25 BSPP	**GCT**		**GCT/S**	
.375 BSPP	**GCU**		**CGU/S**	

LINE MOUNT BODIES

- Aluminium rated to 210 bar and SG Iron rated to 350 bar.

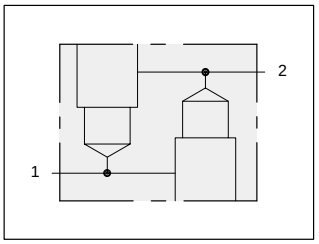

Two cavity inline body.

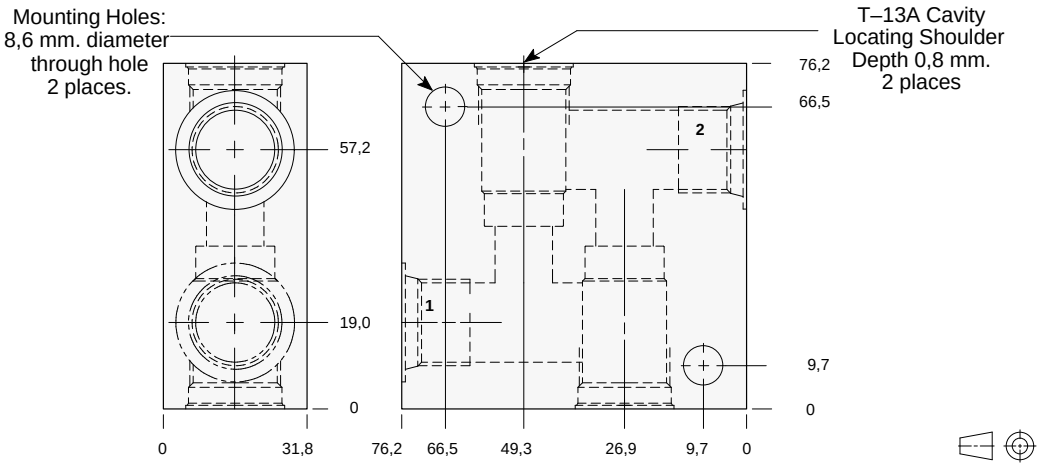

TYPICAL CARTRIDGES USED WITH THIS BODY

CXDA - *** Page 5.08
NFCC - *** Page 5.12
FXCA - *** Page 5.20

Instructions for ordering complete cartridge and body assemblies. Page viii

Pressure ratings, material specifications. Page 11.02

Ports 1 & 2	ALUMINIUM		SG IRON	
	Model Code	*List Price*	*Model Code*	*List Price*
.25 NPTF	**XWL**		**XWL/S**	
.375 NPTF	**XWM**		**XWM/S**	
SAE-6	**XWN**		**XWN/S**	
SAE-8	**XWP**		**XWP/S**	
.25 BSPP	**XWQ**		**XWQ/S**	
.375 BSPP	**XWR**		**XWR/S**	

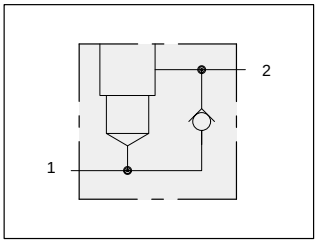

Inline body with reverse free flow check.

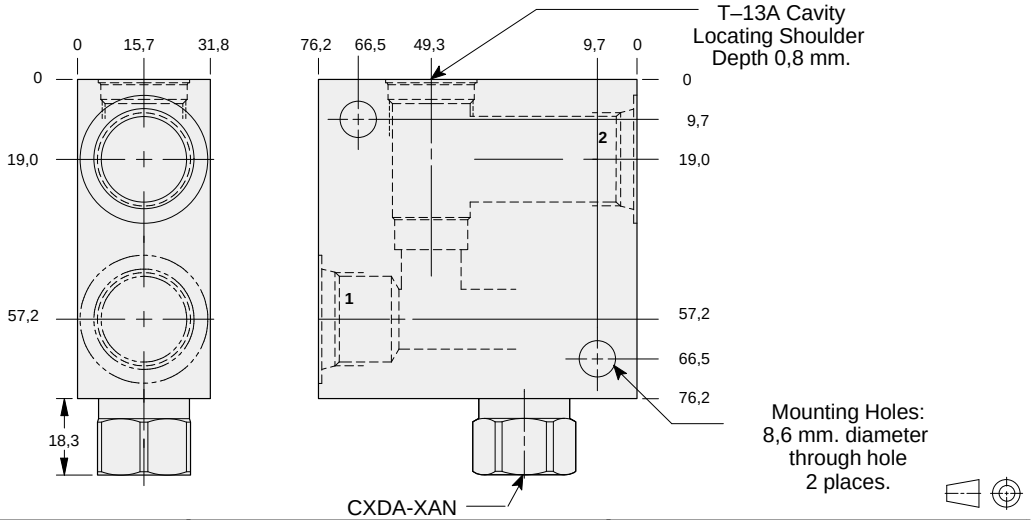

TYPICAL CARTRIDGES USED WITH THIS BODY

NFCC - *** Page 5.12
FXCA - *** Page 5.20

Cartridge seal type determines check valve seal type.

Instructions for ordering complete cartridge and body assemblies. Page viii

Pressure ratings, material specifications. Page 11.02

Ports 1 & 2	ALUMINIUM		SG IRON	
	Model Code	*List Price*	*Model Code*	*List Price*
.25 NPTF	**GNL**		**GNL/S**	
.375 NPTF	**GNM**		**GNM/S**	
SAE-6	**GNN**		**GNN/S**	
SAE-8	**GNP**		**GNP/S**	
.25 BSPP	**GNQ**		**GNQ/S**	
.375 BSPP	**GNR**		**GNR/S**	

LINE MOUNT BODIES

- Aluminium rated to 210 bar and SG Iron rated to 350 bar.

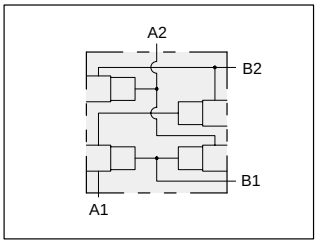

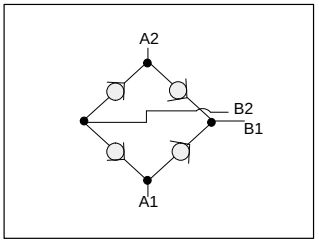

Rectifier body.

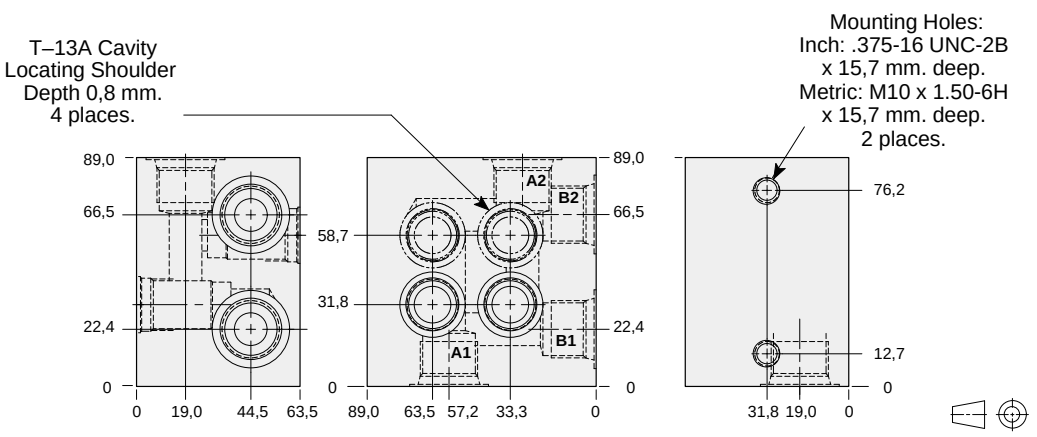

TYPICAL CARTRIDGES USED WITH THIS BODY

CXDA - *** Page 5.08

Instructions for ordering complete cartridge and body assemblies. Page viii

Pressure ratings, material specifications. Page 11.02

Mounting Hole Dimensions	*Ports 1 & 2*	ALUMINIUM		SG IRON	
		Model Code	*List Price*	*Model Code*	*List Price*
Inch	.25 NPTF	**YSR**		**YSE/S**	
Inch	.375 NPTF	**YSS**		**YSS/S**	
Inch	.50 NPTF	**YST**		**YST/S**	
Inch	SAE-6	**YSU**		**YSU/S**	
Inch	SAE-8	**YSV**		**YSV/S**	
Inch	SAE-10	**YSW**		**YSW/S**	
Metric	.25 BSPP	**YSX**		**YSX/S**	
Metric	.375 BSPP	**YSY**		**YSY/S**	
Metric	.50 BSPP	**YSZ**		**YSZ/S**	

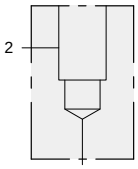

90 degree body.

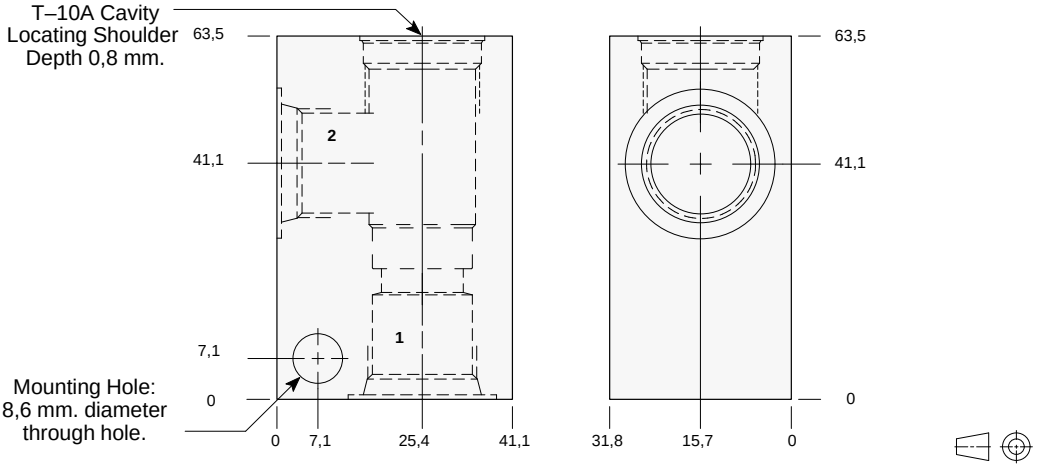

TYPICAL CARTRIDGES USED WITH THIS BODY

RPEC - *** Page 1.06
RPEE - *** Page 1.08
RDDA - *** Page 1.10
RQEB - *** Page 1.12
RBAC - *** Page 1.16

Instructions for ordering complete cartridge and body assemblies. Page viii

Pressure ratings, material specifications. Page 11.02

Ports 1 & 2	ALUMINIUM		SG IRON	
	Model Code	*List Price*	*Model Code*	*List Price*
.25 NPTF	**FAA**		**FAA/S**	
.375 NPTF	**FAB**		**FAB/S**	
SAE-4	**FAH**		**FAH/S**	
SAE-6	**FAI**		**FAI/S**	
SAE-8	**FAJ**		**FAJ/S**	
.25 BSPP	**FAT**		**FAT/S**	
.375 BSPP	**FAU**		**FAU/S**	

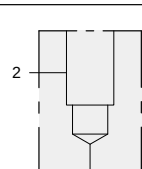

90 degree body.

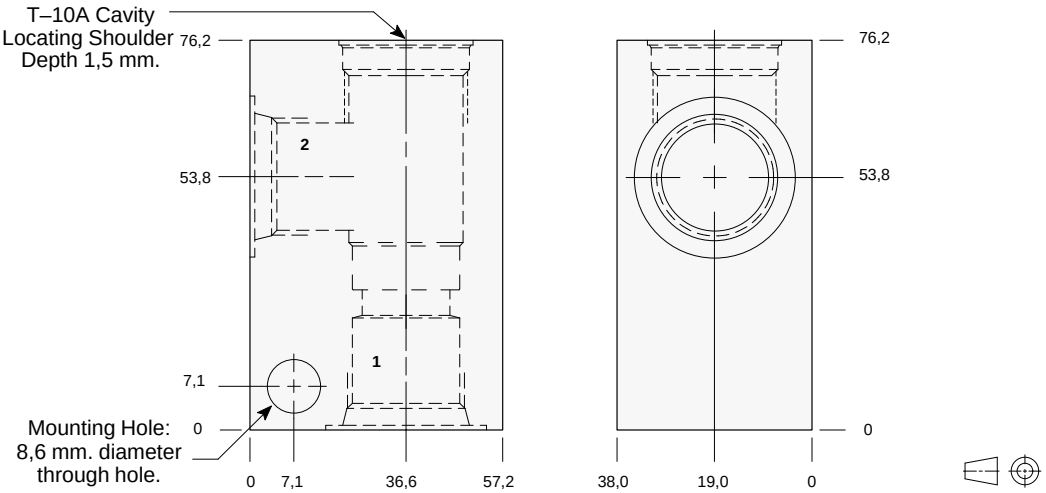

TYPICAL CARTRIDGES USED WITH THIS BODY

RPEC - *** Page 1.06
RPEE - *** Page 1.08
RDDA - *** Page 1.10
RQEB - *** Page 1.12

Instructions for ordering complete cartridge and body assemblies. Page viii

Pressure ratings, material specifications. Page 11.02

Ports 1 & 2	ALUMINIUM		SG IRON	
	Model Code	*List Price*	*Model Code*	*List Price*
.50 NPTF	**FAC**		**FAC/S**	
.75 NPTF	**FAD**		**FAD/S**	
SAE-10	**FAK**		**FAK/S**	
SAE-12	**FAL**		**FAL/S**	
.50 BSPP	**FAV**		**FAV/S**	
.75 BSPP	**FAW**		**FAW/S**	

LINE MOUNT BODIES

- Aluminium rated to 210 bar and SG Iron rated to 350 bar.

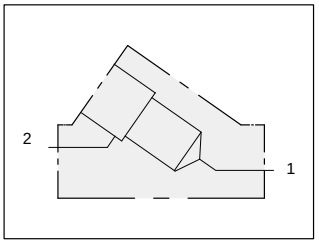

Inline body.

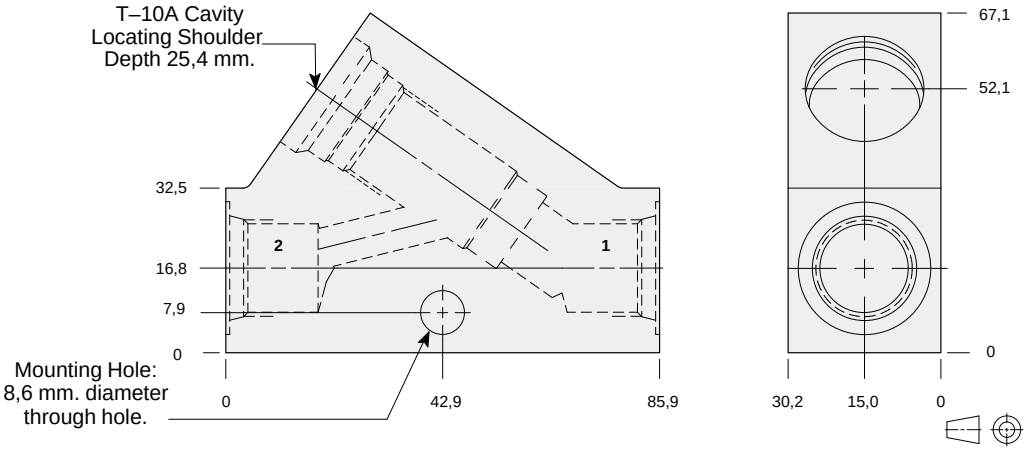

TYPICAL CARTRIDGES USED WITH THIS BODY

RPEC - *** Page 1.06
RPEE - *** Page 1.08
RDDA - *** Page 1.10
RQEB - *** Page 1.12
RBAC - *** Page 1.16

Instructions for ordering complete cartridge and body assemblies. Page viii

Pressure ratings, material specifications. Page 11.02

Ports 1 & 2	ALUMINIUM		SG IRON	
	Model Code	*List Price*	*Model Code*	*List Price*
.25 NPTF	**FCA**		**FCA/S**	
.375 NPTF	**FCB**		**FCB/S**	
.50 NPTF	**FCC**		**FCC/S**	
SAE-4	**FCH**		**FCH/S**	
SAE-6	**FCI**		**FCI/S**	
SAE-8	**FCJ**		**FCJ/S**	
.25 BSPP	**FCT**		**FCT/S**	
.375 BSPP	**FCU**		**FCU/S**	
.50 BSPP	**FCV**		**FCV/S**	

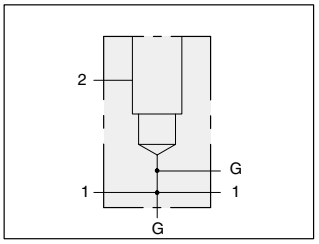

Throughport body with gauge port.

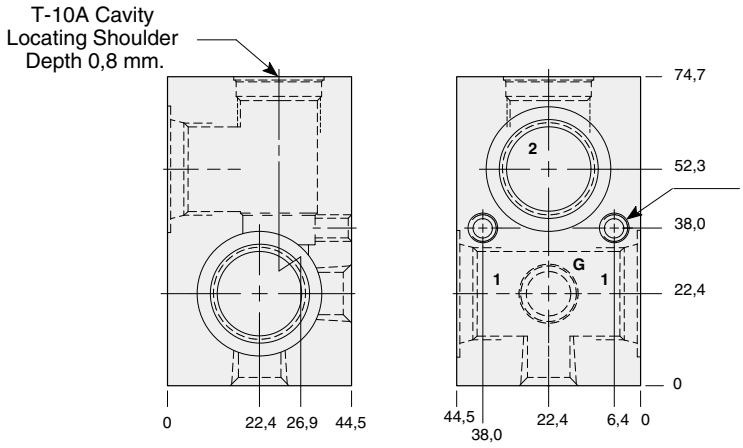

Mounting Holes:
(opposite side)
Inch:.250-20 UNC-2B
x 12,7 mm. deep.
Metric: M6 x 1.00-6H
x 12,7 mm. deep.
2 places.

TYPICAL CARTRIDGES USED WITH THIS BODY

RPEC - *** Page 1.06
RPEE - *** Page 1.08
RDDA - *** Page 1.10
RQEB - *** Page 1.12
RBAC - *** Page 1.16

Instructions for ordering complete cartridge and body assemblies. Page viii

Pressure ratings, material specifications. Page 11.02

Mounting Hole Dimensions	*Ports 1 & 2*	*Gauge Port*	ALUMINIUM		SG IRON	
			Model Code	*List Price*	*Model Code*	*List Price*
Inch	.25 NPTF	.25 NPTF	**FEA**		**FEA/S**	
Inch	.375 NPTF	.25 NPTF	**FEB**		**FEB/S**	
Inch	.50 NPTF	.25 NPTF	**FEC**		**FEC/S**	
Inch	SAE-6	.25 NPTF	**FEI**		**FEI/S**	
Inch	SAE-8	.25 NPTF	**FEJ**		**FEJ/S**	
Inch	SAE-10	.25 NPTF	**FEK**		**FEK/S**	
Metric	.25 BSPP	.25 BSPP	**FET**		**FET/S**	
Metric	.375 BSPP	.25 BSPP	**FEU**		**FEU/S**	
Metric	.50 BSPP	.25 BSPP	**FEV**		**FEV/S**	

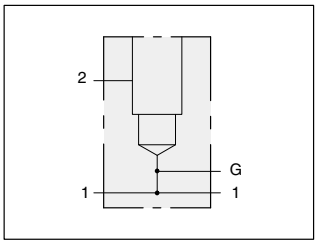

Throughport body with gauge port.

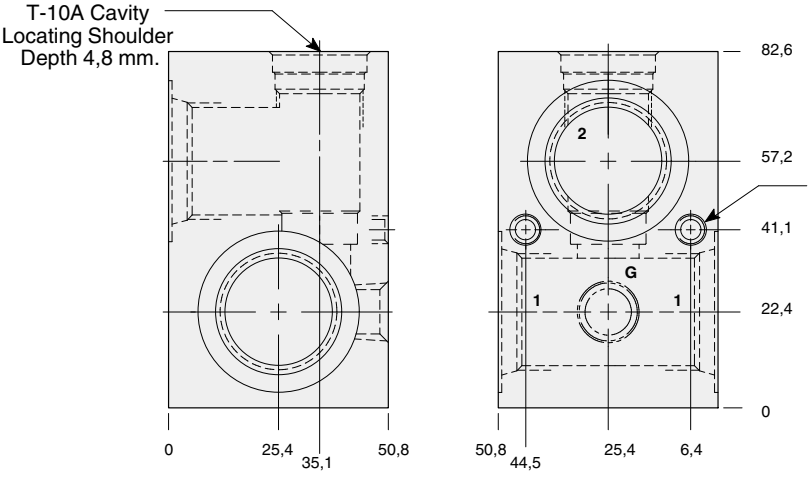

Mounting Holes:
(opposite side)
Inch:.250-20 UNC-2B
x 12,7 mm. deep.
Metric: M6 x 1.00-6H
x 12,7 mm. deep.
2 places.

TYPICAL CARTRIDGES USED WITH THIS BODY

RPEC - *** Page 1.06
RPEE - *** Page 1.08
RDDA - *** Page 1.10
RQEB - *** Page 1.12

Instructions for ordering complete cartridge and body assemblies. Page viii

Pressure ratings, material specifications. Page 11.02

Mounting Hole Dimensions	*Ports 1 & 2*	*Gauge Port*	ALUMINIUM		SG IRON	
			Model Code	*List Price*	*Model Code*	*List Price*
Inch	.75 NPTF	.25 NPTF	**FED**		**FED/S**	
Inch	SAE-12	.25 NPTF	**FEL**		**FEL/S**	
Metric	.75 BSPP	.25 BSPP	**FEW**		**FEW/S**	

LINE MOUNT BODIES

- Aluminium rated to 210 bar and SG Iron rated to 350 bar.

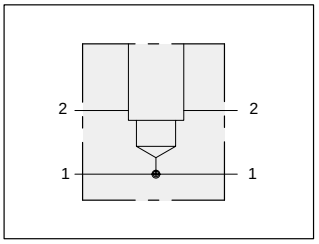

Dual through port body.

T–10A Cavity Locating Shoulder Depth 1,5 mm.

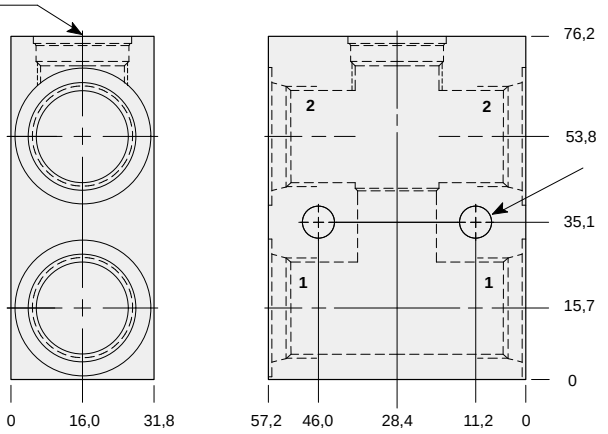

Mounting Holes: 8,6 mm. diameter through hole 2 places.

TYPICAL CARTRIDGES USED WITH THIS BODY

RPEC - *** Page 1.06
RPEE - *** Page 1.08
RDDA - *** Page 1.10
RQEB - *** Page 1.12
RBAC - *** Page 1.16

Instructions for ordering complete cartridge and body assemblies. Page viii

Pressure ratings, material specifications. Page 11.02

Ports 1 & 2	ALUMINIUM		SG IRON	
	Model Code	*List Price*	*Model Code*	*List Price*
.25 NPTF	**WNR**		**WNR/S**	
.375 NPTF	**WNS**		**WNS/S**	
.50 NPTF	**WNT**		**WNT/S**	
SAE-6	**WNU**		**WNU/S**	
SAE-8	**WNV**		**WNV/S**	
SAE-10	**WNW**		**WNW/S**	
.25 BSPP	**WNX**		**WNX/S**	
.375 BSPP	**WNY**		**WNY/S**	
.50 BSPP	**WNZ**		**WNZ/S**	

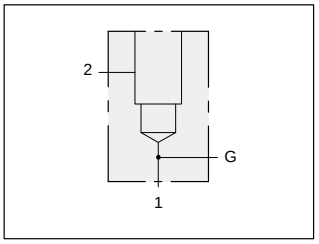

90 degree .75” SAE Code 61 flange port body with gauge port.

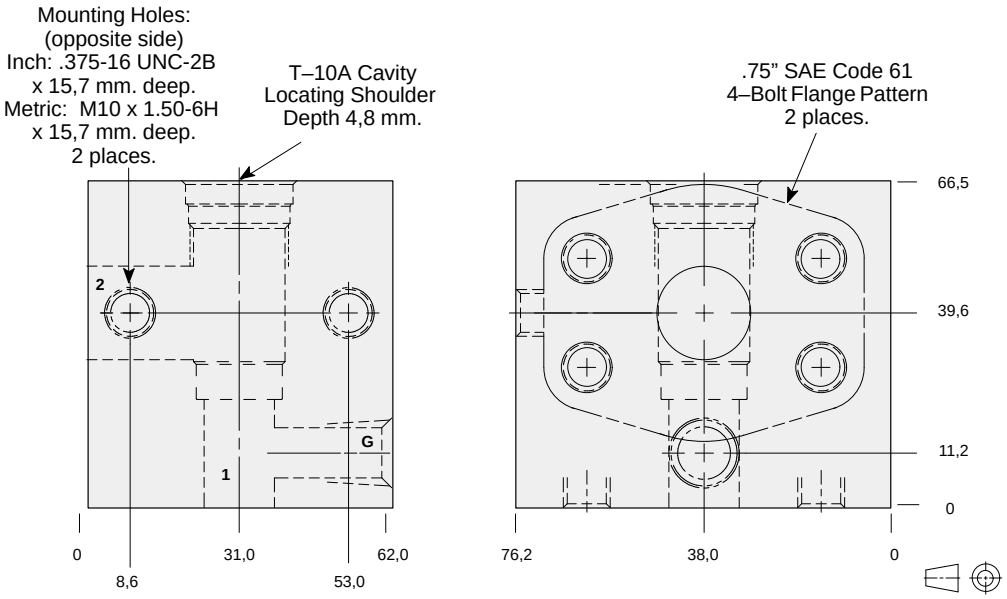

TYPICAL CARTRIDGES USED WITH THIS BODY

RPEC - *** Page 1.06
RPEE - *** Page 1.08
RDDA - *** Page 1.10
RQEB - *** Page 1.12

Instructions for ordering complete cartridge and body assemblies. Page viii
Pressure ratings, material specifications. Page 11.02
SAE Specifications. Page 11.03

Mounting Hole Dimensions	*Gauge Port*	ALUMINIUM		SG IRON	
		Model Code	*List Price*	*Model Code*	*List Price*
Inch	.25 NPTF	**FAO**		**FAO/S**	
Metric	.25 BSPP	**FAO/M**		**FAO/T**	

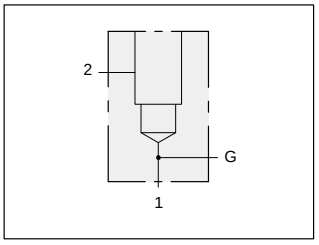

90 degree .75” SAE Code 62 flange port body with gauge port.

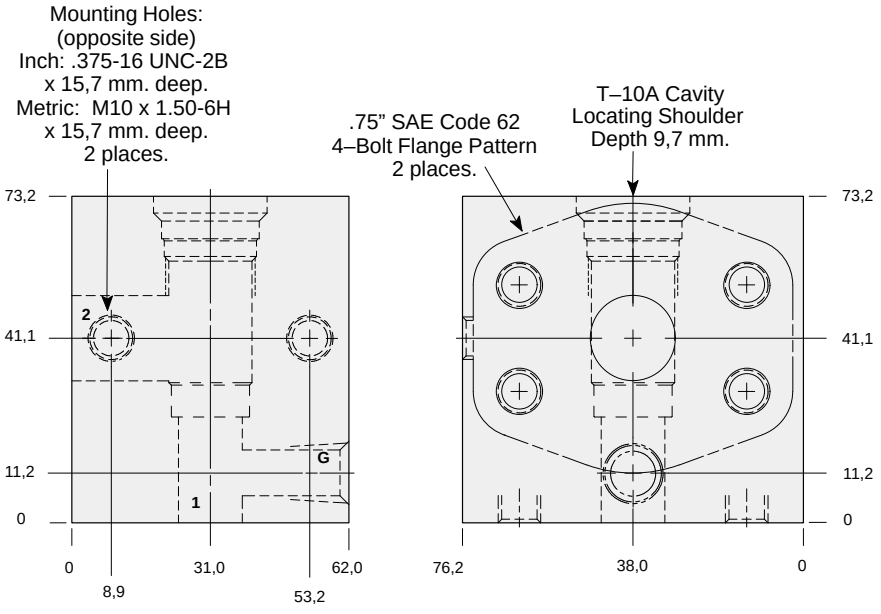

TYPICAL CARTRIDGES USED WITH THIS BODY

RPEC - *** Page 1.06
RPEE - *** Page 1.08
RDDA - *** Page 1.10
RQEB - *** Page 1.12

Instructions for ordering complete cartridge and body assemblies. Page viii
Pressure ratings, material specifications. Page 11.02
SAE Specifications. Page 11.03

Mounting Hole Dimensions	*Gauge Port*	ALUMINIUM		SG IRON	
		Model Code	*List Price*	*Model Code*	*List Price*
Inch	.25 NPTF	**FA3**		**FA3/S**	
Metric	.25 BSPP	**FA3/M**		**FA3/T**	

LINE MOUNT BODIES

- Aluminium rated to 210 bar and SG Iron rated to 350 bar.

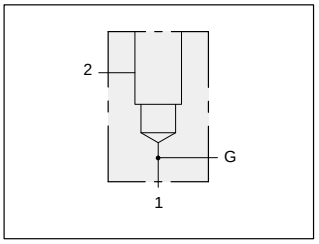

TYPICAL CARTRIDGES USED WITH THIS BODY

RPEC - *** Page 1.06
RPEE - *** Page 1.08
RDDA - *** Page 1.10
RQEB - *** Page 1.12

Instructions for ordering complete cartridge and body assemblies. Page viii

Pressure ratings, material specifications. Page 11.02

SAE Specifications. Page 11.03

90 degree 1.00” SAE Code 61 flange port body with gauge port.

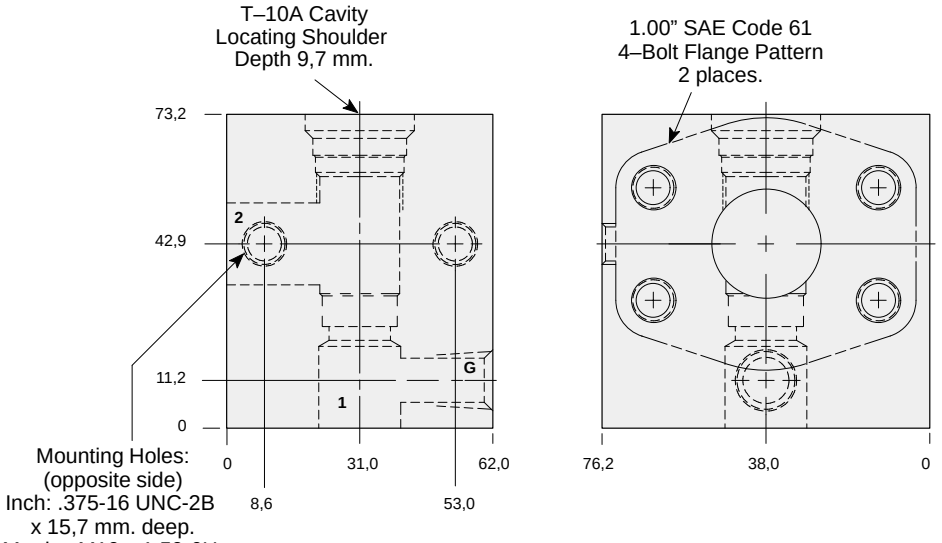

Mounting Hole Dimensions	*Gauge Port*	ALUMINIUM		SG IRON	
		Model Code	*List Price*	*Model Code*	*List Price*
Inch	.25 NPTF	**FAP**		**FAP/S**	
Inch	.25 BSPP	**FAP/M**		**FAP/T**	

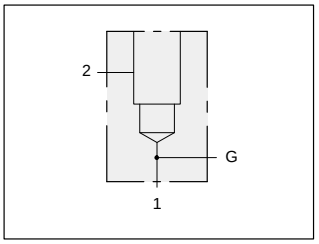

TYPICAL CARTRIDGES USED WITH THIS BODY

RPEC - *** Page 1.06
RPEE - *** Page 1.08
RDDA - *** Page 1.10
RQEB - *** Page 1.12

Instructions for ordering complete cartridge and body assemblies. Page viii

Pressure ratings, material specifications. Page 11.02

SAE Specifications. Page 11.03

90 degree 1.00” SAE Code 62 flange port body with gauge port.

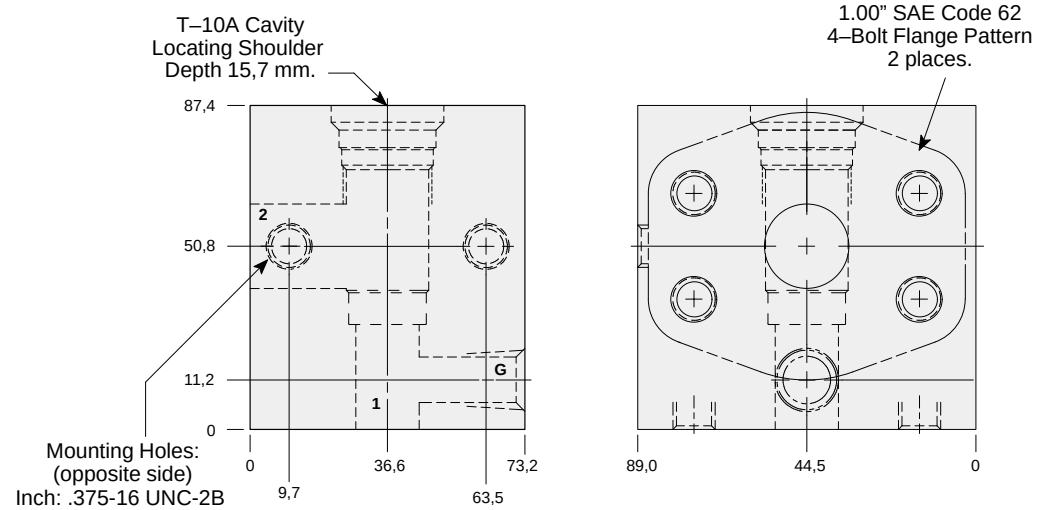

Mounting Hole Dimensions	*Gauge Port*	ALUMINIUM		SG IRON	
		Model Code	*List Price*	*Model Code*	*List Price*
Inch	.25 NPTF	**FA4**		**FA4/S**	
Metric	.25 BSPP	**FA4/M**		**FA4/T**	

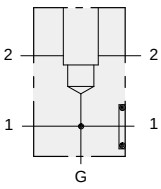

Sandwich mount through port .75” SAE Code 61 body with gauge port.

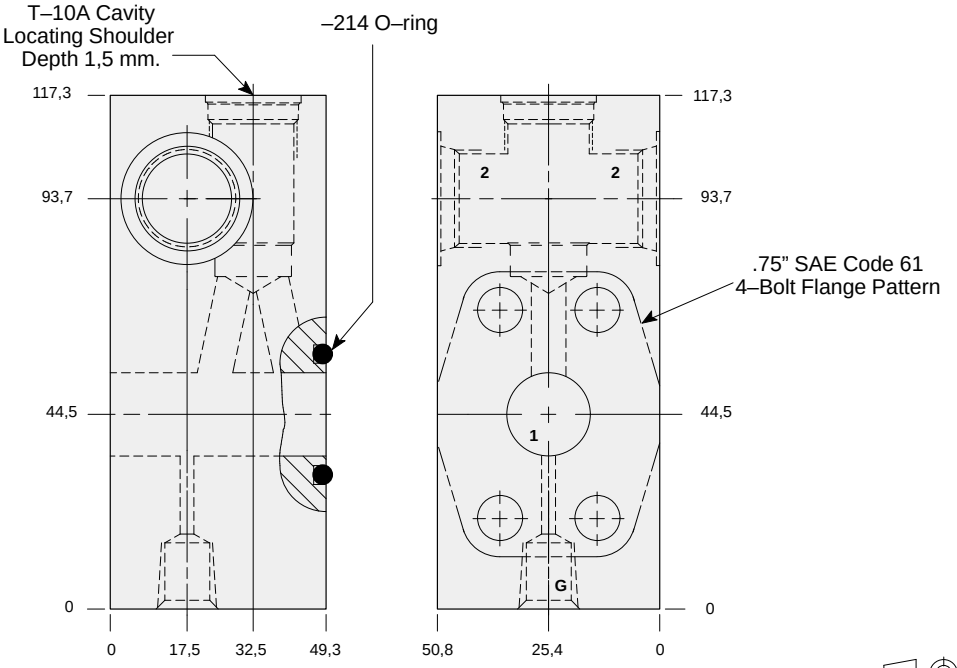

TYPICAL CARTRIDGES USED WITH THIS BODY

RPEC - ***	Page	1.06
RPEE - ***	Page	1.08
RDDA - ***	Page	1.10
RQEB - ***	Page	1.12

Cartridge seal type determines O–ring type.

Instructions for ordering complete cartridge and body assemblies. Page iii

Pressure ratings, material specifications. Page 11.02

SAE Specifications. Page 11.03

Mounting Hole Dimensions	*Port 2*	*Gauge Port*	ALUMINIUM		SG IRON	
			Model Code	*List Price*	*Model Code*	*List Price*
Inch	SAE-10	.25 NPTF	**ZQN**		**ZQN/S**	
Metric	.50 BSPP	.25 BSPP	**ZQM**		**ZQM/S**	

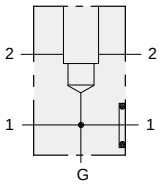

Flange mount through port .75” SAE Code 61 body with threaded outlet and gauge port.

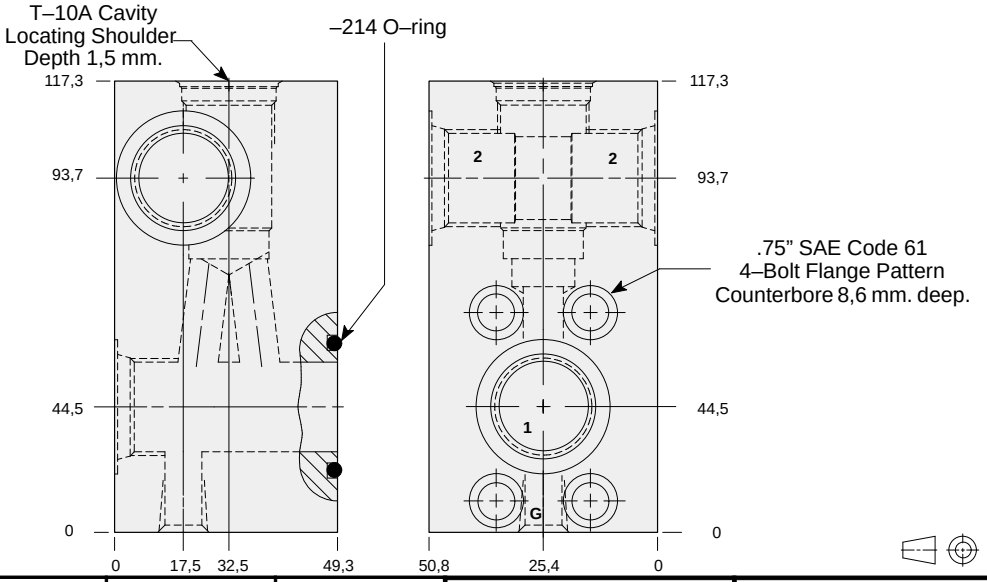

TYPICAL CARTRIDGES USED WITH THIS BODY

RPEC - ***	Page	1.06
RPEE - ***	Page	1.08
RDDA - ***	Page	1.10
RQEB - ***	Page	1.12

Cartridge seal type determines O–ring type.

Instructions for ordering complete cartridge and body assemblies. Page iii

Pressure ratings, material specifications. Page 11.02

SAE Specifications. Page 11.03

Mounting Hole Dimensions	*Ports 1 & 2*	*Gauge Port*	ALUMINIUM		SG IRON	
			Model Code	*List Price*	*Model Code*	*List Price*
Inch	SAE-10	.25 NPTF	**ZDG**		**ZDG/S**	
Inch	.50 NPTF	.25 NPTF	**ZDJ**		**ZDJ/S**	
Metric	.50 BSPP	.25 BSPP	**ZDD**		**ZDD/S**	

LINE MOUNT BODIES

- Aluminium rated to 210 bar and SG Iron rated to 350 bar.

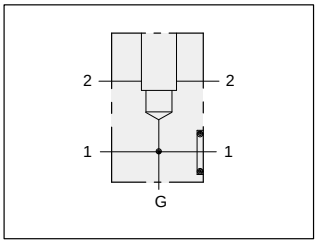

TYPICAL CARTRIDGES USED WITH THIS BODY

RPEC - *** Page 1.06
RPEE - *** Page 1.08
RDDA - *** Page 1.10
RQEB - *** Page 1.12

Cartridge seal type determines O–ring type.

Instructions for ordering complete cartridge and body assemblies. Page iii

Pressure ratings, material specifications. Page 11.02

SAE Specifications. Page 11.03

Sandwich mount through port .75” SAE Code 61 body with gauge port.

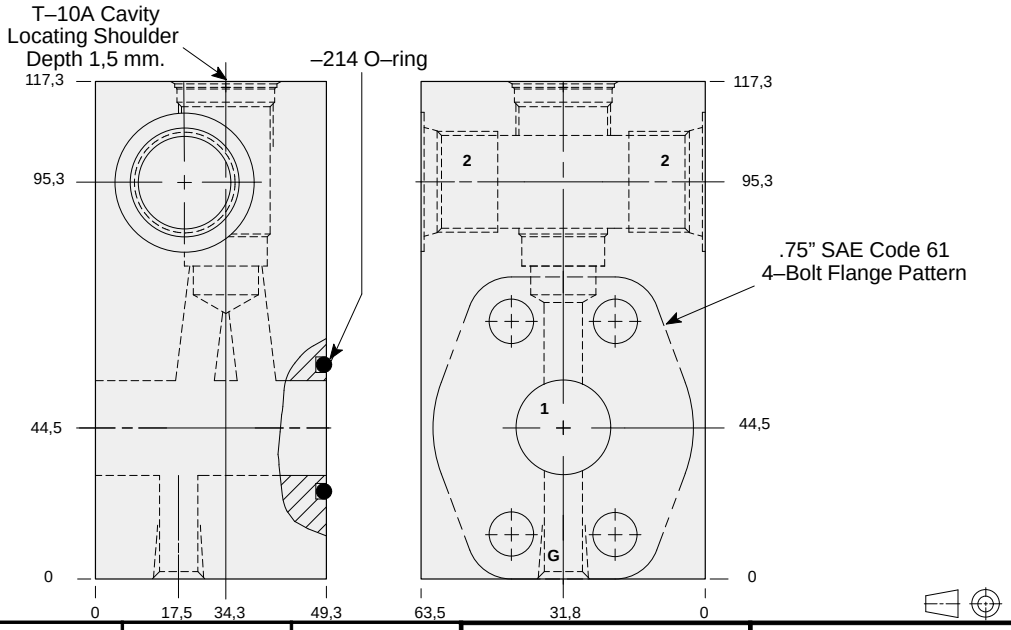

Mounting Hole Dimensions	*Port 2*	*Gauge Port*	ALUMINIUM		SG IRON	
			Model Code	*List Price*	*Model Code*	*List Price*
Inch	SAE-12	.25 NPTF	**ZHB**		**ZHB/S**	
Inch	.75 NPTF	.25 NPTF	**ZHC**		**ZHC/S**	
Metric	.75 BSPP	.25 BSPP	**ZGZ**		**ZGZ/S**	

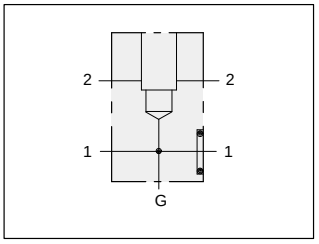

TYPICAL CARTRIDGES USED WITH THIS BODY

RPEC - *** Page 1.06
RPEE - *** Page 1.08
RDDA - *** Page 1.10
RQEB - *** Page 1.12

Cartridge seal type determines O–ring type.

Instructions for ordering complete cartridge and body assemblies. Page iii

Pressure ratings, material specifications. Page 11.02

SAE Specifications. Page 11.03

Sandwich mount through port .75” SAE Code 62 body with gauge port.

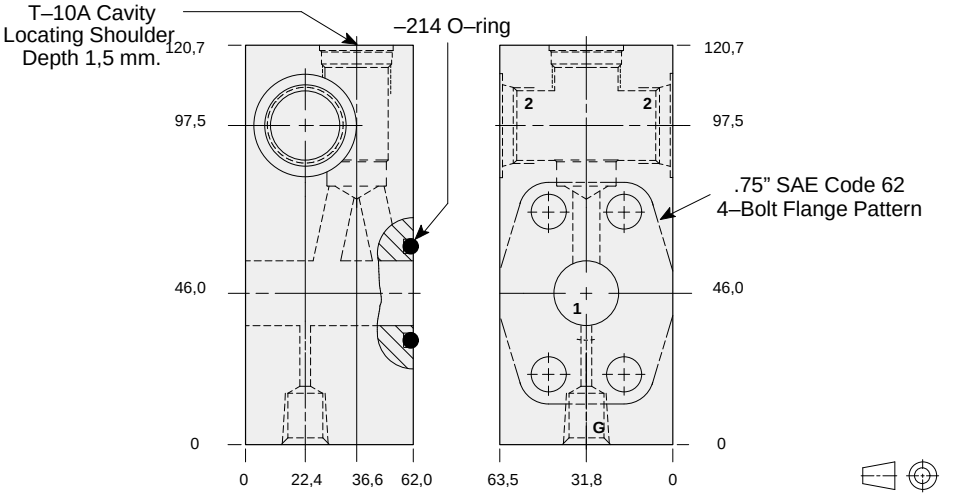

Mounting Hole Dimensions	*Port 2*	*Gauge Port*	ALUMINIUM		SG IRON	
			Model Code	*List Price*	*Model Code*	*List Price*
Inch	SAE-12	.25 NPTF	**ZCW**		**ZCW/S**	
Inch	SAE-10	.25 NPTF	**ZCX**		**ZCX/S**	
Inch	.75 NPTF	.25 NPTF	**ZCY**		**ZCY/S**	
Inch	.50 NPTF	.25 NPTF	**ZCZ**		**ZCZ/S**	
Metric	.75 BSPP	.25 BSPP	**ZCT**		**ZCT/S**	
Metric	.50 BSPP	.25 BSPP	**ZCV/M**		**ZCV/T**	

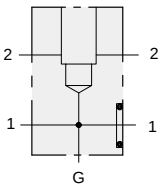

Flange mount through port .75" SAE Code 61 body with threaded outlet and gauge port.

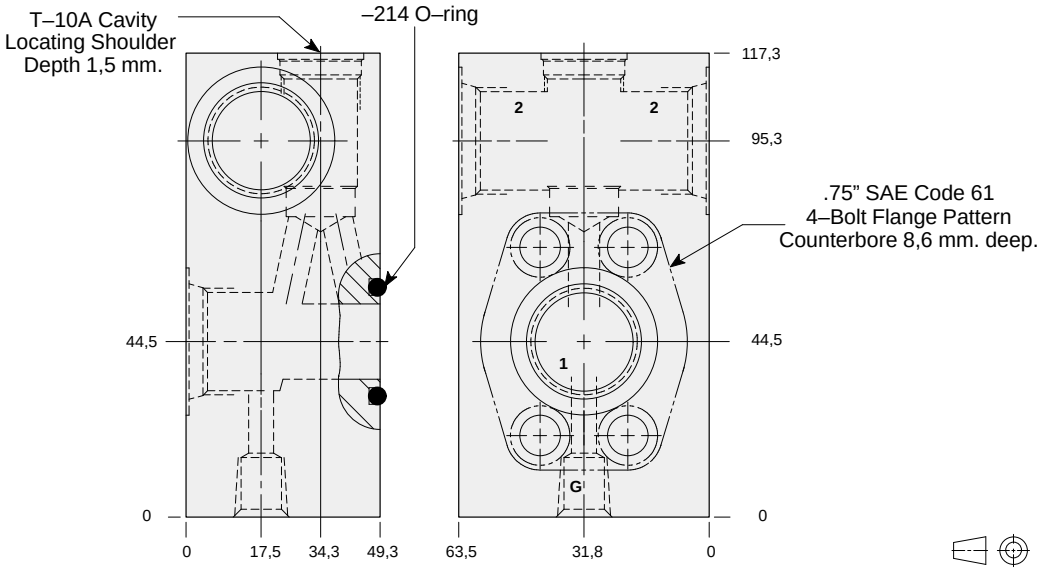

TYPICAL CARTRIDGES USED WITH THIS BODY

RPEC - ***	Page	1.06
RPEE - ***	Page	1.08
RDDA - ***	Page	1.10
RQEB - ***	Page	1.12

Cartridge seal type determines O–ring type.

Instructions for ordering complete cartridge and body assemblies.	Page	iii
Pressure ratings, material specifications.	Page	11.02
SAE Specifications.	Page	11.03

Mounting Hole Dimensions	*Ports 1 & 2*	*Gauge Port*	ALUMINIUM		SG IRON	
			Model Code	*List Price*	*Model Code*	*List Price*
Inch	SAE-12	.25 NPTF	**ZDF**		**ZDF/S**	
Inch	.75 NPTF	.25 NPTF	**ZDH**		**ZDH/S**	
Metric	.75 BSPP	.25 BSPP	**ZDC**		**ZDC/S**	

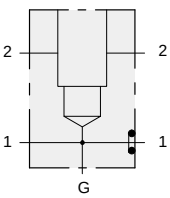

Flange mount through port .75" SAE Code 62 body with threaded outlet and gauge port.

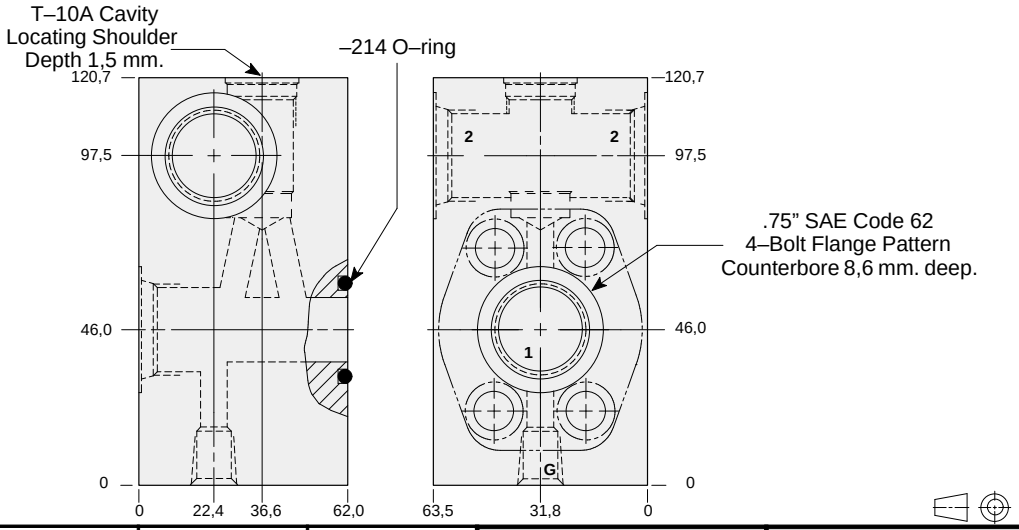

TYPICAL CARTRIDGES USED WITH THIS BODY

RPEC - ***	Page	1.06
RPEE - ***	Page	1.08
RDDA - ***	Page	1.10
RQEB - ***	Page	1.12

Cartridge seal type determines O–ring type.

Instructions for ordering complete cartridge and body assemblies.	Page	iii
Pressure ratings, material specifications.	Page	11.02
SAE Specifications.	Page	11.03

Mounting Hole Dimensions	*Ports 1 & 2*	*Gauge Port*	ALUMINIUM		SG IRON	
			Model Code	*List Price*	*Model Code*	*List Price*
Inch	SAE-12	.25 NPTF	**ZCP**		**ZCP/S**	
Inch	SAE-10	.25 NPTF	**ZCQ**		**ZCQ/S**	
Inch	.75 NPTF	.25 NPTF	**ZCR**		**ZCR/S**	
Inch	.50 NPTF	.25 NPTF	**ZCS**		**ZCS/S**	
Metric	.75 BSPP	.25 BSPP	**ZCM**		**ZCM/S**	
Metric	.50 BSPP	.25 BSPP	**ZCN**		**ZCN/S**	

LINE MOUNT BODIES

- Aluminium rated to 210 bar and SG Iron rated to 350 bar.

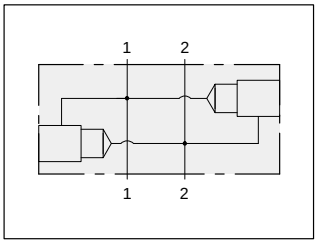

TYPICAL CARTRIDGES USED WITH THIS BODY

RPEC - *** Page 1.06
RPEE - *** Page 1.08
RDDA - *** Page 1.10
RQEB - *** Page 1.12

Instructions for ordering complete cartridge and body assemblies. Page viii

Pressure ratings, material specifications. Page 11.02

Two cavity body for cross–port relief applications.

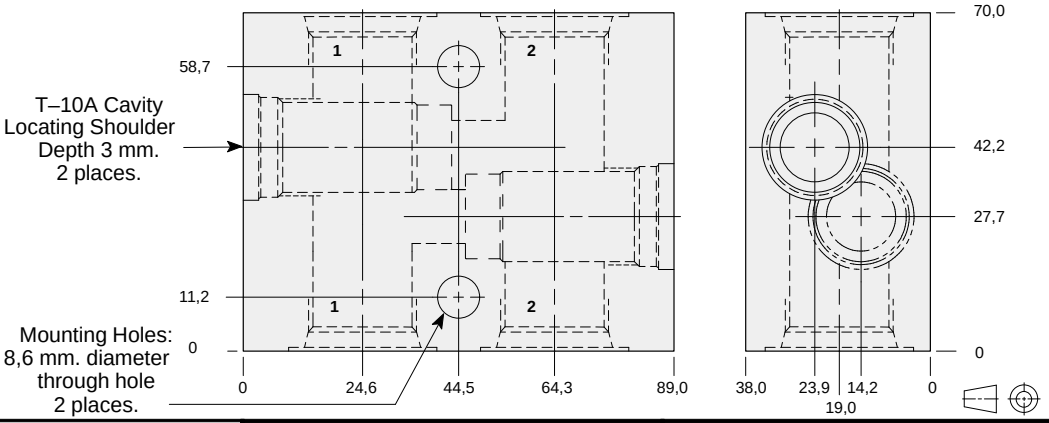

Ports 1 & 2	ALUMINIUM		SG IRON	
	Model Code	List Price	Model Code	List Price
.25 NPTF	**YFA**		**YFA/S**	
.375 NPTF	**YFB**		**YFB/S**	
.50 NPTF	**YFC**		**YFC/S**	
SAE-4	**YFH**		**YFH/S**	
SAE-6	**YFI**		**YFI/S**	
SAE-8	**YFJ**		**YFJ/S**	
SAE-10	**YFK**		**YFK/S**	
.25 BSPP	**YFT**		**YFT/S**	
.375 BSPP	**YFU**		**YFU/S**	
.50 BSPP	**YFV**		**YFV/S**	

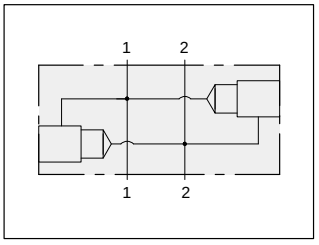

TYPICAL CARTRIDGES USED WITH THIS BODY

RPEC - *** Page 1.06
RPEE - *** Page 1.08
RDDA - *** Page 1.10
RQEB - *** Page 1.12

Instructions for ordering complete cartridge and body assemblies. Page viii

Pressure ratings, material specifications. Page 11.02

Two cavity body for cross–port relief applications.

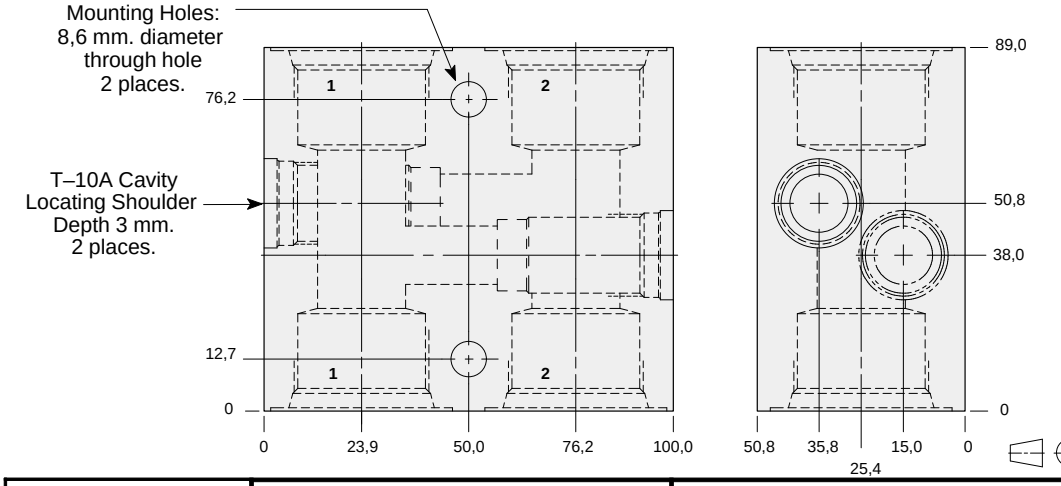

Ports 1 & 2	ALUMINIUM		SG IRON	
	Model Code	List Price	Model Code	List Price
.75 NPTF	**YFD**		**YFD/S**	
1.00 NPTF	**YFE**		**YFE/S**	
SAE-12	**YFL**		**YFL/S**	
SAE-16	**YFM**		**YFM/S**	
.75 BSPP	**YFW**		**YFW/S**	
1.00 BSPP	**YFX**		**YFX/S**	

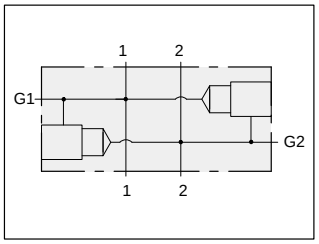

TYPICAL CARTRIDGES USED WITH THIS BODY

RPEC - *** Page 1.06
RPEE - *** Page 1.08
RDDA - *** Page 1.10
RQEB - *** Page 1.12

Instructions for ordering complete cartridge and body assemblies. Page viii

Pressure ratings, material specifications. Page 11.02

SAE Specifications. Page 11.03

Two cavity .75" SAE Code 61 flange port body for cross–port relief applications.

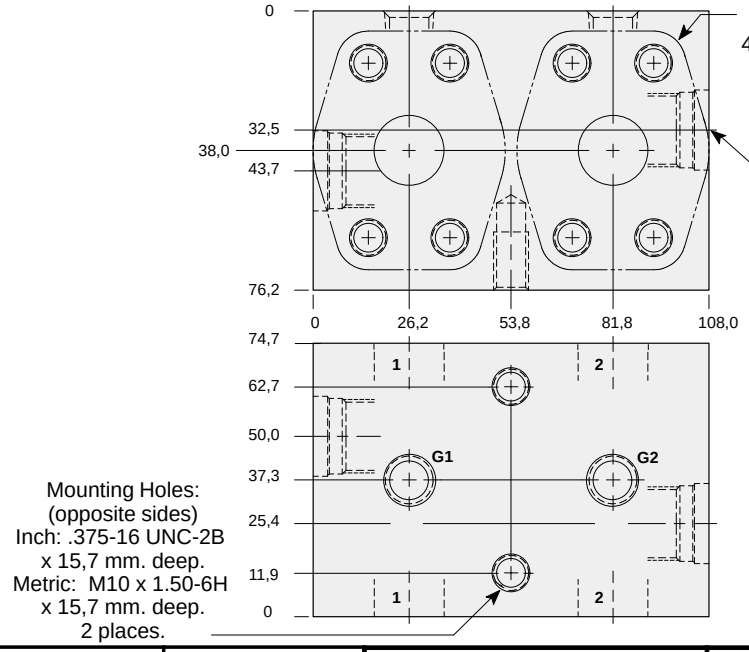

Mounting Hole Dimensions	*Ports G1 & G2*	ALUMINIUM		SG IRON	
		Model Code	*List Price*	*Model Code*	*List Price*
Inch	.25 NPTF	**YFO**		**YFO/S**	
Metric	.25 BSPP	**YFO/M**		**YFO/T**	

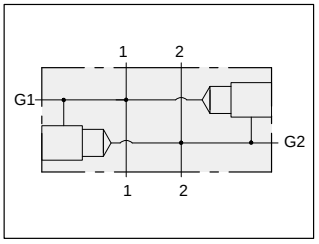

TYPICAL CARTRIDGES USED WITH THIS BODY

RPEC - *** Page 1.06
RPEE - *** Page 1.08
RDDA - *** Page 1.10
RQEB - *** Page 1.12

Instructions for ordering complete cartridge and body assemblies. Page viii

Pressure ratings, material specifications. Page 11.02

SAE Specifications. Page 11.03

Two cavity .75" SAE Code 62 flange port body for cross–port relief applications.

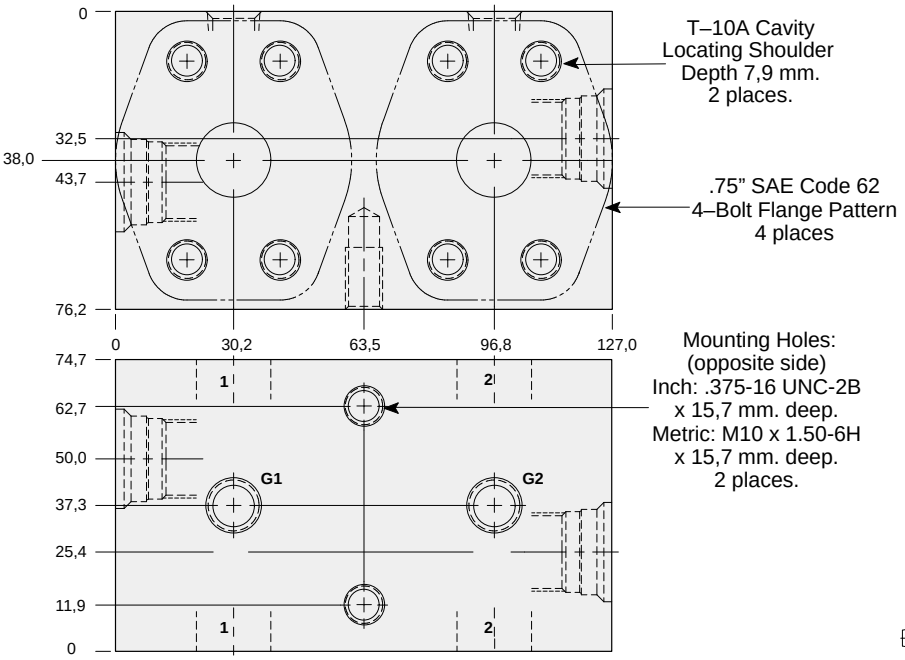

Mounting Hole Dimensions	*Ports G1 & G2*	ALUMINIUM		SG IRON	
		Model Code	*List Price*	*Model Code*	*List Price*
Inch	.25 NPTF	**YF3**		**YF3/S**	
Metric	.25 BSPP	**YF3/M**		**YF3/T**	

LINE MOUNT BODIES

- Aluminium rated to 210 bar and SG Iron rated to 350 bar.

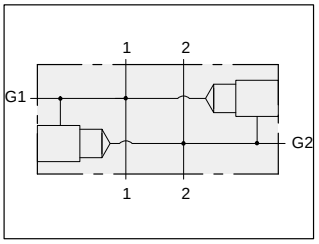

TYPICAL CARTRIDGES USED WITH THIS BODY

RPEC - *** Page 1.06
RPEE - *** Page 1.08
RDDA - *** Page 1.10
RQEB - *** Page 1.12

Instructions for ordering complete cartridge and body assemblies. Page viii

Pressure ratings, material specifications. Page 11.02

SAE Specifications. Page 11.03

Two cavity 1.00” SAE Code 61 flange port body with gauge ports for cross–port relief applications.

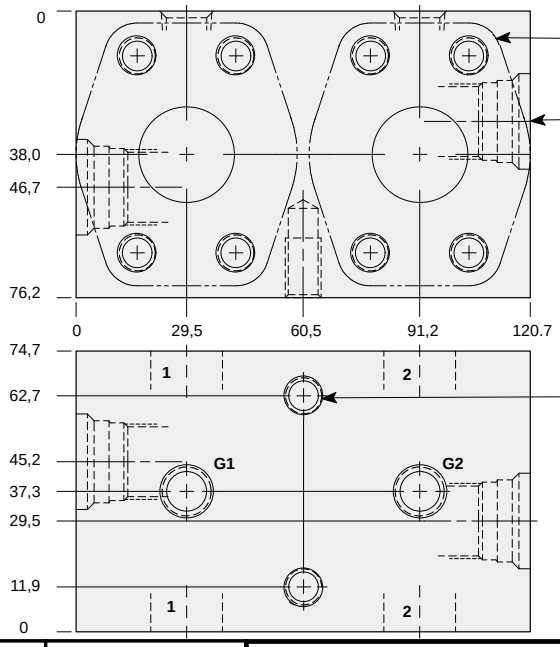

1.00” SAE Code 61
4–Bolt Flange Pattern
4 places.

T–10A Cavity
Locating Shoulder
Depth 14,2 mm.
2 places.

Mounting Holes:
(opposite sides)
Inch: .375-16 UNC-2B
x 15,7 mm. deep.
Metric: M10 x 1.50-6H
x 15,7 mm. deep.
2 places.

Mounting Hole Dimensions	*Ports G1 & G2*	ALUMINIUM		SG IRON	
		Model Code	*List Price*	*Model Code*	*List Price*
Inch	.25 NPTF	**YFP**		**YFP/S**	
Metric	.25 BSPP	**YFP/M**		**YFP/T**	

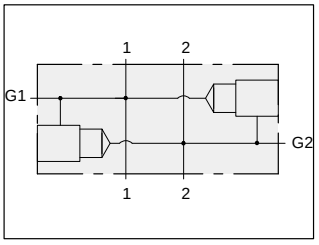

TYPICAL CARTRIDGES USED WITH THIS BODY

RPEC - *** Page 1.06
RPEE - *** Page 1.08
RDDA - *** Page 1.10
RQEB - *** Page 1.12

Instructions for ordering complete cartridge and body assemblies. Page viii

Pressure ratings, material specifications. Page 11.02

SAE Specifications. Page 11.03

Two cavity 1.00” SAE Code 62 flange port body with gauge ports for cross–port relief applications.

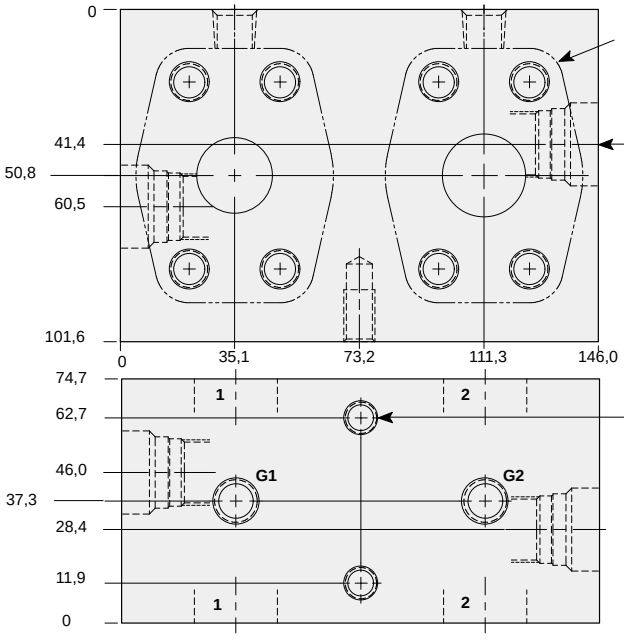

1.00” SAE Code 62
4–Bolt Flange Pattern
4 places.

T–10A Cavity
Locating Shoulder
Depth 14,2 mm.
2 places.

Mounting Holes:
(opposite sides)
Inch: .375-16 UNC-2B
x 15,7 mm. deep.
Metric: M10 x 1.50-6H
x 15,7 mm. deep.
2 places.

Mounting Hole Dimensions	*Ports G1 & G2*	ALUMINIUM		SG IRON	
		Model Code	*List Price*	*Model Code*	*List Price*
Inch	.25 NPTF	**YF4**		**YF4/S**	
Metric	.25 BSPP	**YF4/M**		**YF4/T**	

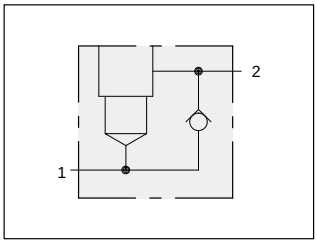

Body with reverse free flow check.

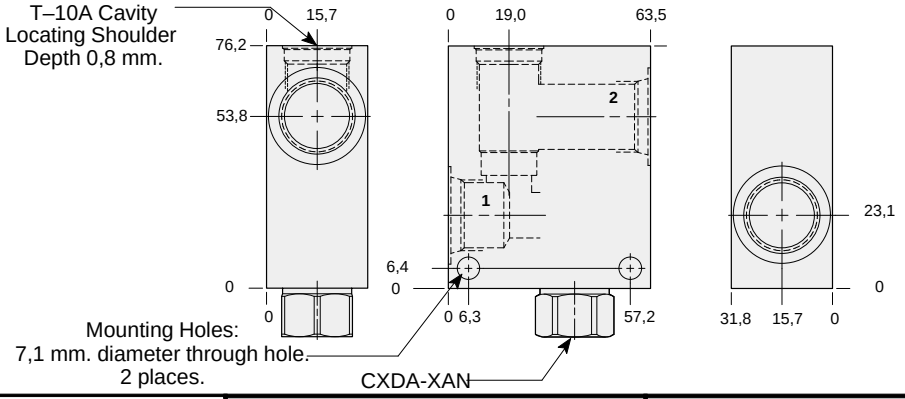

TYPICAL CARTRIDGES USED WITH THIS BODY

RPEC - *** Page 1.06
RPEE - *** Page 1.08
RDDA - *** Page 1.10
RQEB - *** Page 1.12
RBAC - *** Page 1.16

Cartridge seal type determines check valve seal type.

Instructions for ordering complete cartridge and body assemblies. Page viii

Pressure ratings, material specifications. Page 11.02

Ports 1 & 2	ALUMINIUM		SG IRON	
	Model Code	*List Price*	*Model Code*	*List Price*
.25 NPTF	**FNA**		**FNA/S**	
.375 NPTF	**FNB**		**FNB/S**	
.50 NPTF	**FNC**		**FNC/S**	
SAE-6	**FNI**		**FNI/S**	
SAE-8	**FNJ**		**FNJ/S**	
SAE-10	**FNK**		**FNK/S**	
.25 BSPP	**FNT**		**FNT/S**	
.375 BSPP	**FNU**		**FNU/S**	
.50 BSPP	**FNV**		**FNV/S**	

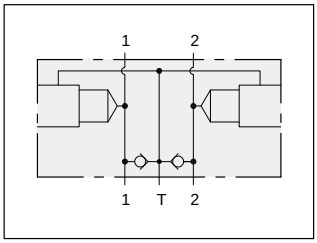

Two cavity body with make–up checks for cross–port relief applications.

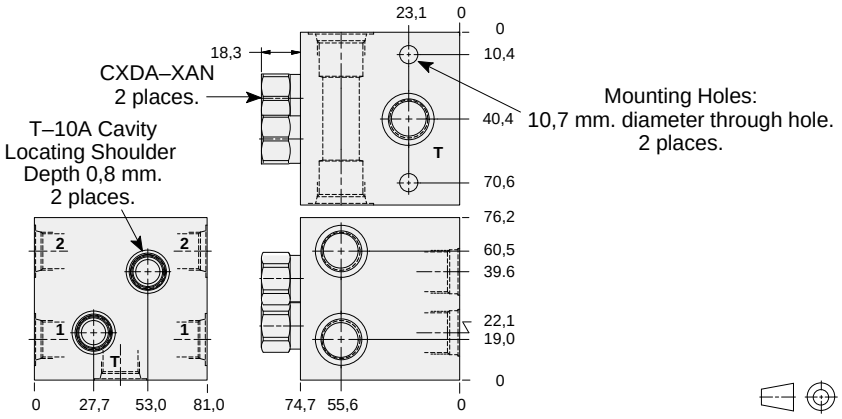

TYPICAL CARTRIDGES USED WITH THIS BODY

RPEC - *** Page 1.06
RPEE - *** Page 1.08
RDDA - *** Page 1.10
RQEB - *** Page 1.12

Cartridge seal type determines check valve seal type.

Instructions for ordering complete cartridge and body assemblies. Page viii

Pressure ratings, material specifications. Page 11.02

Ports 1,2,& T	ALUMINIUM		SG IRON	
	Model Code	*List Price*	*Model Code*	*List Price*
.25 NPTF	**FMA**		**FMA/S**	
.375 NPTF	**FMB**		**FMB/S**	
.50 NPTF	**FMC**		**FMC/S**	
SAE-6	**FMI**		**FMI/S**	
SAE-8	**FMJ**		**FMJ/S**	
SAE-10	**FMK**		**FMK/S**	
.25 BSPP	**FMT**		**FMT/S**	
.375 BSPP	**FMU**		**FMU/S**	
.50 BSPP	**FMV**		**FMV/S**	

LINE MOUNT BODIES

- Aluminium rated to 210 bar and SG Iron rated to 350 bar.

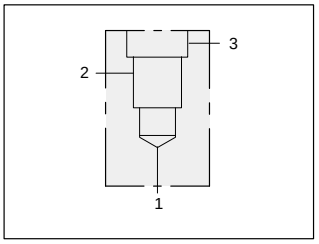

90 degree body.

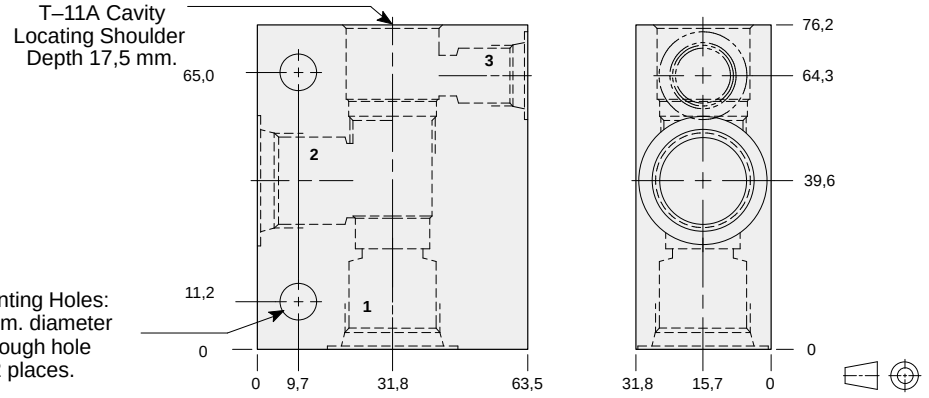

Ports 1 & 2	*Port 3*	ALUMINIUM		SG IRON	
		Model Code	*List Price*	*Model Code*	*List Price*
.25 NPTF	.25 NPTF	**ECA**		**ECA/S**	
.375 NPTF	.25 NPTF	**ECB**		**ECB/S**	
.50 NPTF	.25 NPTF	**ECC**		**ECC/S**	
SAE-4	SAE-4	**ECH**		**ECH/S**	
SAE-6	SAE-6	**ECI**		**ECI/S**	
SAE-8	SAE-6	**ECJ**		**ECJ/S**	
SAE-10	SAE-6	**ECK**		**ECK/S**	
.25 BSPP	.25 BSPP	**ECT**		**ECT/S**	
.375 BSPP	.25 BSPP	**ECU**		**ECU/S**	
.50 BSPP	.25 BSPP	**ECV**		**ECV/S**	

TYPICAL CARTRIDGES USED WITH THIS BODY

RBAD - *** Page 1.17
RVCA - *** Page 1.18
RSDC - *** Page 2.06
SQDB - *** Page 2.08
SCCA - *** Page 2.12
PBDB - *** Page 3.06
CBCA - *** Page 4.10
CBCG - *** Page 4.12
CBCH - *** Page 4.14
CKCB - *** Page 4.16
LODC - *** Page 9.08
LKDC - *** Page 9.10
LPDC - *** Page 9.12
LRDC - *** Page 9.14
CSAB - *** Page 10.08
CDAB - *** Page 10.10
CODA - *** Page 10.12

Instructions for ordering complete cartridge and body assemblies. Page viii

Pressure ratings, material specifications. Page 11.02

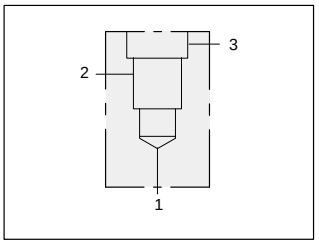

90 degree body with high capacity port 3.

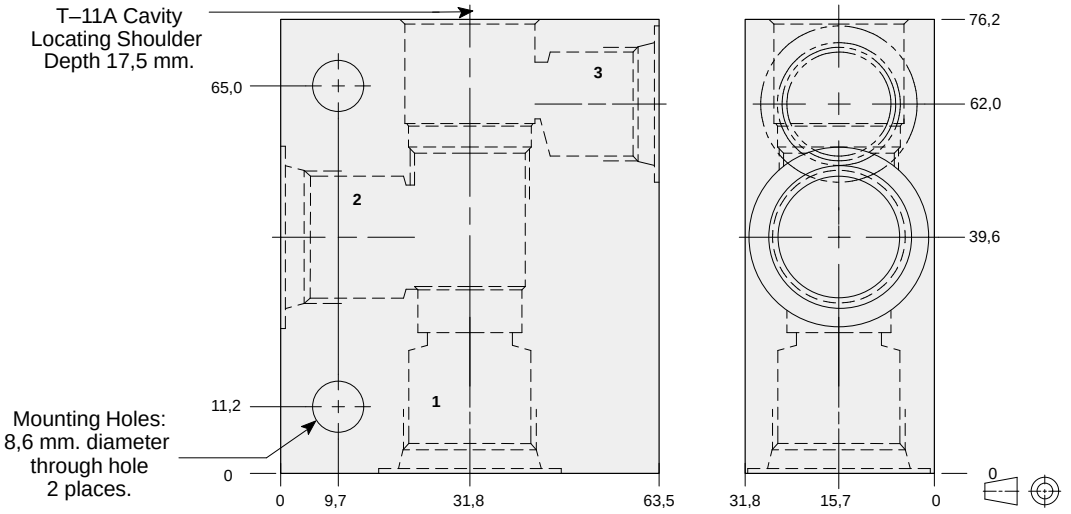

Mounting Hole Dimensions	*Port 3*	ALUMINIUM		SG IRON	
		Model Code	*List Price*	*Model Code*	*List Price*
.375 NPTF	.375 NPTF	**EAB**		**EAB/S**	
.50 NPTF	.375 BSPP	**EAC**		**EAC/S**	
SAE-8	SAE-8	**EAJ**		**EAJ/S**	
SAE-10	SAE-8	**EAK**		**EAK/S**	
.375 BSPP	.375 BSPP	**EAU**		**EAU/S**	
.50 BSPP	.375 BSPP	**EAV**		**EAV/S**	

TYPICAL CARTRIDGES USED WITH THIS BODY

PPDB - *** Page 3.10
FRCA - *** Page 6.02
DPBA - *** Page 8.06
DPBB - *** Page 8.07
DPBC - *** Page 8.08
DPBD - *** Page 8.09

Instructions for ordering complete cartridge and body assemblies. Page viii

Pressure ratings, material specifications. Page 11.02

- Aluminium rated to 210 bar and SG Iron rated to 350 bar.

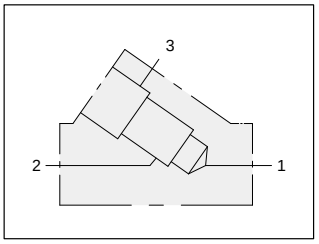

Inline body.

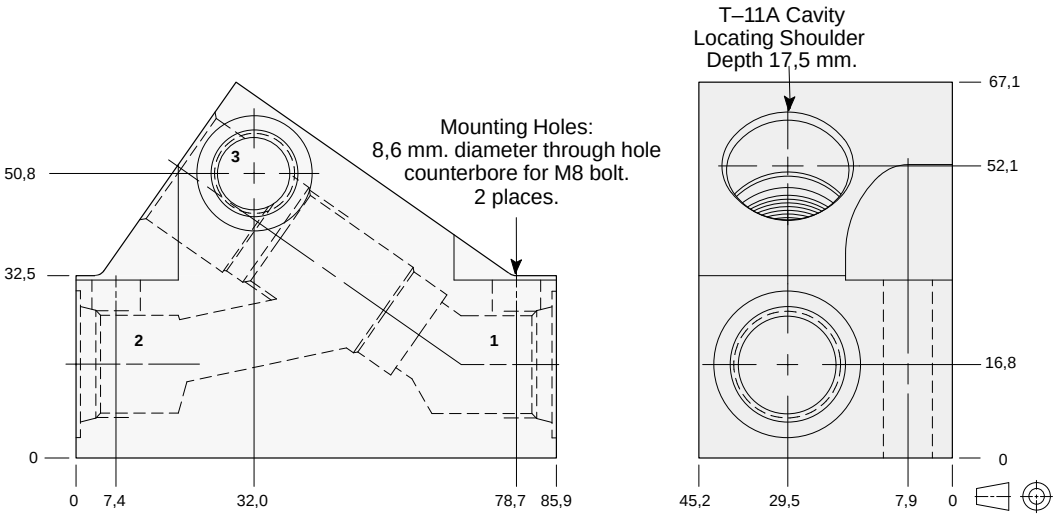

TYPICAL CARTRIDGES USED WITH THIS BODY

RBAD - *** Page 1.17
RVCA - *** Page 1.18
RSDC - *** Page 2.06
SQDB - *** Page 2.08
SCCA - *** Page 2.12
PBDB - *** Page 3.06
CBCA - *** Page 4.10
CBCG - *** Page 4.12
CBCH - *** Page 4.14
CKCB - *** Page 4.16
LODC - *** Page 9.08
LKDC - *** Page 9.10
LPDC - *** Page 9.12
LRDC - *** Page 9.14
CSAB - *** Page 10.08
CDAB - *** Page 10.10
CODA - *** Page 10.12

Instructions for ordering complete cartridge and body assemblies. Page viii

Pressure ratings, material specifications. Page 11.02

Ports 1 & 2	*Port 3*	ALUMINIUM		SG IRON	
		Model Code	*List Price*	*Model Code*	*List Price*
.25 NPTF	.25 NPTF	**EJA**		**EJA/S**	
.375 NPTF	.25 NPTF	**EJB**		**EJB/S**	
SAE-6	SAE-6	**EJI**		**EJI/S**	
SAE-8	SAE-8	**EJJ**		**EJJ/S**	
.25 BSPP	.25 BSPP	**EJT**		**EJT/S**	
.375 BSPP	.25 BSPP	**EJU**		**EJU/S**	
.50 BSPP	.25 BSPP	**EJV**		**EJV/S**	

LINE MOUNT BODIES

- Aluminium rated to 210 bar and SG Iron rated to 350 bar.

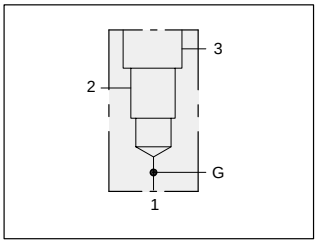

TYPICAL CARTRIDGES USED WITH THIS BODY

RBAD - *** Page 1.17
RVCA - *** Page 1.18
RSDC - *** Page 2.06
SQDB - *** Page 2.08
SCCA - *** Page 2.12
PBDB - *** Page 3.06
LODC - *** Page 9.08
LKDC - *** Page 9.10
LPDC - *** Page 9.12
LRDC - *** Page 9.14
CSAB - *** Page 10.08
CDAB - *** Page 10.10
CODA - *** Page 10.12

Instructions for ordering complete cartridge and body assemblies. Page viii

Pressure ratings, material specifications. Page 11.02

90 degree body with gauge port.

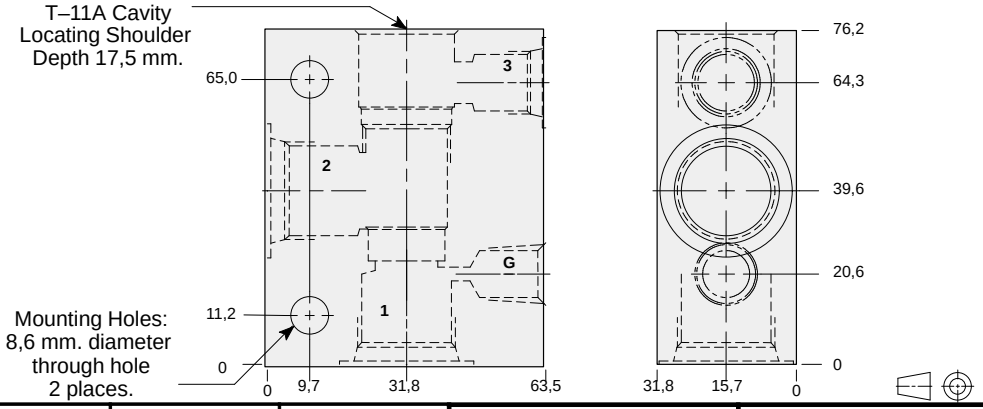

Ports 1 & 2	*Port 3*	*Gauge Port*	ALUMINIUM		SG IRON	
			Model Code	*List Price*	*Model Code*	*List Price*
.25 NPTF	.25 NPTF	.25 NPTF	**EFA**		**EFA/S**	
.375 NPTF	.25 NPTF	.25 NPTF	**EFB**		**EFB/S**	
.50 NPTF	.25 NPTF	.25 NPTF	**EFC**		**EFC/S**	
SAE-4	SAE-4	.25 NPTF	**EFH**		**EFH/S**	
SAE-6	SAE-6	.25 NPTF	**EFI**		**EFI/S**	
SAE-8	SAE-6	.25 NPTF	**EFJ**		**EFJ/S**	
SAE-10	SAE-6	.25 NPTF	**EFK**		**EFK/S**	
.25 BSPP	.25 BSPP	.25 BSPP	**EFT**		**EFT/S**	
.375 BSPP	.25 BSPP	.25 BSPP	**EFU**		**EFU/S**	
.50 BSPP	.25 BSPP	.25 BSPP	**EFV**		**EFV/S**	

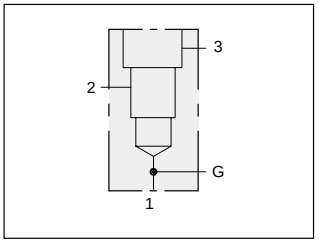

TYPICAL CARTRIDGES USED WITH THIS BODY

PPDB - *** Page 3.10
FRCA - *** Page 6.02
DPBA - *** Page 8.06
DPBB - *** Page 8.07
DPBC - *** Page 8.08
DPBD - *** Page 8.09

Instructions for ordering complete cartridge and body assemblies. Page viii

Pressure ratings, material specifications. Page 11.02

90 degree body with high capacity port 3 and gauge port.

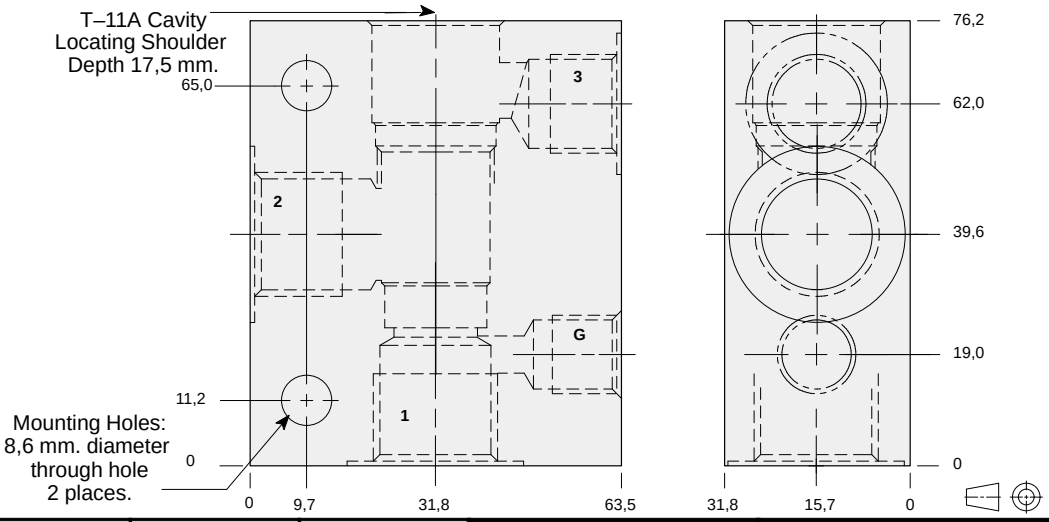

Ports 1 & 2	*Port 3*	*Gauge Port*	ALUMINIUM		SG IRON	
			Model Code	*List Price*	*Model Code*	*List Price*
.375 NPTF	.375 NPTF	.25 NPTF	**ELB**		**ELB/S**	
.50 NPTF	.375 NPTF	.25 NPTF	**ELC**		**ELC/S**	
SAE-6	SAE-6	.25 NPTF	**ELI**		**ELI/S**	
SAE-8	SAE-8	.25 NPTF	**ELJ**		**ELJ/S**	
SAE-10	SAE-8	.25 NPTF	**ELK**		**ELK/S**	
.50 BSPP	.375 BSPP	.25 BSPP	**ELV**		**ELV/S**	

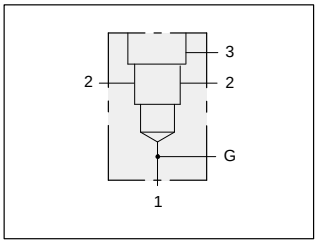

TYPICAL CARTRIDGES USED WITH THIS BODY

PBDB - *** Page 3.06

Instructions for ordering complete cartridge and body assemblies. Page viii

Pressure ratings, material specifications. Page 11.02

Through port body with gauge port for reducing applications.

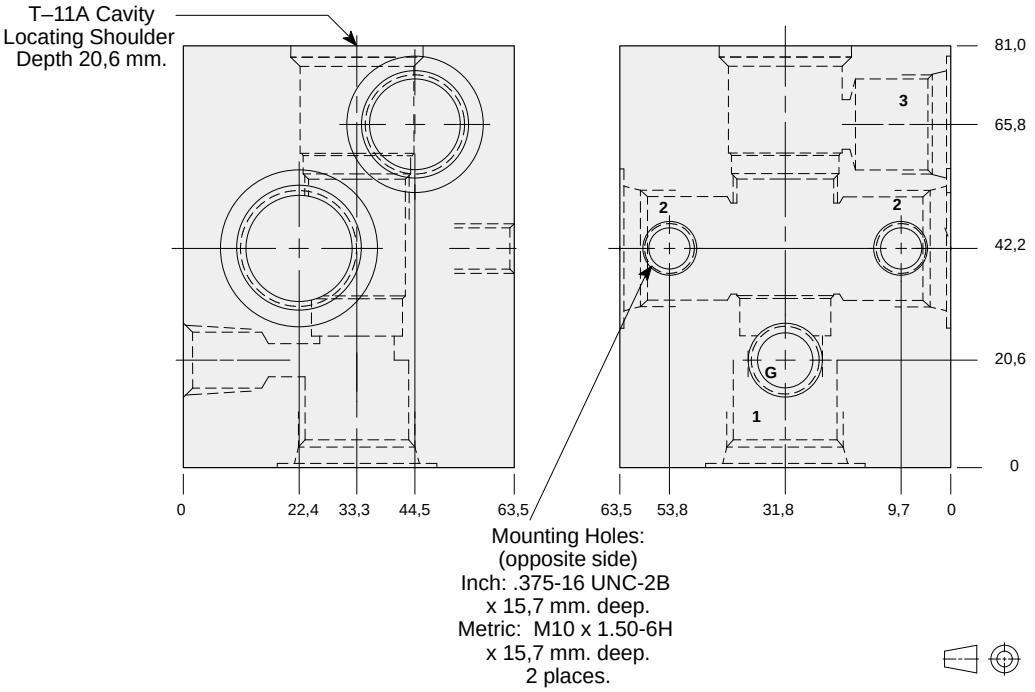

Mounting Holes:
(opposite side)
Inch: .375-16 UNC-2B
x 15,7 mm. deep.
Metric: M10 x 1.50-6H
x 15,7 mm. deep.
2 places.

Ports 1 & 2	*Port 3*	*Gauge Port*	ALUMINIUM		SG IRON	
			Model Code	*List Price*	*Model Code*	*List Price*
.25 NPTF	.25 NPTF	.25 NPTF	**WRM**		**WRM/S**	
.375 NPTF	.25 NPTF	.25 NPTF	**WRN**		**WRN/S**	
.50 NPTF	.25 NPTF	.25 NPTF	**WRO**		**WRO/S**	
SAE-6	SAE-6	.25 NPTF	**WRP**		**WRP/S**	
SAE-8	SAE-6	.25 NPTF	**WRQ**		**WRQ/S**	
SAE-10	SAE-6	.25 NPTF	**WRR**		**WRR/S**	
.25 BSPP	.25 BSPP	.25 BSPP	**WRS**		**WRS/S**	
.375 BSPP	.25 BSPP	.25 BSPP	**WRT**		**WRT/S**	
.50 BSPP	.25 BSPP	.25 BSPP	**WRU**		**WRU/S**	
.375 NPTF	.375 NPTF	.25 NPTF	**WRX**		**WRX/S**	
.50 NPTF	.375 NPTF	.25 NPTF	**WRY**		**WRY/S**	
SAE-8	SAE-8	.25 NPTF	**WRZ**		**WRZ/S**	
SAE-10	SAE-8	.25 NPTF	**WSB**		**WSB/S**	
.375 BSPP	.375 BSPP	.25 BSPP	**WSC**		**WSC/S**	
.50 BSPP	.375 BSPP	.25 BSPP	**WSD**		**WSD/S**	

LINE MOUNT BODIES

- Aluminium rated to 210 bar and SG Iron rated to 350 bar.

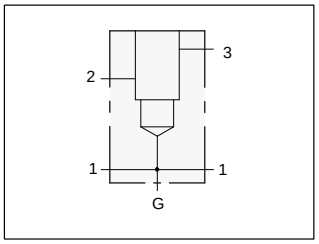

TYPICAL CARTRIDGES USED WITH THIS BODY

RBAD - ***	Page	1.17
RVCA - ***	Page	1.18
RSDC - ***	Page	2.06
SQDB - ***	Page	2.08
SCCA - ***	Page	2.12
PBDB - ***	Page	3.06
LODC - ***	Page	9.08

Instructions for ordering complete cartridge and body assemblies. Page viii

Pressure ratings, material specifications. Page 11.02

Through port body with gauge port.

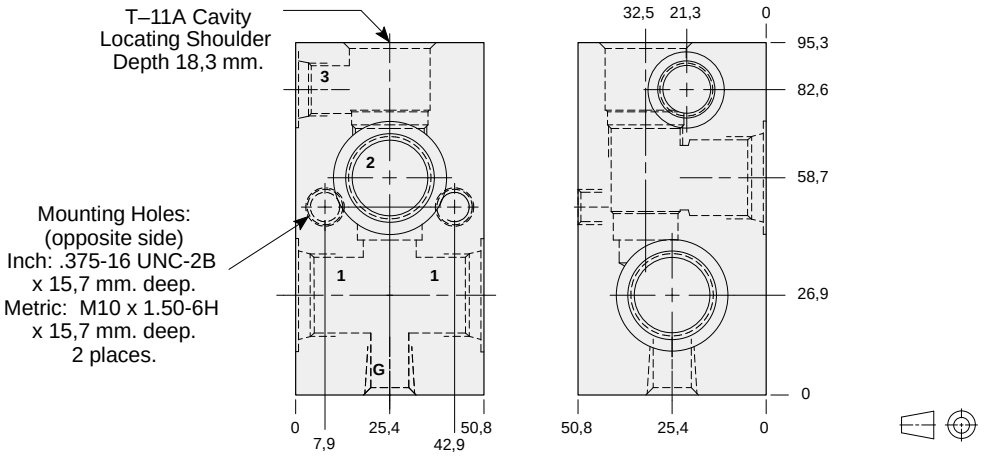

Mounting Hole Dimensions	*Ports 1 & 2*	*Port 3*	*Gauge Port*	ALUMINIUM		SG IRON	
				Model Code	*List Price*	*Model Code*	*List Price*
Inch	.25 NPTF	.25 NPTF	.25 NPTF	**EHA**		**EHA/S**	
Inch	.375 NPTF	.25 NPTF	.25 NPTF	**EHB**		**EHB/S**	
Inch	.50 NPTF	.25 NPTF	.25 NPTF	**EHC**		**EHC/S**	
Inch	SAE-6	SAE-6	.25 NPTF	**EHI**		**EHI/S**	
Inch	SAE-8	SAE-6	.25 NPTF	**EHJ**		**EHJ/S**	
Inch	SAE-10	SAE-6	.25 NPTF	**EHK**		**EHK/S**	
Metric	.25 BSPP	.25 BSPP	.25 BSPP	**EHT**		**EHT/S**	
Metric	.375 BSPP	.25 BSPP	.25 BSPP	**EHU**		**EHU/S**	
Metric	.50 BSPP	.25 BSPP	.25 BSPP	**EHV**		**EHV/S**	

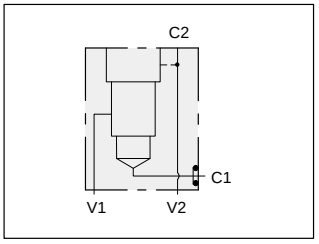

TYPICAL CARTRIDGES USED WITH THIS BODY

CBGA - ***	Page	4.11
CBCG - ***	Page	4.12
CBCH - ***	Page	4.14
CKCB - ***	Page	4.16

Cartridge seal type determines O–ring type.

Instructions for ordering complete cartridge and body assemblies. Page viii

Pressure ratings, material specifications. Page 11.02

Gasket mount body for load control applications.

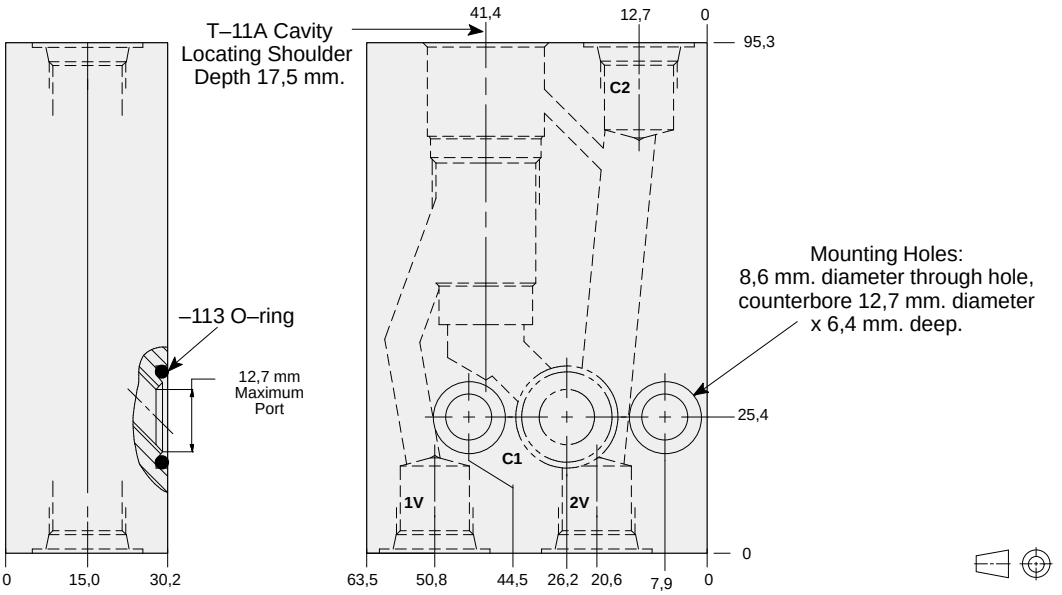

Ports C2, V1, V2	ALUMINIUM		SG IRON	
	Model Code	*List Price*	*Model Code*	*List Price*
.375 NPTF	**ZTN**		**ZTN/S**	
SAE-6	**ZTC**		**ZTC/S**	
.375 BSPP	**ZTD**		**ZTD/S**	

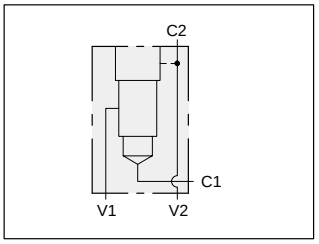

TYPICAL CARTRIDGES USED WITH THIS BODY

CBCA - *** Page 4.10
CBCG - *** Page 4.12
CBCH - *** Page 4.14
CKCB - *** Page 4.16

Instructions for ordering complete cartridge and body assemblies. Page viii

Pressure ratings, material specifications. Page 11.02

Nipple mount body for load control applications.

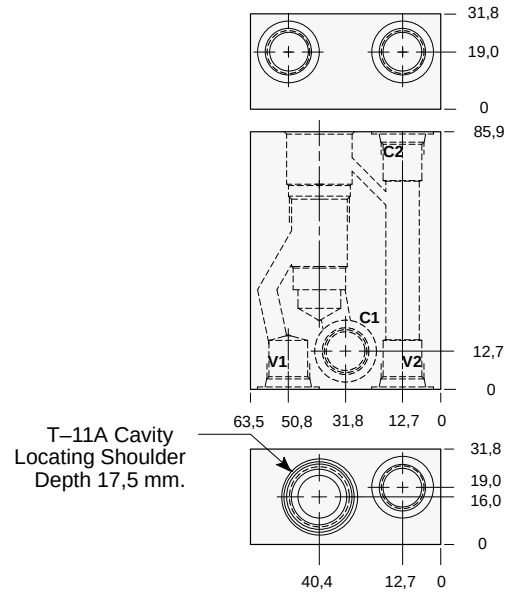

Port C1	*Ports C2, V1, V2*	ALUMINIUM		SG IRON	
		Model Code	*List Price*	*Model Code*	*List Price*
SAE-6	SAE-6	**ZRK**		**ZRK/S**	
.375 NPTF	SAE-6	**ZTS**		**ZTS/S**	
.375 NPTF	.375 NPTF	**ZTZ**		**ZTZ/S**	

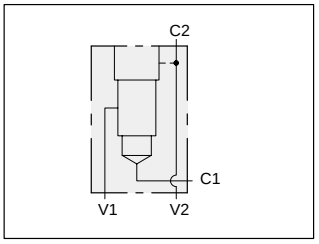

TYPICAL CARTRIDGES USED WITH THIS BODY

CBCA - *** Page 4.10
CBCG - *** Page 4.12
CBCH - *** Page 4.14
CKCB - *** Page 4.16

Instructions for ordering complete cartridge and body assemblies. Page viii

Pressure ratings, material specifications. Page 11.02

Nipple mount body for load control applications.

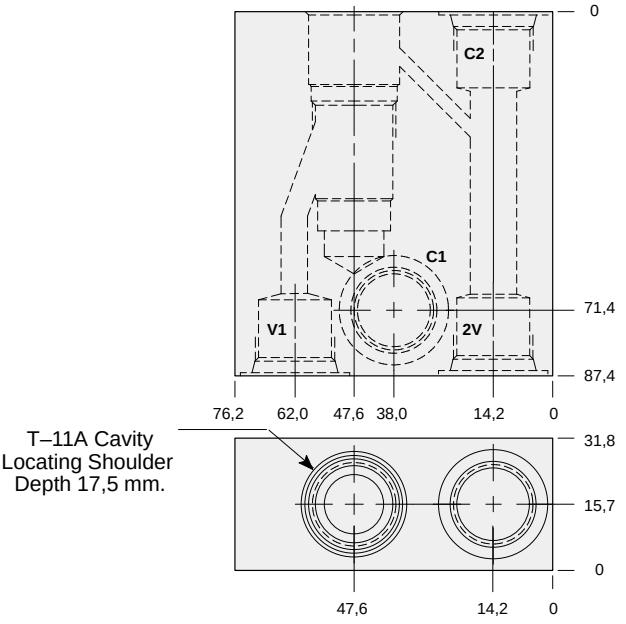

Port C1	*Ports C2, V1, V2*	ALUMINIUM		SG IRON	
		Model Code	*List Price*	*Model Code*	*List Price*
SAE-8	SAE-8	**WPE**		**WPE/S**	
SAE-8	SAE-6	**ZRL**		**ZRL/S**	
.50 NPTF	.375 NPTF	**ZTY**		**ZTY/S**	

LINE MOUNT BODIES

- Aluminium rated to 210 bar and SG Iron rated to 350 bar.

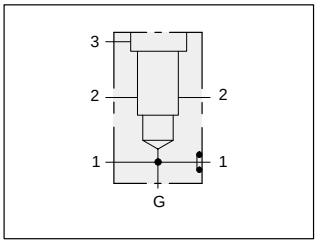

Flange mount through port .75” SAE Code 61 body with threaded outlet and gauge port.

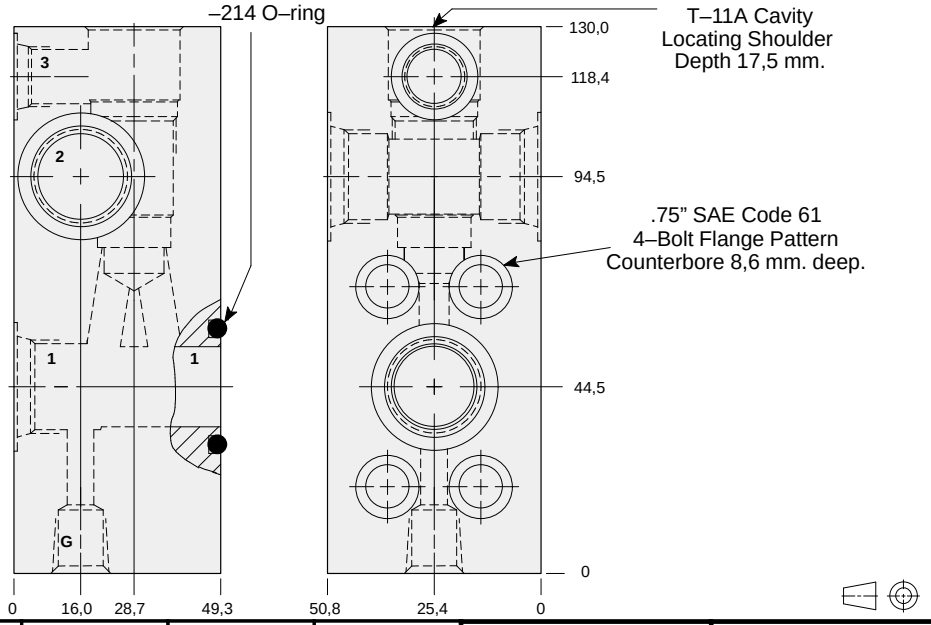

Mounting Hole Dimensions	*Threaded Ports 1 & 2*	*Port 3*	*Gauge Port*	ALUMINIUM		SG IRON	
				Model Code	*List Price*	*Model Code*	*List Price*
Inch	SAE-10	SAE-6	.25 NPTF	**WYY**		**WYY/S**	
Inch	.50 NPTF	.25 NPTF	.25 NPTF	**WYZ**		**WYZ/S**	
Metric	.50 BSPP	.25 BSPP	.25 BSPP	**WYX/M**		**WYX/T**	

TYPICAL CARTRIDGES USED WITH THIS BODY

RVCA - *** Page 1.18
RSDC - *** Page 2.06
SQDB - *** Page 2.08
SCCA - *** Page 2.12
LODC - *** Page 9.08
LKDC - *** Page 9.10
LPDC - *** Page 9.12
LRDC - *** Page 9.14

Cartridge seal type determines O–ring type.

Instructions for ordering complete cartridge and body assemblies. Page viii

Pressure ratings, material specifications. Page 11.02

SAE Specifications. Page 11.03

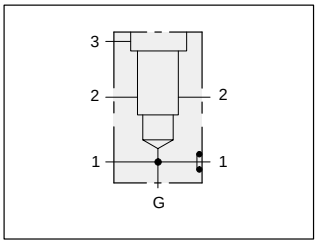

Flange mount through port .75” SAE Code 62 body with threaded outlet and gauge port.

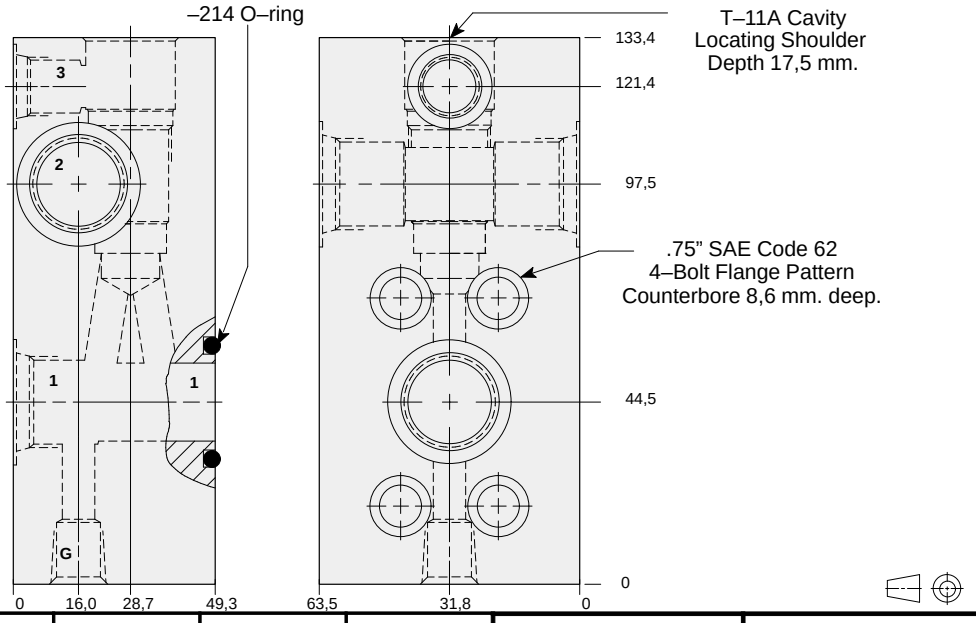

Mounting Hole Dimensions	*Threaded Ports 1 & 2*	*Port 3*	*Gauge Port*	ALUMINIUM		SG IRON	
				Model Code	*List Price*	*Model Code*	*List Price*
Inch	.50 NPTF	.25 NPTF	.25 NPTF	**WYK**		**WYK/S**	
Inch	SAE-10	SAE-6	.25 NPTF	**WYJ**		**WYJ/S**	
Metric	.50 BSPP	.25 BSPP	.25 BSPP	**WYI/M**		**WYI/T**	

TYPICAL CARTRIDGES USED WITH THIS BODY

RVCA - *** Page 1.18
RSDC - *** Page 2.06
SQDB - *** Page 2.08
SCCA - *** Page 2.12
LODC - *** Page 9.08
LKDC - *** Page 9.10
LPDC - *** Page 9.12
LRDC - *** Page 9.14

Cartridge seal type determines O–ring type.

Instructions for ordering complete cartridge and body assemblies. Page viii

Pressure ratings, material specifications. Page 11.02

SAE Specifications. Page 11.03

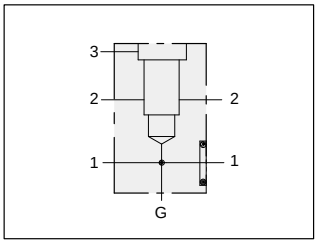

Sandwich mount through port .75” SAE Code 61 body with gauge port.

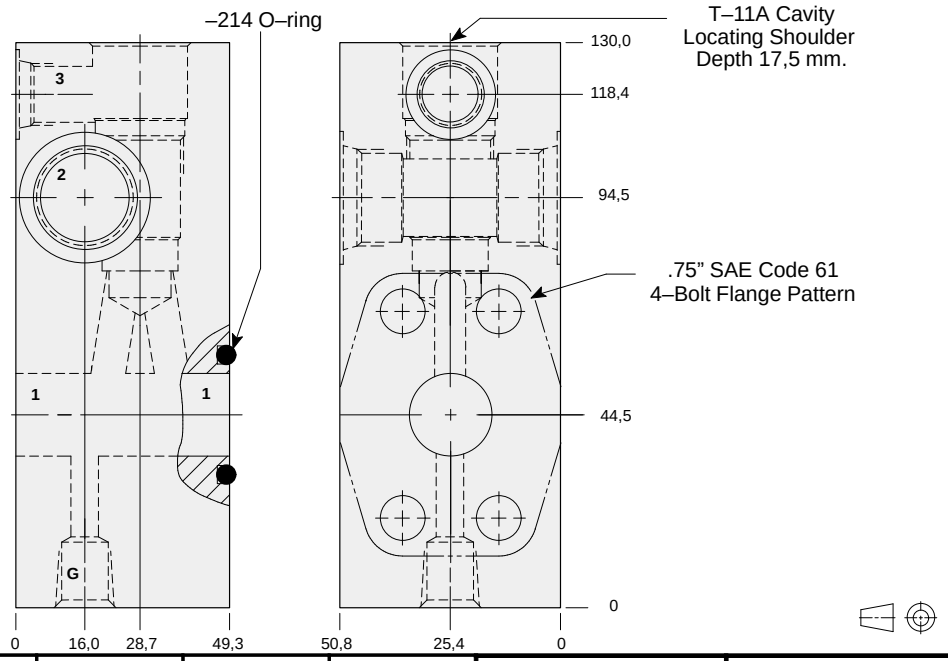

Mounting Hole Dimensions	*Port 2*	*Port 3*	*Gauge Port*	ALUMINIUM		SG IRON	
				Model Code	*List Price*	*Model Code*	*List Price*
Inch	SAE-10	SAE-6	.25 NPTF	**ZML**		**ZML/S**	
Metric	.50 BSPP	.25 BSPP	.25 BSPP	**ZMK/M**		**ZMK/T**	

TYPICAL CARTRIDGES USED WITH THIS BODY

RVCA - *** Page 1.18
RSDC - *** Page 2.06
SQDB - *** Page 2.08
SCCA - *** Page 2.12
LODC - *** Page 9.08
LKDC - *** Page 9.10
LPDC - *** Page 9.12
LRDC - *** Page 9.14

Cartridge seal type determines O–ring type.

Instructions for ordering complete cartridge and body assemblies. Page viii

Pressure ratings, material specifications. Page 11.02

SAE Specifications. Page 11.03

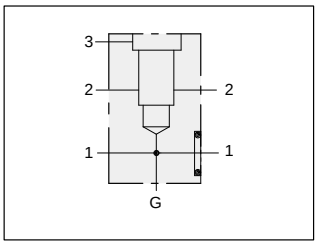

Sandwich mount through port .75” SAE Code 62 body with gauge port.

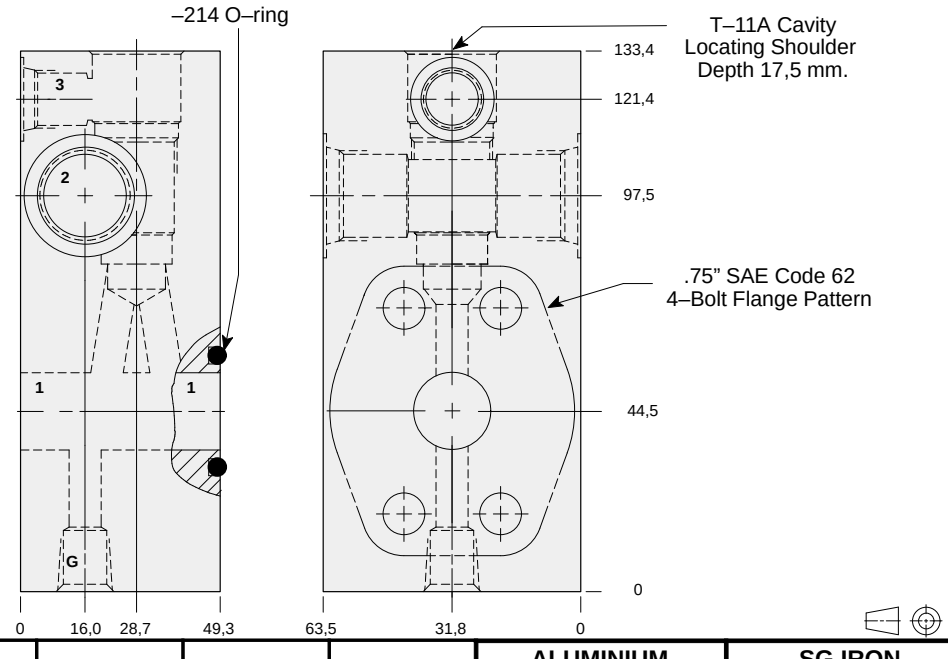

Mounting Hole Dimensions	*Port 2*	*Port 3*	*Gauge Port*	ALUMINIUM		SG IRON	
				Model Code	*List Price*	*Model Code*	*List Price*
Inch	.50 NPTF	.25 NPTF	.25 NPTF	**WYN**		**WYN/S**	
Inch	SAE-10	SAE-6	.25 NPTF	**WYM**		**WYM/S**	
Metric	.50 BSPP	.25 BSPP	.25 BSPP	**WYL/M**		**WYL/T**	

TYPICAL CARTRIDGES USED WITH THIS BODY

RVCA - *** Page 1.18
RSDC - *** Page 2.06
SQDB - *** Page 2.08
SCCA - *** Page 2.12
LODC - *** Page 9.08
LKDC - *** Page 9.10
LPDC - *** Page 9.12
LRDC - *** Page 9.14

Cartridge seal type determines O–ring type.

Instructions for ordering complete cartridge and body assemblies. Page viii

Pressure ratings, material specifications. Page 11.02

SAE Specifications. Page 11.03

LINE MOUNT BODIES

- Aluminium rated to 210 bar and SG Iron rated to 350 bar.

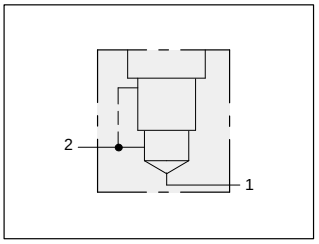

Inline body with port 3 connected to port 2.

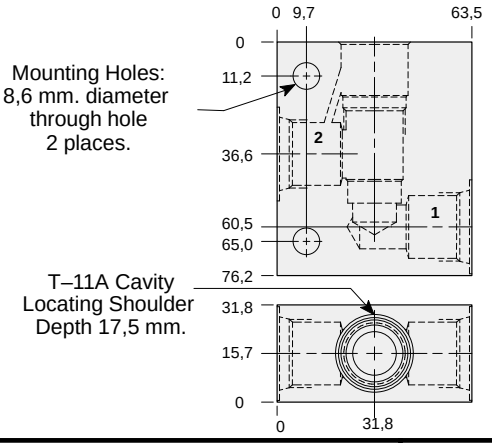

TYPICAL CARTRIDGES USED WITH THIS BODY

CBCA - *** Page 4.10
CBCG - *** Page 4.12
CBCH - *** Page 4.14

Instructions for ordering complete cartridge and body assemblies. Page viii

Pressure ratings, material specifications. Page 11.02

Ports 1 & 2	ALUMINIUM		SG IRON	
	Model Code	*List Price*	*Model Code*	*List Price*
.25 NPTF	**EDA**		**EDA/S**	
.375 NPTF	**EDB**		**EDB/S**	
.50 NPTF	**EDC**		**EDC/S**	
SAE-6	**EDI**		**EDI/S**	
SAE-8	**EDJ**		**EDJ/S**	
SAE-10	**EDK**		**EDK/S**	
.25 BSPP	**EDT**		**EDT/S**	
.375 BSPP	**EDU**		**EDU/S**	
.50 BSPP	**EDV**		**EDV/S**	

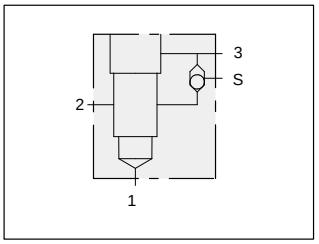

90 degree body with integral shuttle

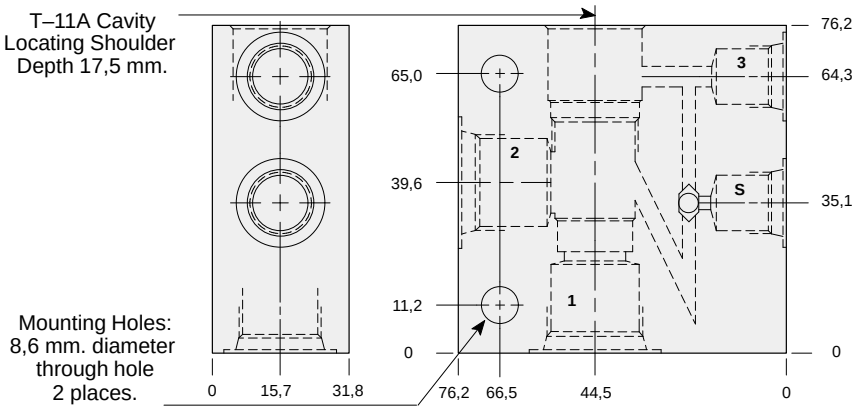

TYPICAL CARTRIDGES USED WITH THIS BODY

CBCA - *** Page 4.10
CBCG - *** Page 4.12
CBCH - *** Page 4.14
CKCB - *** Page 4.16

Instructions for ordering complete cartridge and body assemblies. Page viii

Pressure ratings, material specifications. Page 11.02

Ports 1 & 2	*Ports S & 3*	ALUMINIUM		SG IRON	
		Model Code	*List Price*	*Model Code*	*List Price*
.25 NPTF	.25 NPTF	**EGA**		**EGA/S**	
.375 NPTF	.25 NPTF	**EGB**		**EGB/S**	
.50 NPTF	.25 NPTF	**EGC**		**EGC/S**	
SAE-6	SAE-6	**EGI**		**EGI/S**	
SAE-8	SAE-6	**EGJ**		**EGJ/S**	
SAE-10	SAE-6	**EGK**		**EGK/S**	
.25 BSPP	.25 BSPP	**EGT**		**EGT/S**	
.375 BSPP	.25 BSPP	**EGU**		**EGU/S**	
.50 BSPP	.25 BSPP	**EGV**		**EGV/S**	

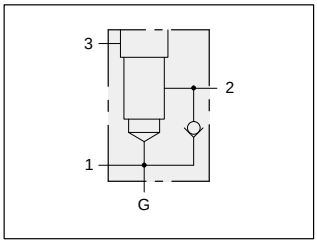

TYPICAL CARTRIDGES USED WITH THIS BODY

PBDB - *** Page 3.06

Cartridge seal type determines check valve seal type.

Instructions for ordering complete cartridge and body assemblies. Page viii

Pressure ratings, material specifications. Page 11.02

Body with reverse free flow check and gauge port for reducing applications.

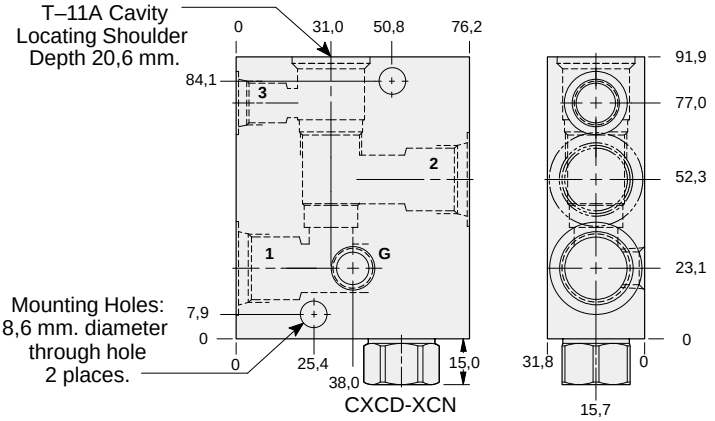

Ports 1 & 2	*Port 3*	*Gauge Port*	ALUMINIUM		SG IRON	
			Model Code	*List Price*	*Model Code*	*List Price*
.25 NPTF	.25 NPTF	.25 NPTF	**E2A**		**E2A/S**	
.375 NPTF	.25 NPTF	.25 NPTF	**E2B**		**E2B/S**	
.50 NPTF	.25 NPTF	.25 NPTF	**E2C**		**E2C/S**	
SAE-6	SAE-6	.25 NPTF	**E2I**		**E2I/S**	
SAE-8	SAE-6	.25 NPTF	**E2J**		**E2J/S**	
SAE-10	SAE-6	.25 NPTF	**E2K**		**E2K/S**	
.25 BSPP	.25 BSPP	.25 BSPP	**E2T**		**E2T/S**	
.375 BSPP	.25 BSPP	.25 BSPP	**E2U**		**E2U/S**	
.50 BSPP	.25 BSPP	.25 BSPP	**E2V**		**E2V/S**	

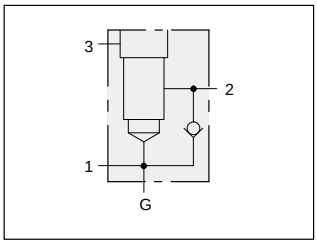

TYPICAL CARTRIDGES USED WITH THIS BODY

PBDB - *** Page 3.06

Cartridge seal type determines check valve seal type.

Instructions for ordering complete cartridge and body assemblies. Page viii

Pressure ratings, material specifications. Page 11.02

Body with high capacity port 3 reverse free flow check and gauge port for reducing/relieving applications.

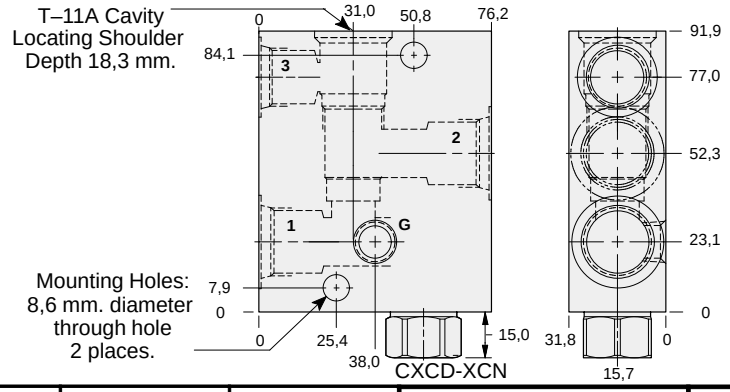

Ports 1 & 2	*Port 3*	*Gauge Port*	ALUMINIUM		SG IRON	
			Model Code	*List Price*	*Model Code*	*List Price*
.25 NPTF	.25 NPTF	.25 NPTF	**E4A**		**E4A/S**	
.375 NPTF	.375 NPTF	.25 NPTF	**E4B**		**E4B/S**	
.50 NPTF	.375 NPTF	.25 NPTF	**E4C**		**E4C/S**	
SAE-6	SAE-6	.25 NPTF	**E4I**		**E4I/S**	
SAE-8	SAE-8	.25 NPTF	**4EJ**		**E4J/S**	
SAE-10	SAE-8	.25 NPTF	**E4K**		**E4K/S**	
.25 BSPP	.25 BSPP	.25 BSPP	**E4T**		**E4T/S**	
.375 BSPP	.375 BSPP	.25 BSPP	**E4U**		**E4U/S**	
.50 BSPP	.375 BSPP	.25 BSPP	**E4V**		**E4V/S**	

LINE MOUNT BODIES

- Aluminium rated to 210 bar and SG Iron rated to 350 bar.

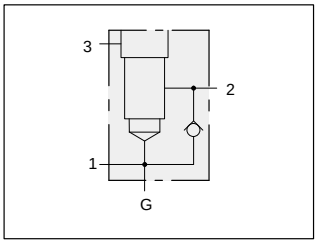

TYPICAL CARTRIDGES USED WITH THIS BODY

RVCA - *** Page 1.18
RSDC - *** Page 2.06
SQDB - *** Page 2.08

Cartridge seal type determines check valve seal type.

Instructions for ordering complete cartridge and body assemblies. Page viii

Pressure ratings, material specifications. Page 11.02

Body with reverse free flow check and gauge port.

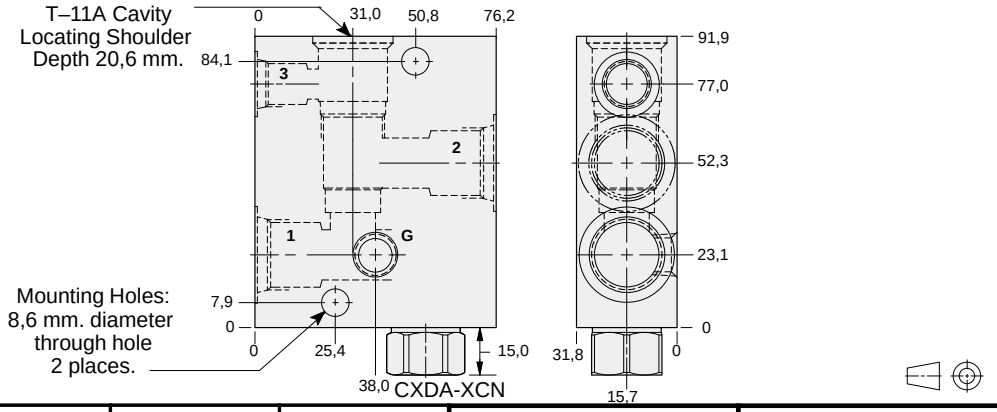

Ports 1 & 2	*Port 3*	*Gauge Port*	ALUMINIUM		SG IRON	
			Model Code	*List Price*	*Model Code*	*List Price*
.25 NPTF	.25 NPTF	.25 NPTF	**E6A**		**E6A/S**	
.375 NPTF	.25 NPTF	.25 NPTF	**E6B**		**E6B/S**	
.50 NPTF	.25 NPTF	.25 NPTF	**E6C**		**E6C/S**	
SAE-6	SAE-6	.25 NPTF	**E6I**		**E6I/S**	
SAE-8	SAE-6	.25 NPTF	**E6J**		**E6J/S**	
SAE-10	SAE-6	.25 NPTF	**E6K**		**E6K/S**	
.25 BSPP	.25 BSPP	.25 BSPP	**E6T**		**E6T/S**	
.375 BSPP	.25 BSPP	.25 BSPP	**E6U**		**E6U/S**	
.50 BSPP	.25 BSPP	.25 BSPP	**E6V**		**E6V/S**	

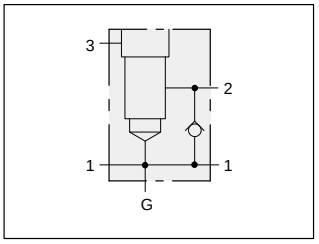

TYPICAL CARTRIDGES USED WITH THIS BODY

RSDC - *** Page 2.06
SQDB - *** Page 2.08

Cartridge seal type determines check valve seal type.

Instructions for ordering complete cartridge and body assemblies. Page viii

Pressure ratings, material specifications. Page 11.02

Through port body with reverse free flow check and gauge port.

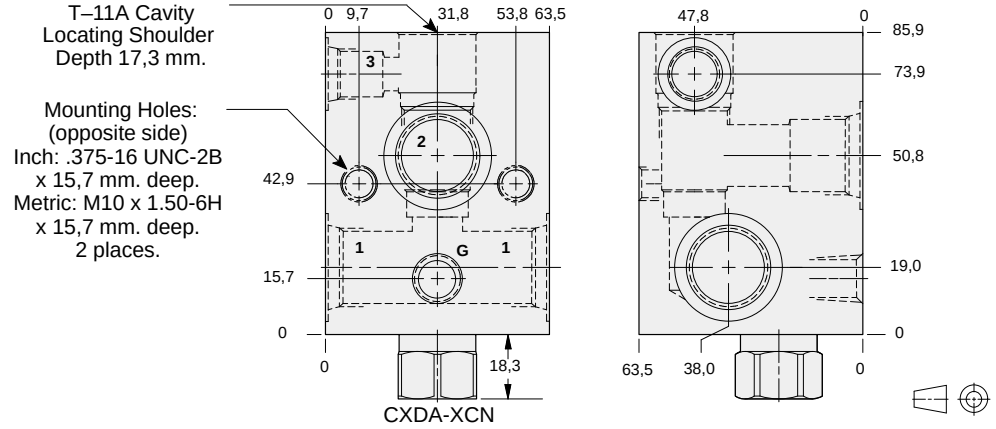

Mounting Hole Dimensions	*Ports 1 & 2*	*Port 3*	*Gauge Port*	ALUMINIUM		SG IRON	
				Model Code	*List Price*	*Model Code*	*List Price*
Inch	.25 NPTF	.25 NPTF	.25 NPTF	**E7A**		**E7A/S**	
Inch	.375 NPTF	.25 NPTF	.25 NPTF	**E7B**		**E7B/S**	
Inch	.50 NPTF	.25 NPTF	.25 NPTF	**E7C**		**E7C/S**	
Inch	SAE-6	SAE-6	.25 NPTF	**E7I**		**E7I/S**	
Inch	SAE-8	SAE-6	.25 NPTF	**E7J**		**E7J/S**	
Inch	SAE-10	SAE-6	.25 NPTF	**E7K**		**E7K/S**	
Metric	.25 BSPP	.25 BSPP	.25 BSPP	**E7T**		**E7T/S**	
Metric	.375 BSPP	.25 BSPP	.25 BSPP	**E7U**		**E7U/S**	
Metric	.50 BSPP	.25 BSPP	.25 BSPP	**E7V**		**E7V/S**	

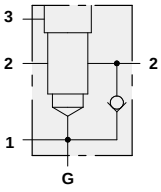

TYPICAL CARTRIDGES USED WITH THIS BODY

PBDB - *** Page 3.06

Cartridge seal type determines check valve seal type.

Instructions for ordering complete cartridge and body assemblies. Page viii

Pressure ratings, material specifications. Page 11.02

Through port body with reverse free flow check and gauge port for reducing applications.

T–11A Cavity Locating Shoulder Depth 18,3 mm.

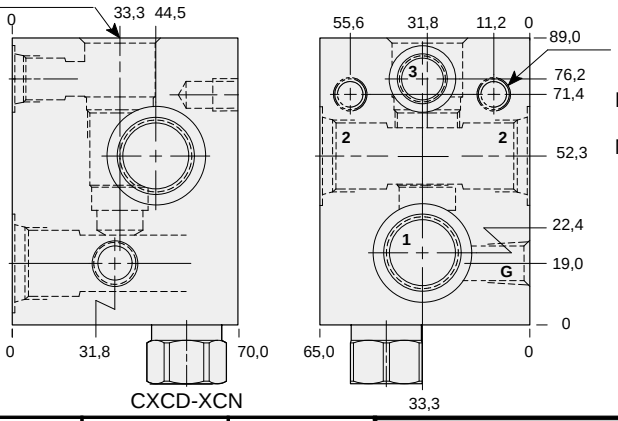

Mounting Holes: (opposite side) Inch: .375-16 UNC-2B x 15,7 mm. deep. Metric: M10 x 1.50-6H x 15,7 mm. deep. 2 places.

Mounting Hole Dimensions	*Ports 1 & 2*	*Port 3*	*Gauge Port*	ALUMINIUM		SG IRON	
				Model Code	*List Price*	*Model Code*	*List Price*
Inch	.25 NPTF	.25 NPTF	.25 NPTF	**E3A**		**E3A/S**	
Inch	.375 NPTF	.25 NPTF	.25 NPTF	**E3B**		**E3B/S**	
Inch	.50 NPTF	.25 NPTF	.25 NPTF	**E3C**		**E3C/S**	
Inch	SAE-6	SAE-6	.25 NPTF	**E3I**		**E3I/S**	
Inch	SAE-8	SAE-6	.25 NPTF	**E3J**		**E3J/S**	
Inch	SAE-10	SAE-6	.25 NPTF	**E3K**		**E3K/S**	
Metric	.25 BSPP	.25 BSPP	.25 BSPP	**E3T**		**E3T/S**	
Metric	.375 BSPP	.25 BSPP	.25 BSPP	**E3U**		**E3U/S**	
Metric	.50 BSPP	.25 BSPP	.25 BSPP	**E3V**		**ESV/S**	

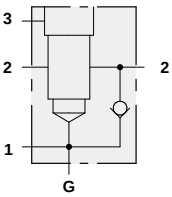

TYPICAL CARTRIDGES USED WITH THIS BODY

PBDB - *** Page 3.06

Cartridge seal type determines check valve seal type.

Instructions for ordering complete cartridge and body assemblies. Page viii

Pressure ratings, material specifications. Page 11.02

Through port body with high capacity port 3 reverse free flow check and gauge port for reducing/relieving applications.

Mounting Holes: Inch: .375-16 UNC-2B x 15,7 mm. deep. Metric: M10 x 1.50-6H x 15,7 mm. deep. 2 places.

T–11A Cavity Locating Shoulder Depth 18,3 mm.

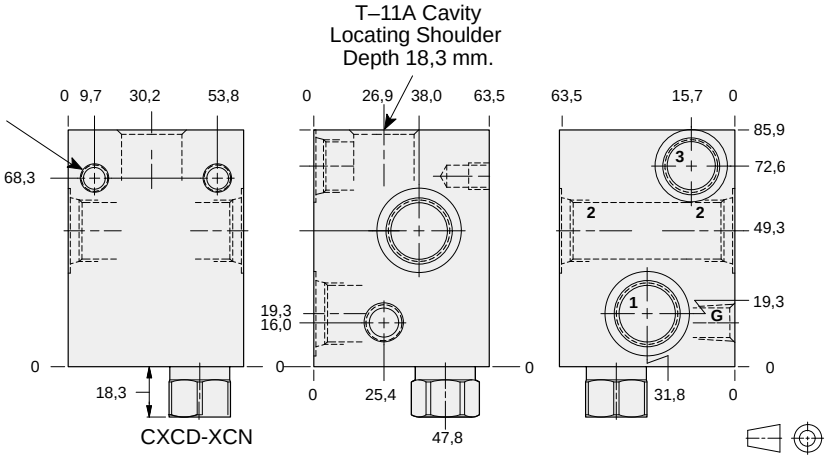

Mounting Hole Dimensions	*Ports 1 & 2*	*Port 3*	*Gauge Port*	ALUMINIUM		SG IRON	
				Model Code	*List Price*	*Model Code*	*List Price*
Inch	.375 NPTF	.375 NPTF	.25 NPTF	**E5B**		**E5B/S**	
Inch	.50 NPTF	.375 NPTF	.25 NPTF	**E5C**		**E5C/S**	
Inch	SAE-8	SAE-8	.25 NPTF	**E5J**		**E5J/S**	
Inch	SAE-10	SAE-8	.25 NPTF	**E5K**		**E5K/S**	
Metric	.375 BSPP	.375 BSPP	.25 BSPP	**E5U**		**E5U/S**	
Metric	.50 BSPP	.375 BSPP	.25 BSPP	**E5V**		**E5V/S**	

LINE MOUNT BODIES

- Aluminium rated to 210 bar and SG Iron rated to 350 bar.

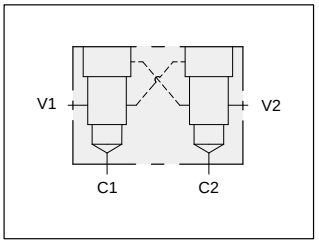

Two cavity 90 degree cross–piloted body for load control applications.

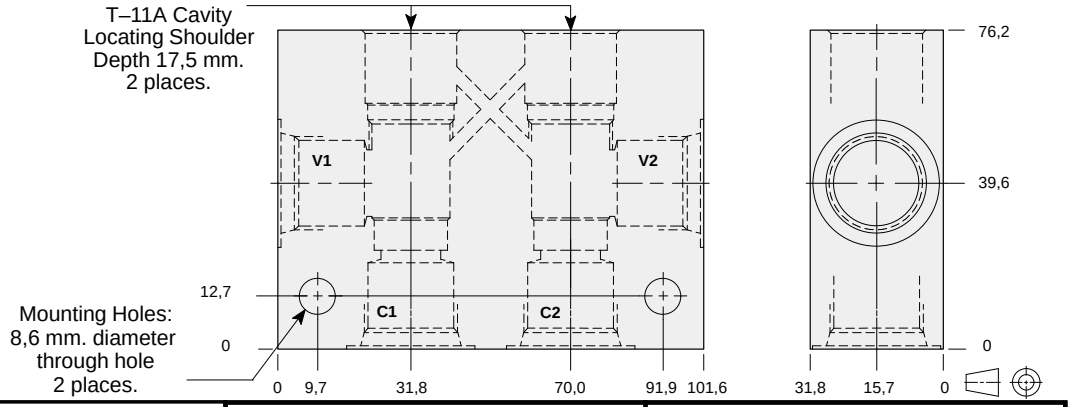

TYPICAL CARTRIDGES USED WITH THIS BODY

CBCA - *** Page 4.10
CBCG - *** Page 4.12
CBCH - *** Page 4.14
CKCB - *** Page 4.16

Instructions for ordering complete cartridge and body assemblies. Page viii

Pressure ratings, material specifications. Page 11.02

Ports C1, C2, & V1, V2	ALUMINIUM		SG IRON	
	Model Code	*List Price*	*Model Code*	*List Price*
.25 NPTF	**YEA**		**YEA/S**	
.375 NPTF	**YEB**		**YEB/S**	
.50 NPTF	**YEC**		**YEC/S**	
SAE-6	**YEI**		**YEI/S**	
SAE-8	**YEJ**		**YEJ/S**	
SAE-10	**YEK**		**YEK/S**	
.25 BSPP	**YET**		**YET/S**	
.375 BSPP	**YEU**		**YEU/S**	
.50 BSPP	**YEV**		**YEV/S**	

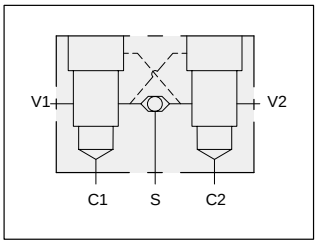

Two cavity 90 degree cross–piloted body with shuttle for load control applications.

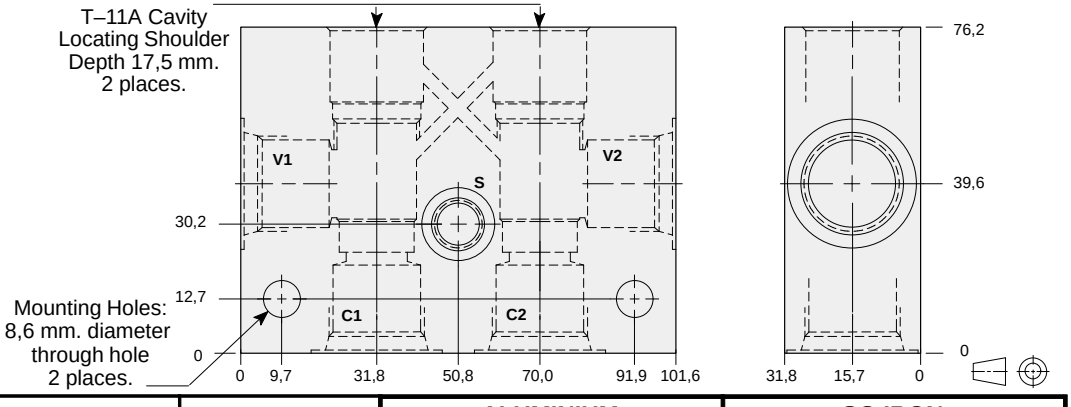

TYPICAL CARTRIDGES USED WITH THIS BODY

CBCA - *** Page 4.10
CBCG - *** Page 4.12
CBCH - *** Page 4.14
CKCB - *** Page 4.16

Instructions for ordering complete cartridge and body assemblies. Page viii

Pressure ratings, material specifications. Page 11.02

Ports C1, C2, & V1, V2	*Port S*	ALUMINIUM		SG IRON	
		Model Code	*List Price*	*Model Code*	*List Price*
.25 NPTF	.25 NPTF	**YGA**		**YGA/S**	
.375 NPTF	.25 NPTF	**YGB**		**YGB/S**	
.50 NPTF	.25 NPTF	**YGC**		**YGC/S**	
SAE-6	SAE-4	**YGI**		**YGI/S**	
SAE-8	SAE-4	**YGJ**		**YGJ/S**	
SAE-10	SAE-4	**YGK**		**YGK/S**	
.25 BSPP	.25 BSPP	**YGT**		**YGT/S**	
.375 BSPP	.25 BSPP	**YGU**		**YGU/S**	
.50 BSPP	.25 BSPP	**YGV**		**YGV/S**	

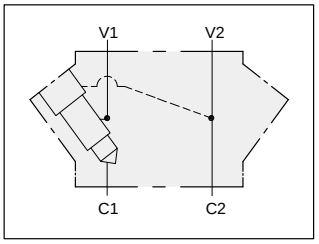

Inline body for load control applications.

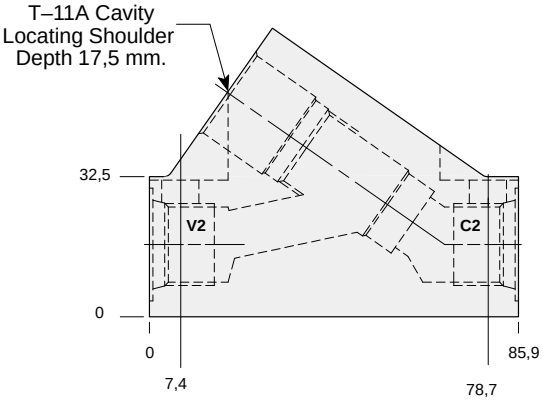

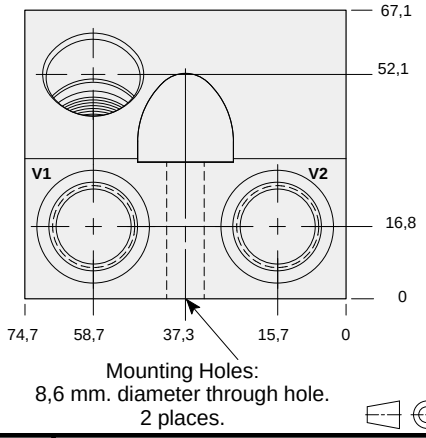

TYPICAL CARTRIDGES USED WITH THIS BODY

CBCA - *** Page 4.10
CBCG - *** Page 4.12
CBCH - *** Page 4.14
CKCB - *** Page 4.16

Instructions for ordering complete cartridge and body assemblies. Page viii

Pressure ratings, material specifications. Page 11.02

Ports C1, C2, & V1, V2	ALUMINIUM		SG IRON	
	Model Code	*List Price*	*Model Code*	*List Price*
.25 NPTF	**XVF**		**XVF/S**	
.375 NPTF	**XVG**		**XVG/S**	
SAE-6	**XVH**		**XVH/S**	
SAE-8	**XVI**		**XVI/S**	
.25 BSPP	**XVJ**		**XVJ/S**	
.375 BSPP	**XVK**		**XVK/S**	

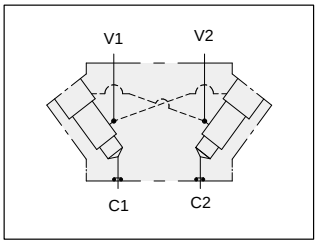

Two cavity inline gasket mount cross–piloted body for load control applications.

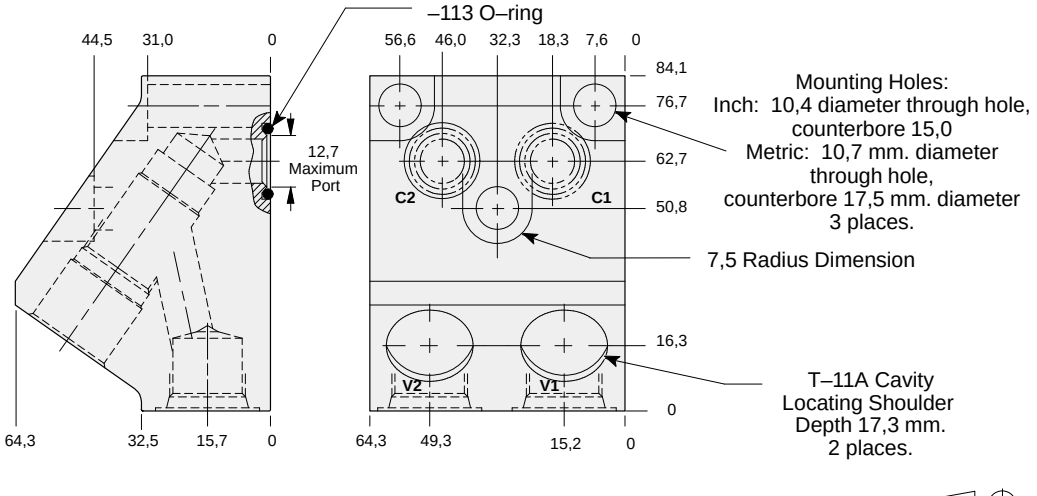

TYPICAL CARTRIDGES USED WITH THIS BODY

CBCA - *** Page 4.10
CBCG - *** Page 4.12
CBCH - *** Page 4.14
CKCB - *** Page 4.16

Cartridge seal type determines O-ring type.

Instructions for ordering complete cartridge and body assemblies. Page viii

Pressure ratings, material specifications. Page 11.02

Mounting Hole Dimensions	*Ports V1, & V2*	ALUMINIUM		SG IRON	
		Model Code	*List Price*	*Model Code*	*List Price*
Inch	.25 NPTF	**XVL**		**XVL/S**	
Inch	.375 NPTF	**XVM**		**XVM/S**	
Inch	SAE-6	**XVN**		**XVN/S**	
Inch	SAE-8	**XVO**		**XVO/S**	
Metric	.25 BSPP	**XVP**		**XVP/S**	
Metric	.375 BSPP	**XVQ**		**XVQ/S**	

LINE MOUNT BODIES

- Aluminium rated to 210 bar and SG Iron rated to 350 bar.

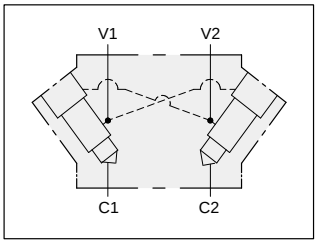

Two cavity inline cross–piloted body for load control applications.

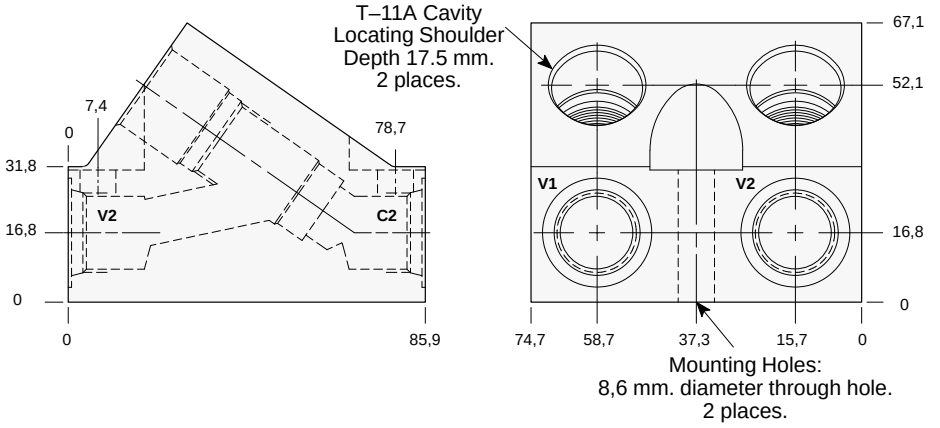

TYPICAL CARTRIDGES USED WITH THIS BODY

CBCA - *** Page 4.10
CBCG - *** Page 4.12
CBCH - *** Page 4.14
CKCB - *** Page 4.16

Instructions for ordering complete cartridge and body assemblies. Page viii

Pressure ratings, material specifications. Page 11.02

Ports C1, C2, & V1, V2	ALUMINIUM		SG IRON	
	Model Code	*List Price*	*Model Code*	*List Price*
.25 NPTF	**XEA**		**XEA/S**	
.375 NPTF	**XEB**		**XEB/S**	
SAE-6	**XEI**		**XEI/S**	
SAE-8	**XEJ**		**XEJ/S**	
.25 BSPP	**XET**		**XET/S**	
.375 BSPP	**XEU**		**XEU/S**	
.50 BSPP	**XEV**		**XEV/S**	

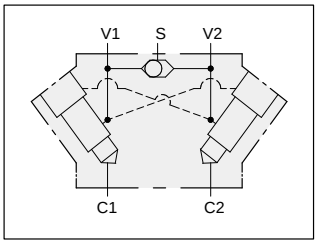

Two cavity inline cross–piloted body with shuttle for load control applications.

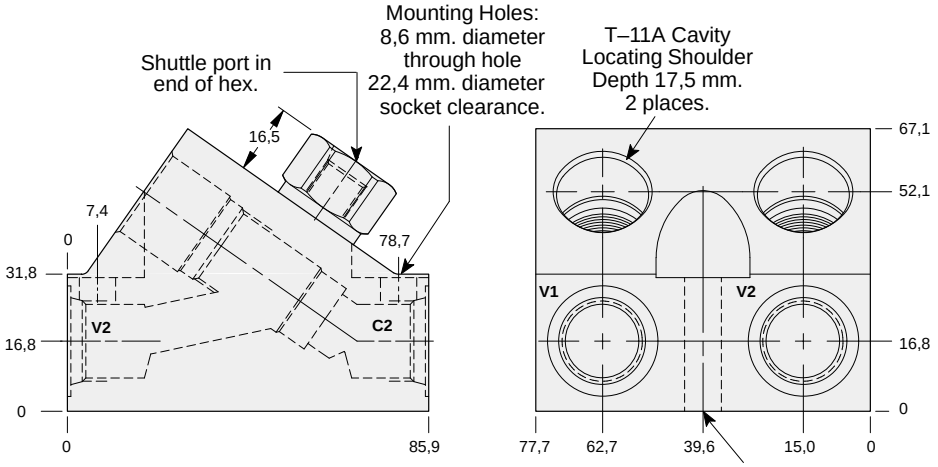

TYPICAL CARTRIDGES USED WITH THIS BODY

CBCA - *** Page 4.10
CBCG - *** Page 4.12
CBCH - *** Page 4.14
CKCB - *** Page 4.16

Instructions for ordering complete cartridge and body assemblies. Page viii

Pressure ratings, material specifications. Page 11.02

Ports C1, C2, & V1, V2	*Shuttle Cartridge*	*Shuttle Port*	ALUMINIUM		SG IRON	
			Model Code	*List Price*	*Model Code*	*List Price*
.25 NPTF	CSAA – EXN	SAE-4	**XGA**		**XGA/S**	
.375 NPTF	CSAA – EXN	SAE-4	**XGB**		**XGB/S**	
SAE-6	CSAA – EXN	SAE-4	**XGI**		**XGI/S**	
SAE-8	CSAA – EXN	SAE-4	**XGJ**		**XGJ/S**	
.25 BSPP	CSAA – BXN	.25 BSPP	**XGT**		**XGT/S**	
.375 BSPP	CSAA – BXN	.25 BSPP	**XGU**		**XGU/S**	

- Aluminium rated to 210 bar and SG Iron rated to 350 bar.

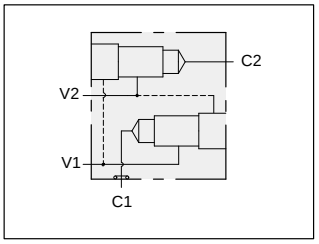

Two cavity gasket mount body for load control applications.

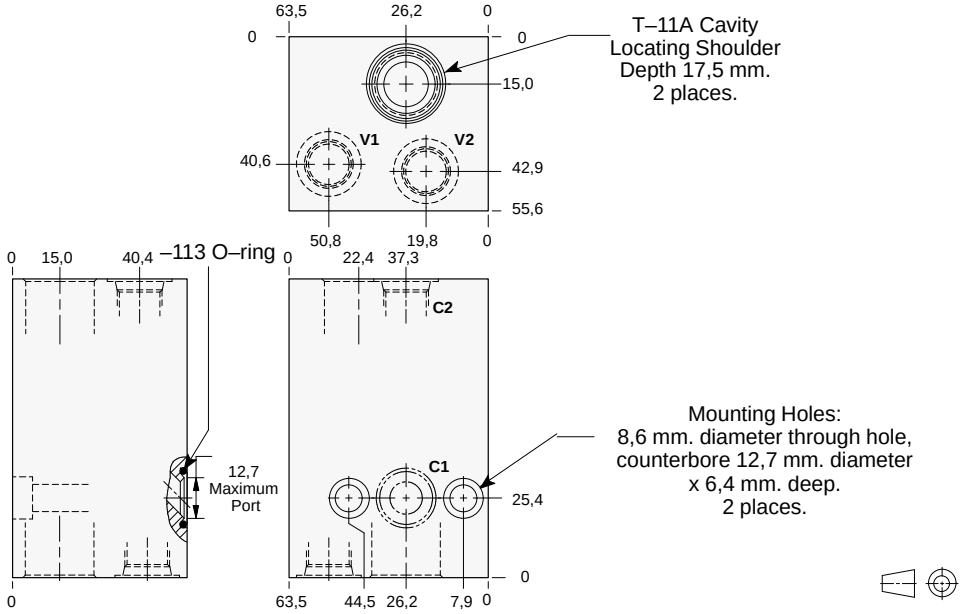

TYPICAL CARTRIDGES USED WITH THIS BODY

CBCA - *** Page 4.10
CBCG - *** Page 4.12
CBCH - *** Page 4.14
CKCB - *** Page 4.16

Cartridge seal type determines O–ring type.

Instructions for ordering complete cartridge and body assemblies. Page viii

Pressure ratings, material specifications. Page 11.02

Ports C1, C2, & V1, V2	ALUMINIUM		SG IRON	
	Model Code	*List Price*	*Model Code*	*List Price*
.375 NPTF	**YVM**		**YVM/S**	
SAE-6	**YVY**		**YVY/S**	
.375 BSPP	**YVX**		**YVX/S**	

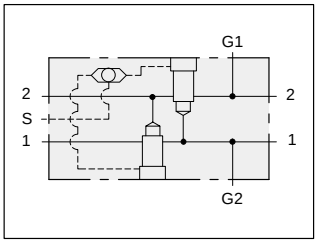

Two cavity through port body with shuttle and gauge ports.

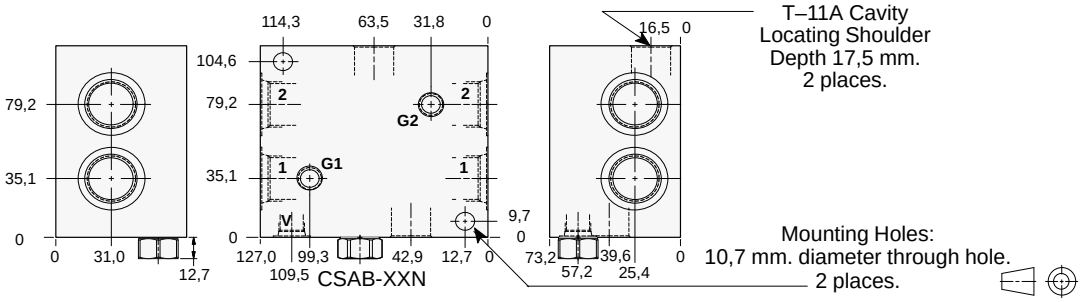

TYPICAL CARTRIDGES USED WITH THIS BODY

RVCA - *** Page 1.18

Cartridge seal type determines O–ring type.

Instructions for ordering complete cartridge and body assemblies. Page viii

Pressure ratings, material specifications. Page 11.02

Ports 1 & 2	*Port V*	*Ports G1 & G2*	ALUMINIUM		SG IRON	
			Model Code	*List Price*	*Model Code*	*List Price*
.25 NPTF	.25 NPTF	.25 NPTF	**XOA**		**XOA/S**	
.375 NPTF	.25 NPTF	.25 NPTF	**XOB**		**XOB/S**	
.50 NPTF	.25 NPTF	.25 NPTF	**XOC**		**XOC/S**	
.75 NPTF	.25 NPTF	.25 NPTF	**XOD**		**XOD/S**	
SAE-6	SAE-6	.25 NPTF	**XOI**		**XOI/S**	
SAE-8	SAE-6	.25 NPTF	**XOJ**		**XOJ/S**	
SAE-10	SAE-6	.25 NPTF	**XOK**		**XOK/S**	
SAE-12	SAE-6	.25 NPTF	**XOL**		**XOL/S**	
.25 BSPP	.25 BSPP	.25 BSPP	**XOT**		**XOT/S**	
.375 BSPP	.25 BSPP	.25 BSPP	**XOU**		**XOU/S**	
.50 BSPP	.25 BSPP	.25 BSPP	**XOV**		**XOV/S**	
.75 BSPP	.25 BSPP	.25 BSPP	**XOW**		**XOW/S**	

LINE MOUNT BODIES

- Aluminium rated to 210 bar and SG Iron rated to 350 bar.

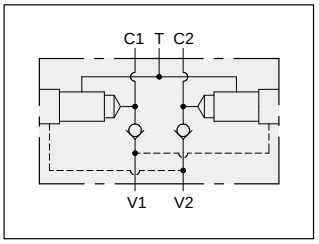

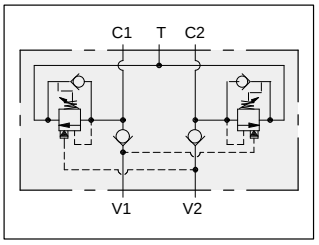

Two cavity dual load control body with checks.

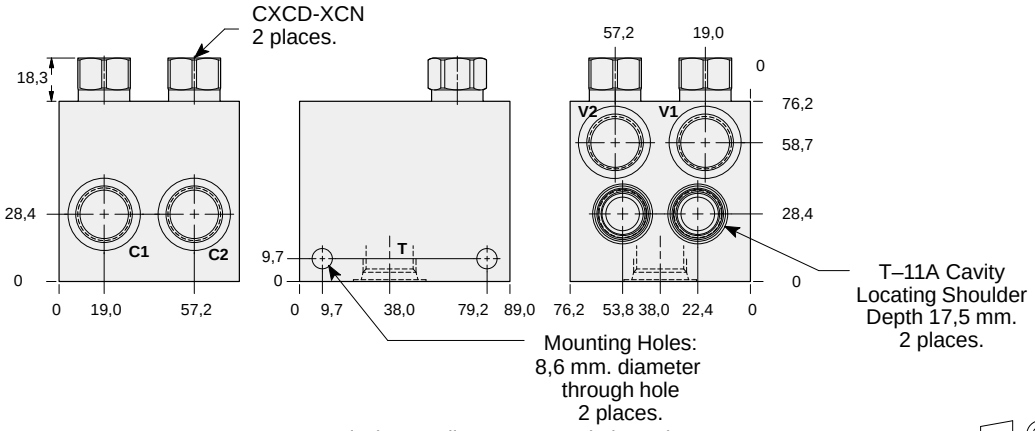

Discharge oil returns to tank through port T.

Ports C1, C2, & V1, V2	*Port T*	ALUMINIUM		SG IRON	
		Model Code	*List Price*	*Model Code*	*List Price*
.375 NPTF	.50 NPTF	**EMB**		**EMB/S**	
.50 NPTF	.50 NPTF	**EMC**		**EMC/S**	
SAE-8	SAE-10	**EMJ**		**EMJ/S**	
SAE-10	SAE-10	**EMK**		**EMK/S**	
.375 BSPP	.50 BSPP	**EMU**		**EMU/S**	
.50 BSPP	.50 BSPP	**EMV**		**EMV/S**	

TYPICAL CARTRIDGES USED WITH THIS BODY

CBCA - *** Page 4.10
CBCG - *** Page 4.12
CBCH - *** Page 4.14

Cartridge seal type determines check valve seal type.

Instructions for ordering complete cartridge and body assemblies. Page iii

Pressure ratings, material specifications. Page 11.02

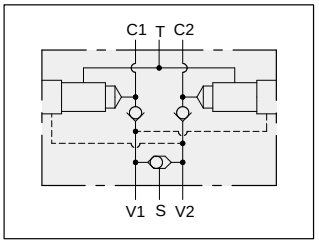

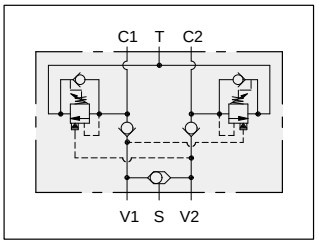

Two cavity dual load control body with checks and shuttle.

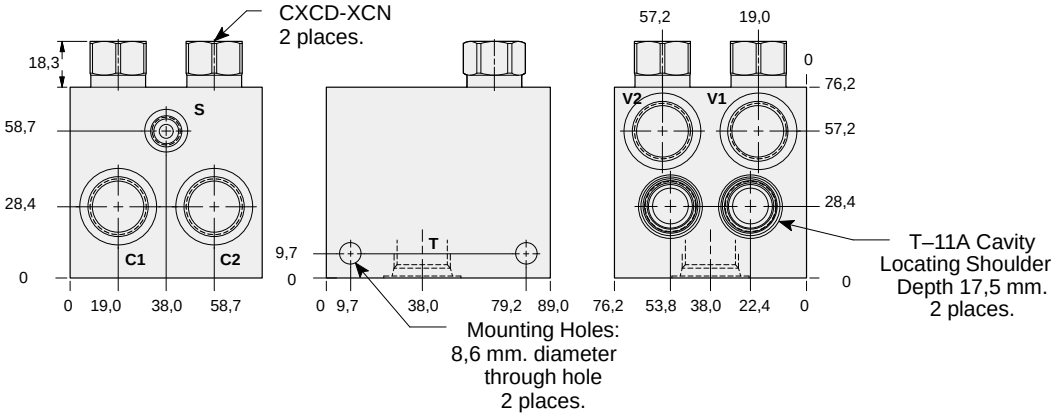

Discharge oil returns to tank through port T.

Ports C1, C2, & V1, V2	*Port S*	*Port T*	ALUMINIUM		SG IRON	
			Model Code	*List Price*	*Model Code*	*List Price*
.375 NPTF	.25 NPTF	.50 NPTF	**ENB**		**ENB/S**	
.50 NPTF	.25 NPTF	.50 NPTF	**ENC**		**ENC/S**	
SAE-8	SAE-4	SAE-10	**ENJ**		**ENJ/S**	
SAE-10	SAE-4	SAE-10	**ENK**		**ENK/S**	
.375 BSPP	.25 BSPP	.50 BSPP	**ENU**		**ENU/S**	
.50 BSPP	.25 BSPP	.50 BSPP	**ENV**		**ENV/S**	

TYPICAL CARTRIDGES USED WITH THIS BODY

CBCA - *** Page 4.10
CBCG - *** Page 4.12
CBCH - *** Page 4.14

Cartridge seal type determines check valve seal type.

Instructions for ordering complete cartridge and body assemblies. Page viii

Pressure ratings, material specifications. Page 11.02

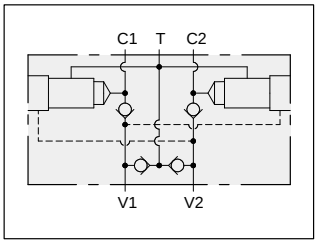

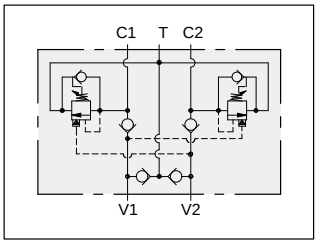

Two cavity dual load control body with make-up checks.

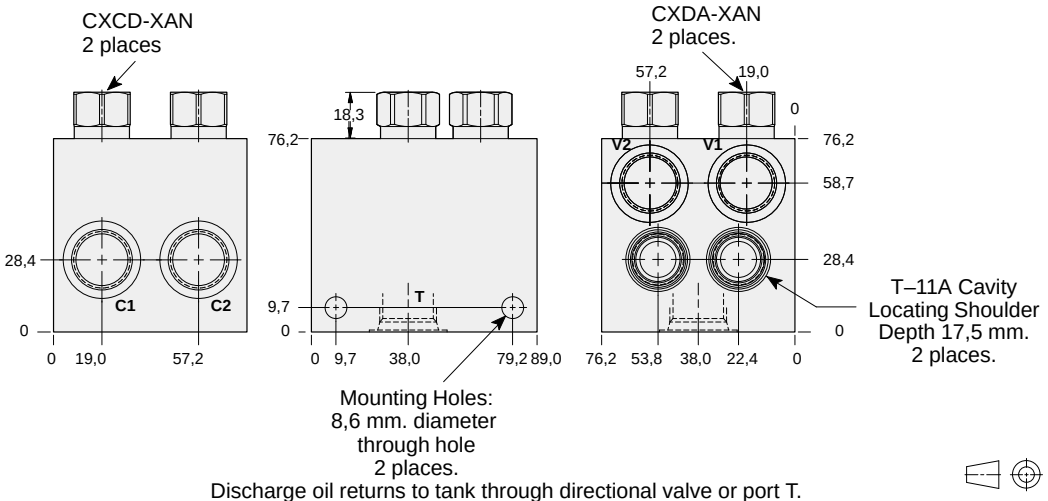

Discharge oil returns to tank through directional valve or port T.

TYPICAL CARTRIDGES USED WITH THIS BODY

CBCA - *** Page 4.10
CBCG - *** Page 4.12
CBCH - *** Page 4.14

Cartridge seal type determines check valve seal type.

Instructions for ordering complete cartridge and body assemblies. Page viii

Pressure ratings, material specifications. Page 11.02

Ports C1, C2, & V1, V2	*Port T*	ALUMINIUM		SG IRON	
		Model Code	*List Price*	*Model Code*	*List Price*
.375 NPTF	.50 NPTF	**EPB**		**EPB/S**	
.50 NPTF	.50 NPTF	**EPC**		**EPC/S**	
SAE-8	SAE-10	**EPJ**		**EPJ/S**	
SAE-10	SAE-10	**EPK**		**EPK/S**	
.375 BSPP	.50 BSPP	**EPU**		**EPU/S**	
.50 BSPP	.50 BSPP	**EPV**		**EPV/S**	

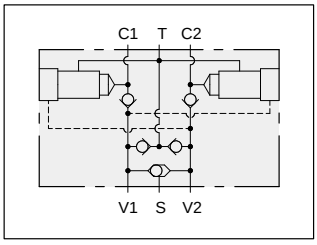

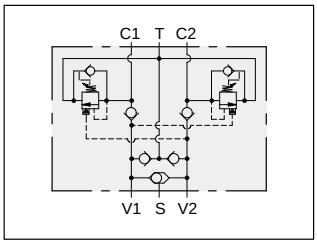

Two cavity dual load control body with make-up checks and shuttle.

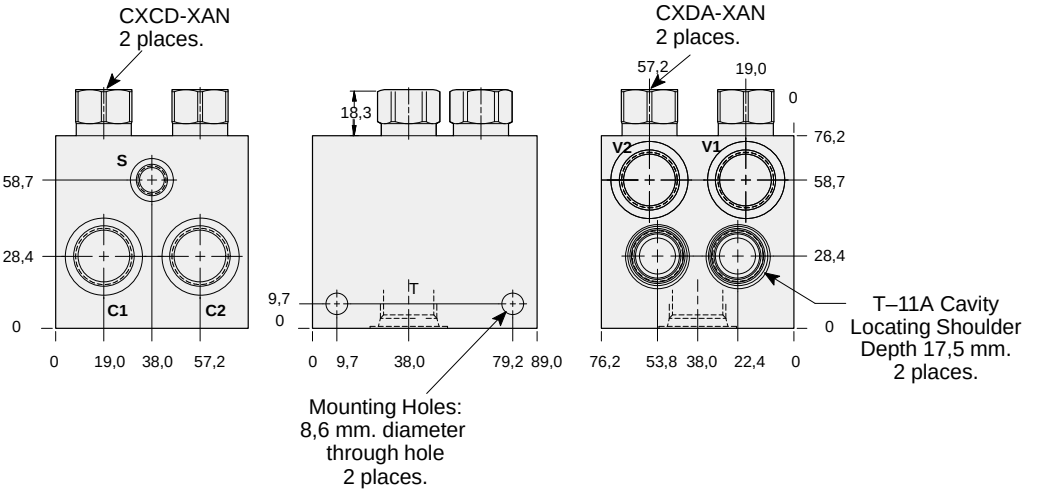

Discharge oil returns to tank through directional valve or port T.

TYPICAL CARTRIDGES USED WITH THIS BODY

CBCA - *** Page 4.10
CBCG - *** Page 4.12
CBCH - *** Page 4.14

Cartridge seal type determines check valve seal type.

Instructions for ordering complete cartridge and body assemblies. Page viii

Pressure ratings, material specifications. Page 11.02

Ports C1, C2, & V1, V2	*Port S*	*Port T*	ALUMINIUM		SG IRON	
			Model Code	*List Price*	*Model Code*	*List Price*
.375 NPTF	.25 NPTF	.50 NPTF	**EQB**		**EQB/S**	
.50 NPTF	.25 NPTF	.50 NPTF	**EQC**		**EQC/S**	
SAE-8	SAE-4	SAE-10	**EQJ**		**EQJ/S**	
SAE-10	SAE-4	SAE-10	**EQK**		**EQK/S**	
.375 BSPP	.25 BSPP	.50 BSPP	**EQU**		**EQU/S**	
.50 BSPP	.25 BSPP	.50 BSPP	**EQV**		**EQV/S**	

LINE MOUNT BODIES

- Aluminium rated to 210 bar and SG Iron rated to 350 bar.

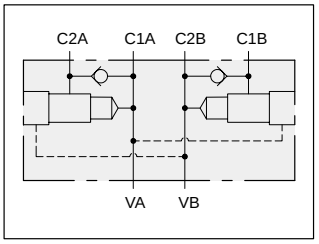

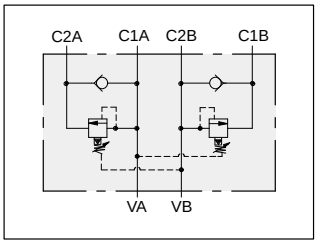

Two cavity dual sequence body with reverse free flow checks.

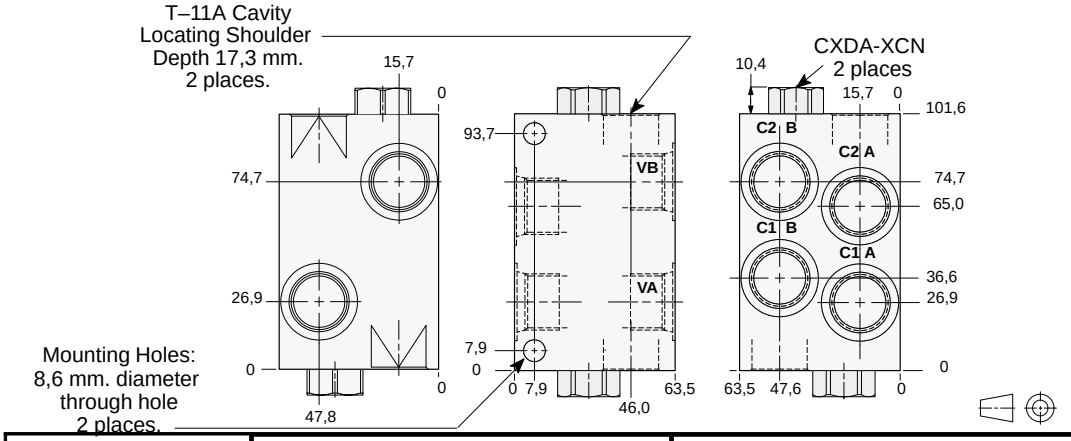

All Ports	ALUMINIUM		SG IRON	
	Model Code	*List Price*	*Model Code*	*List Price*
.25 NPTF	**E8A**		**E8A/S**	
.375 NPTF	**E8B**		**E8B/S**	
.50 NPTF	**E8C**		**E8C/S**	
SAE-6	**E8I**		**E8I/S**	
SAE-8	**E8J**		**E8J/S**	
SAE-10	**E8K**		**E8K/S**	
.25 BSPP	**E8T**		**E8T/S**	
.375 BSPP	**E8U**		**E8U/S**	
.50 BSPP	**E8V**		**E8V/S**	

TYPICAL CARTRIDGES USED WITH THIS BODY

RSDC - *** Page 2.06
SQDB - *** Page 2.08

Cartridge seal type determines check valve seal type.

Instructions for ordering complete cartridge and body assemblies. Page viii

Pressure ratings, material specifications. Page 11.02

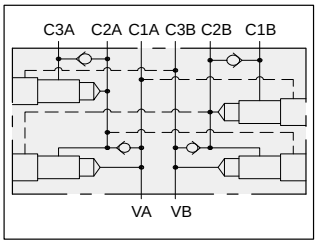

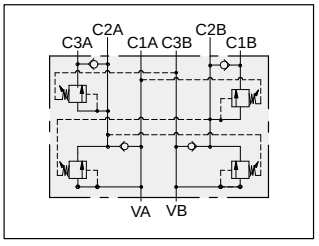

Four cavity triple sequence body with reverse free flow checks.

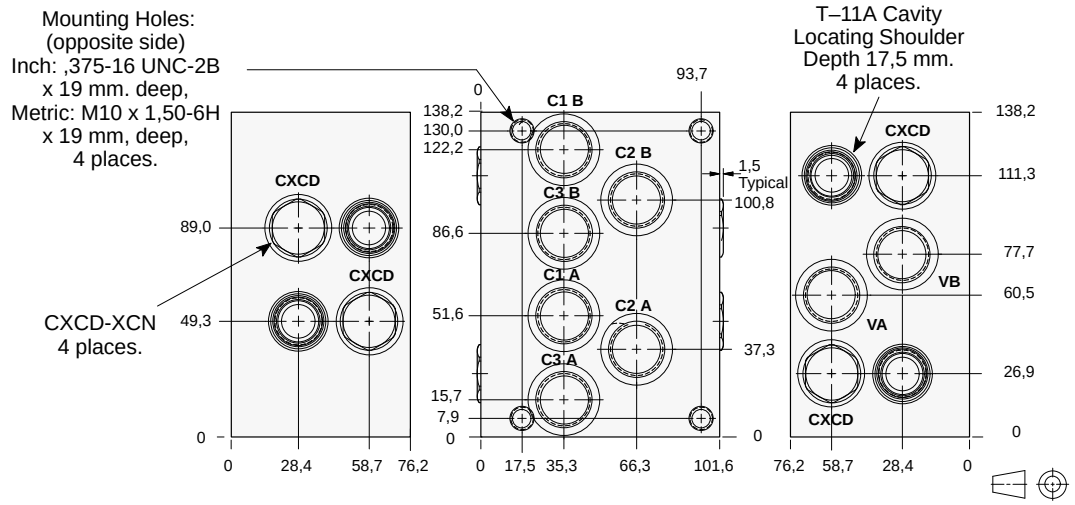

Mounting Hole Dimensions	*All Ports*	ALUMINIUM		SG IRON	
		Model Code	*List Price*	*Model Code*	*List Price*
Inch	.375 NPTF	**E9B**		**E9B/S**	
Inch	.50 NPTF	**E9C**		**E9C/S**	
Inch	SAE-8	**E9J**		**E9J/S**	
Inch	SAE-10	**E9K**		**E9K/S**	
Metric	.375 BSPP	**E9U**		**E9U/S**	
Metric	.50 BSPP	**E9V**		**E9V/S**	

TYPICAL CARTRIDGES USED WITH THIS BODY

RSDC - *** Page 2.06
SQDB - *** Page 2.08

Cartridge seal type determines check valve seal type.

Instructions for ordering complete cartridge and body assemblies. Page viii

Pressure ratings, material specifications. Page 11.02

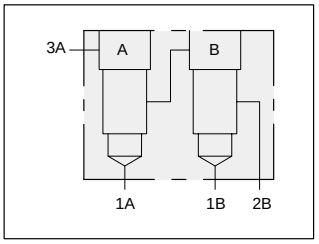

TYPICAL CARTRIDGES USED WITH THIS BODY

CSAB - *** Page 10.08
CDAB - *** Page 10.10

Instructions for ordering complete cartridge and body assemblies. Page viii

Pressure ratings, material specifications. Page 11.02

Two cavity load–sensing body with three signal input.

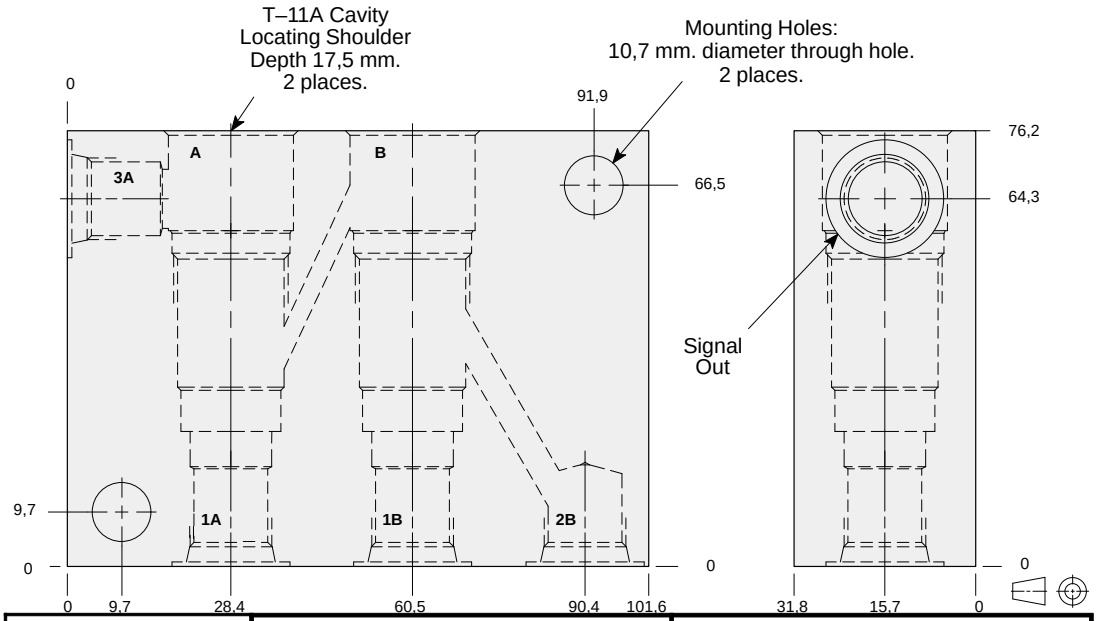

All Ports	ALUMINIUM		SG IRON	
	Model Code	List Price	Model Code	List Price
.25 NPTF	**XVV**		**XVV/X**	
SAE-6	**XVW**		**XVW/S**	
.25 BSPP	**XVX**		**XVX/S**	

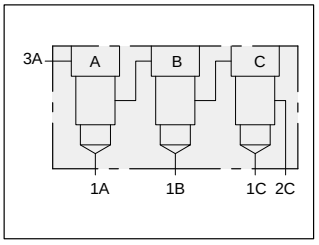

TYPICAL CARTRIDGES USED WITH THIS BODY

CSAB - *** Page 10.08
CDAB - *** Page 10.10

Instructions for ordering complete cartridge and body assemblies. Page viii

Pressure ratings, material specifications. Page 11.02

Three cavity load–sensing body with four signal input.

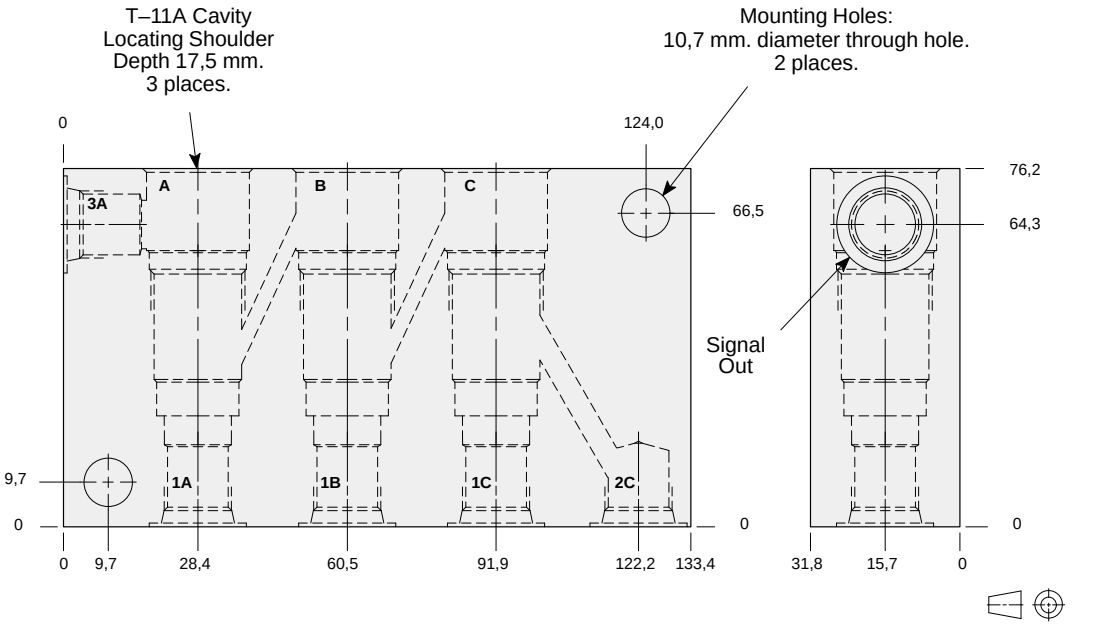

All Ports	ALUMINIUM		SG IRON	
	Model Code	List Price	Model Code	List Price
.25 NPTF	**XVR**		**XVR/S**	
SAE-6	**XVS**		**XVS/S**	
.25 BSPP	**XVT**		**XVT/S**	

LINE MOUNT BODIES

- Aluminium rated to 210 bar and SG Iron rated to 350 bar.

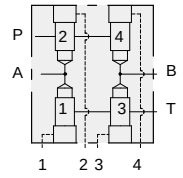

Four cavity four–way logic body for directional applications.

Mounting Holes:
Inch: .375-16 UNC-2B
x 15,7 mm. deep.
Metric: M10 x 1.50-6H
x 15,7 mm. deep.
2 places.

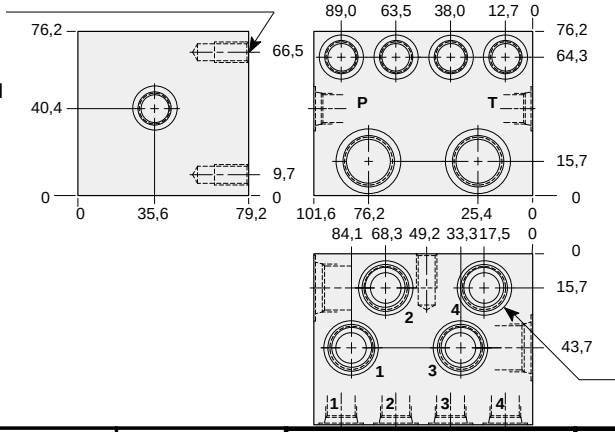

T–11A Cavity
Locating Shoulder
Depth 17,5 mm.
4 places.

TYPICAL CARTRIDGES USED WITH THIS BODY

LODC - *** Page 9.08
LKDC - *** Page 9.10
LPDC - *** Page 9.12
LRDC - *** Page 9.14

Instructions for ordering complete cartridge and body assemblies. Page viii

Pressure ratings, material specifications. Page 11.02

Mounting Hole Dimensions	*Ports 1 & 2, 3 & 4*	*Ports A & B P & T*	ALUMINIUM		SG IRON	
			Model Code	*List Price*	*Model Code*	*List Price*
Inch	.25 NPTF	.25 NPTF	**YRZ**		**YRZ/S**	
Inch	.25 NPTF	.375 NPTF	**YRY**		**YRY/S**	
Inch	.25 NPTF	.50 NPTF	**YRX**		**YRX/S**	
Inch	SAE-6	SAE-6	**YRW**		**YRW/S**	
Inch	SAE-6	SAE-8	**YRV**		**YRV/S**	
Inch	SAE-6	SAE-10	**YRT**		**YRT/S**	
Metric	.25 BSPP	.25 BSPP	**YRP**		**YRP/S**	
Metric	.25 BSPP	.375 BSPP	**YRM**		**YRM/S**	
Metric	.25 BSPP	.50 BSPP	**YRQ**		**YRQ/S**	

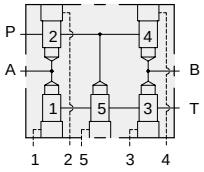

Five cavity four–way logic body for directional applications.

Mounting Holes:
Inch: .375-16 UNC-2B
x 15,7 mm. deep.
Metric: M10 x 1.50-6H
x 15,7 mm. deep.
2 places.

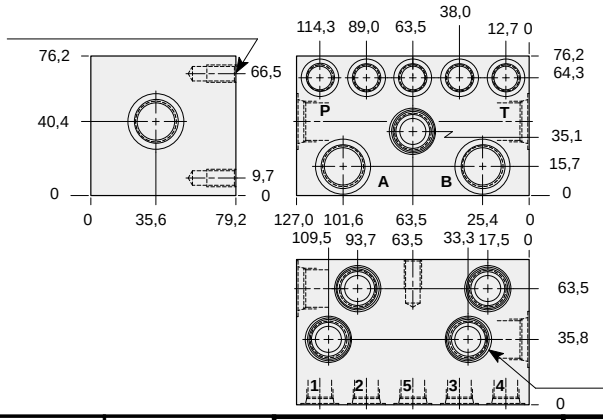

T–11A Cavity
Locating Shoulder
Depth 17,5 mm.
5 places.

TYPICAL CARTRIDGES USED WITH THIS BODY

LODC - *** Page 9.08
LKDC - *** Page 9.10
LPDC - *** Page 9.12
LRDC - *** Page 9.14

Instructions for ordering complete cartridge and body assemblies. Page viii

Pressure ratings, material specifications. Page 11.02

Mounting Hole Dimensions	*Ports 1,2, 3,4 & 5*	*Ports A & B P & T*	ALUMINIUM		SG IRON	
			Model Code	*List Price*	*Model Code*	*List Price*
Inch	.25 NPTF	.25 NPTF	**YQZ**		**YQZ/S**	
Inch	.25 NPTF	.375 NPTF	**YQY**		**YQY/S**	
Inch	.25 NPTF	.50 NPTF	**YQX**		**YQX/S**	
Inch	SAE-6	SAE-6	**YQW**		**YQW/S**	
Inch	SAE-6	SAE-8	**YQV**		**YQV/S**	
Inch	SAE-6	SAE-10	**YQT**		**YQT/S**	
Metric	.25 BSPP	.25 BSPP	**YQP**		**YQP/S**	
Metric	.25 BSPP	.375 BSPP	**YQM**		**YQM/S**	
Metric	.25 BSPP	.50 BSPP	**YQQ**		**YQQ/S**	

- Aluminium rated to 210 bar and SG Iron rated to 350 bar.

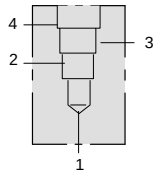

90 degree body.

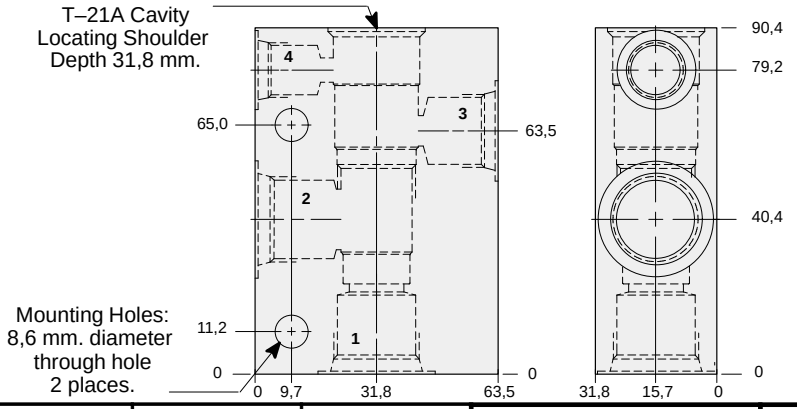

Ports 1 & 2	*Port 3*	*Port 4*	ALUMINIUM		SG IRON	
			Model Code	*List Price*	*Model Code*	*List Price*
.25 NPTF	.25 NPTF	.25 NPTF	**MAA**		**MAA/S**	
.375 NPTF	.375 NPTF	.25 NPTF	**MAB**		**MAB/S**	
.50 NPTF	.375 NPTF	.25 NPTF	**MAC**		**MAC/S**	
SAE-6	SAE-6	SAE-6	**MAI**		**MAI/S**	
SAE-8	SAE-8	SAE-6	**MAJ**		**MAJ/S**	
SAE-10	SAE-8	SAE-6	**MAK**		**MAK/S**	
.25 BSPP	.25 BSPP	.25 BSPP	**MAT**		**MAT/S**	
.375 BSPP	.375 BSPP	.25 BSPP	**MAU**		**MAU/S**	
.50 BSPP	.375 BSPP	.25 BSPP	**MAV**		**MAV/S**	

TYPICAL CARTRIDGES USED WITH THIS BODY

RVCD - *** Page 1.20
PVDA - *** Page 3.14
PVDB - *** Page 3.16
CWCA - *** Page 4.18
CWCG - *** Page 4.20
CVCV - *** Page 4.22
FVCA - *** Page 6.04
DPBM - *** Page 8.10
DPBN - *** Page 8.11
DPBO - *** Page 8.12
DPBP - *** Page 8.13

Instructions for ordering complete cartridge and body assemblies. Page viii

Pressure ratings, material specifications. Page 11.02

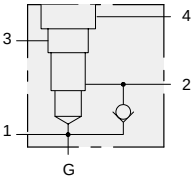

Body with reverse free flow check and gauge port for reducing/relieving applications.

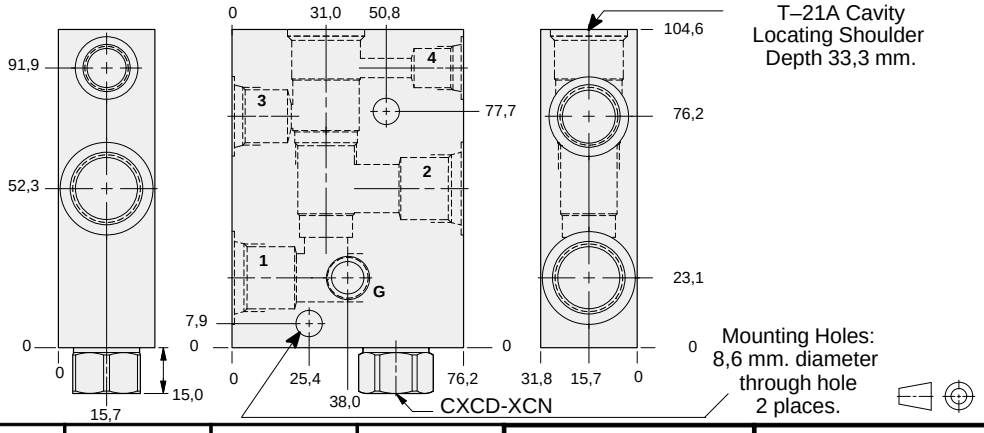

Ports 1 & 2	*Port 3*	*Port 4*	*Gauge Port*	ALUMINIUM		SG IRON	
				Model Code	*List Price*	*Model Code*	*List Price*
.25 NPTF	.25 NPTF	.25 NPTF	.25 NPTF	**M4A**		**M4A/S**	
.375 NPTF	.375 NPTF	.375 NPTF	.25 NPTF	**M4B**		**M4B/S**	
.50 NPTF	.50 NPTF	.50 NPTF	.25 NPTF	**M4C**		**M4C/S**	
SAE-6	SAE-6	SAE-6	.25 NPTF	**M4I**		**M4I/S**	
SAE-8	SAE-8	SAE-6	.25 NPTF	**M4J**		**M4J/S**	
SAE-10	SAE-8	SAE-6	.25 NPTF	**M4K**		**M4K/S**	
.25 BSPP	.25 BSPP	.25 BSPP	.25 BSPP	**M4T**		**M4T/S**	
.375 BSPP	.375 BSPP	.25 BSPP	.25 BSPP	**M4U**		**M4U/S**	
.50 BSPP	.375 BSPP	.25 BSPP	.25 BSPP	**M4V**		**M4V/S**	

TYPICAL CARTRIDGES USED WITH THIS BODY

PVDA - *** Page 3.14
PVDB - *** Page 3.16

Cartridge seal type determines check valve seal type.

Instructions for ordering complete cartridge and body assemblies. Page viii

Pressure ratings, material specifications. Page 11.02

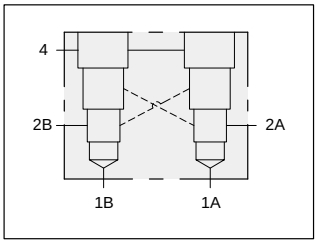

Two cavity 90 degree cross–piloted body with common port 4 for load control applications.

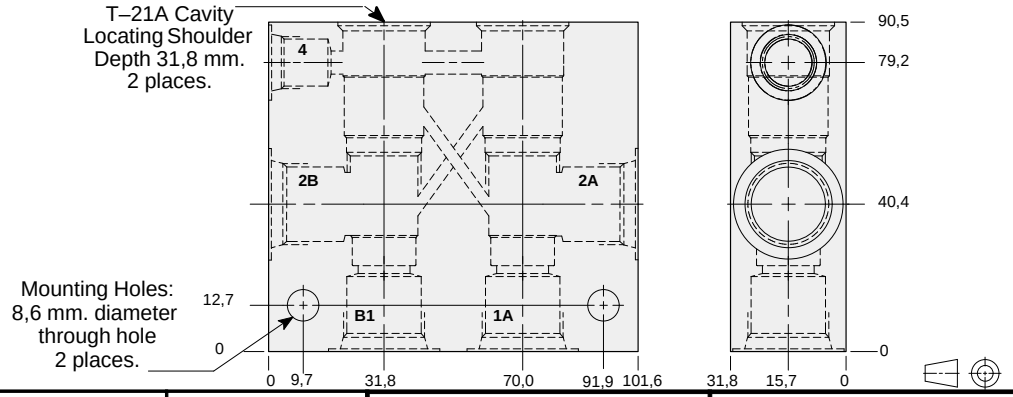

TYPICAL CARTRIDGES USED WITH THIS BODY

CWCA - *** Page 4.18
CWCG - *** Page 4.20
CVCV - *** Page 4.22

Instructions for ordering complete cartridge and body assemblies. Page iii

Pressure ratings, material specifications. Page 11.02

Main Ports 1A,1B & 2A,2B	*Port 4*	ALUMINIUM		SG IRON	
		Model Code	*List Price*	*Model Code*	*List Price*
.25 NPTF	.25 NPTF	**XPA**		**XPA/S**	
.375 NPTF	.25 NPTF	**XPB**		**XPB/S**	
.50 NPTF	.25 NPTF	**XPC**		**XPC/S**	
SAE-6	SAE-6	**XPI**		**XPI/S**	
SAE-8	SAE-6	**XPJ**		**XPJ/S**	
SAE-10	SAE-6	**XPK**		**XPK/S**	
.25 BSPP	.25 BSPP	**XPT**		**XPT/S**	
.375 BSPP	.25 BSPP	**XPU**		**XPU/S**	
.50 BSPP	.25 BSPP	**XPV**		**XPV/S**	

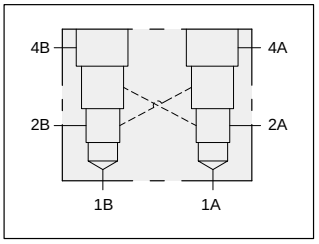

Two cavity 90 degree cross–piloted body with independent port 4 for load control applications.

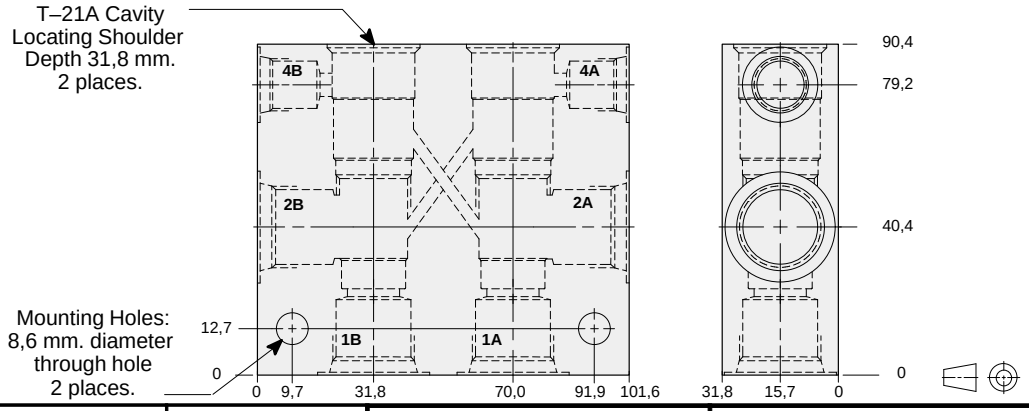

TYPICAL CARTRIDGES USED WITH THIS BODY

CWCA - *** Page 4.18
CWCG - *** Page 4.20
CVCV - *** Page 4.22

Instructions for ordering complete cartridge and body assemblies. Page iii

Pressure ratings, material specifications. Page 11.02

Main Ports 1A,1B & 2A,2B	*Ports 4A & 4B*	ALUMINIUM		SG IRON	
		Model Code	*List Price*	*Model Code*	*List Price*
.25 NPTF	.25 NPTF	**XFA**		**XFA/S**	
.375 NPTF	.25 NPTF	**XFB**		**XFB/S**	
.50 NPTF	.25 NPTF	**XFC**		**XFC/S**	
SAE-6	SAE-6	**XFI**		**XFI/S**	
SAE-8	SAE-6	**XFJ**		**XFJ/S**	
SAE-10	SAE-6	**XFK**		**XFK/S**	
.25 BSPP	.25 BSPP	**XFT**		**XFT/S**	
.375 BSPP	.25 BSPP	**XFU**		**XFU/S**	
.50 BSPP	.25 BSPP	**XFV**		**XFV/S**	

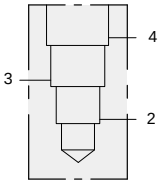

Body for flow divider/combiner applications.

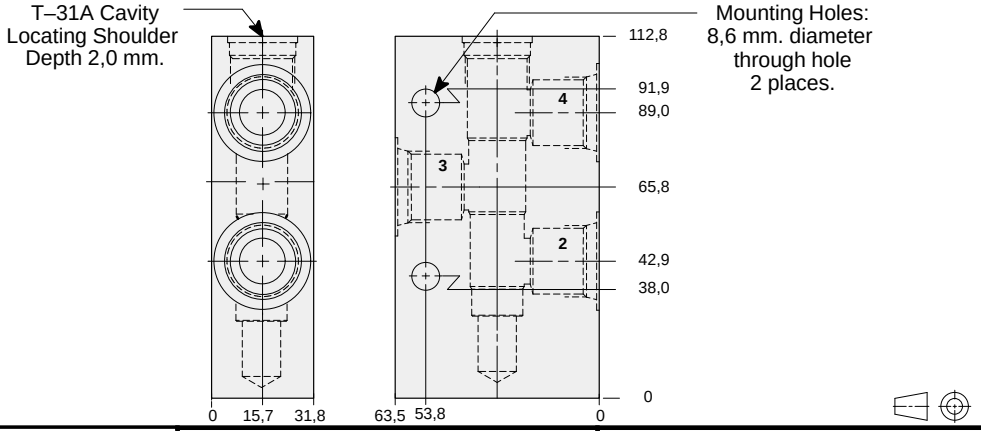

TYPICAL CARTRIDGES USED WITH THIS BODY

FSDB	- ***	Page	7.08
FSCD	- ***	Page	7.08
FSBA	- ***	Page	7.10
FSCA	- ***	Page	7.10
FSBS	- ***	Page	7.12
FSCS	- ***	Page	7.12
FSCH	- ***	Page	7.14
DSCH	- ***	Page	10.06

Instructions for ordering complete cartridge and body assemblies. Page viii

Pressure ratings, material specifications. Page 11.02

Ports 2, 3 & 4	ALUMINIUM		SG IRON	
	Model Code	*List Price*	*Model Code*	*List Price*
.25 NPTF	**MMA**		**MMA/S**	
.375 NPTF	**MMB**		**MMB/S**	
.50 NPTF	**MMC**		**MMC/S**	
SAE-6	**MMI**		**MMI/S**	
SAE-8	**MMJ**		**MMJ/S**	
SAE-10	**MMK**		**MMK/S**	
.25 BSPP	**MMT**		**MMT/S**	
.375 BSPP	**MMU**		**MMU/S**	
.50 BSPP	**MMV**		**MMV/S**	

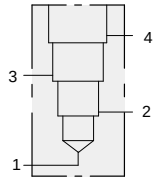

Four port body.

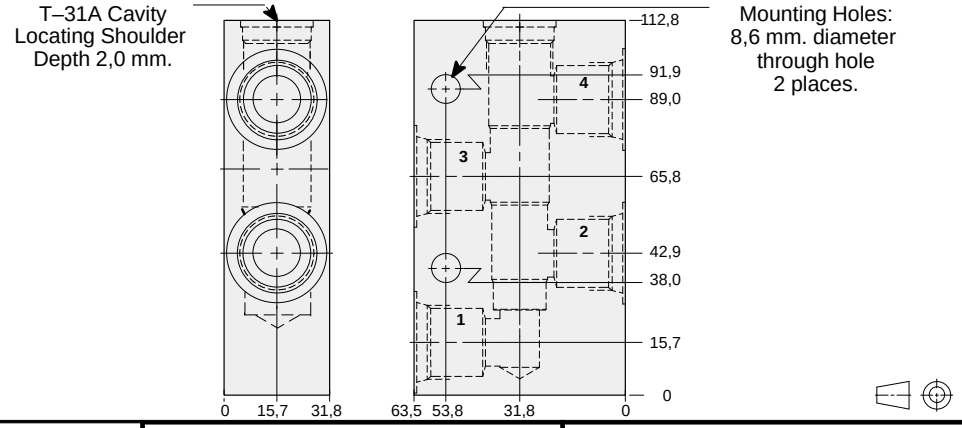

TYPICAL CARTRIDGES USED WITH THIS BODY

Instructions for ordering complete cartridge and body assemblies. Page viii

Pressure ratings, material specifications. Page 11.02

Ports 2, 3 & 4	ALUMINIUM		SG IRON	
	Model Code	*List Price*	*Model Code*	*List Price*
.25 NPTF	**MNA**		**MNA/S**	
.375 NPTF	**MNB**		**MNB/S**	
.50 NPTF	**MNC**		**MNC/S**	
SAE-6	**MNI**		**MNI/S**	
SAE-8	**MNJ**		**MNJ/S**	
SAE-10	**MNK**		**MNK/S**	
.25 BSPP	**MNT**		**MNT/S**	
.375 BSPP	**MNU**		**MNU/S**	
.50 BSPP	**MNV**		**MNV/S**	

LINE MOUNT BODIES

- Aluminium rated to 210 bar and SG Iron rated to 350 bar.

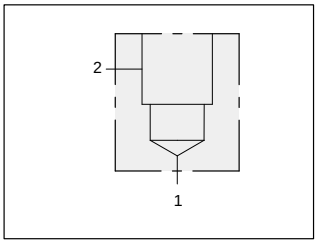

90 degree body.

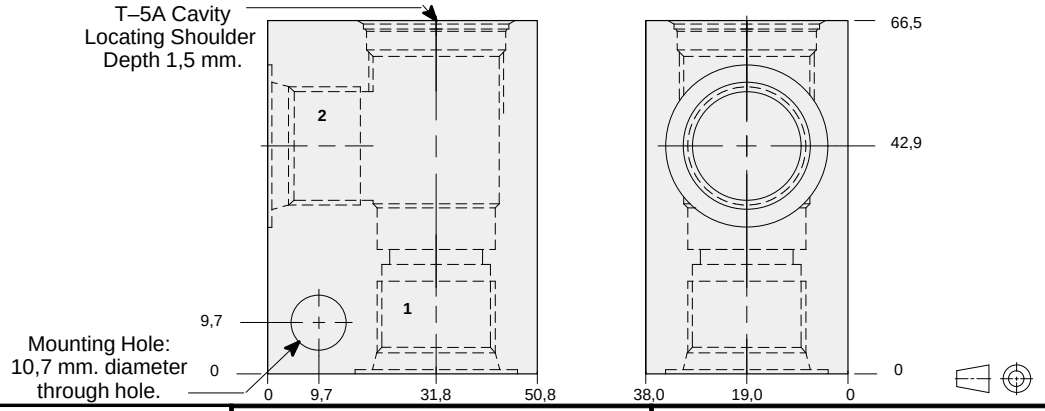

TYPICAL CARTRIDGES USED WITH THIS BODY

CXFA - *** Page 5.08
CXED - *** Page 5.10
NFDC - *** Page 5.12
CNEC - *** Page 5.14
NCEB - *** Page 5.16
NCEC - *** Page 5.18
FXDA - *** Page 5.20
FCDB - *** Page 5.22
FDCB - *** Page 5.24
FQEA - *** Page 10.14

Instructions for ordering complete cartridge and body assemblies. Page viii

Pressure ratings, material specifications. Page 11.02

Ports 1 & 2	ALUMINIUM		SG IRON	
	Model Code	*List Price*	*Model Code*	*List Price*
.25 NPTF	**DAA**		**DAA/S**	
.375 NPTF	**DAB**		**DAB/S**	
.50 NPTF	**DAC**		**DAC/S**	
SAE-6	**DAI**		**DAI/S**	
SAE-8	**DAJ**		**DAJ/S**	
SAE-10	**DAK**		**DAK/S**	
.25 BSPP	**DAT**		**DAT/S**	
.375 BSPP	**DAU**		**DAU/S**	
.50 BSPP	**DAV**		**DAV/S**	

Direct mount .75” SAE Code 61 body

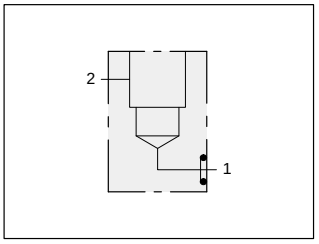

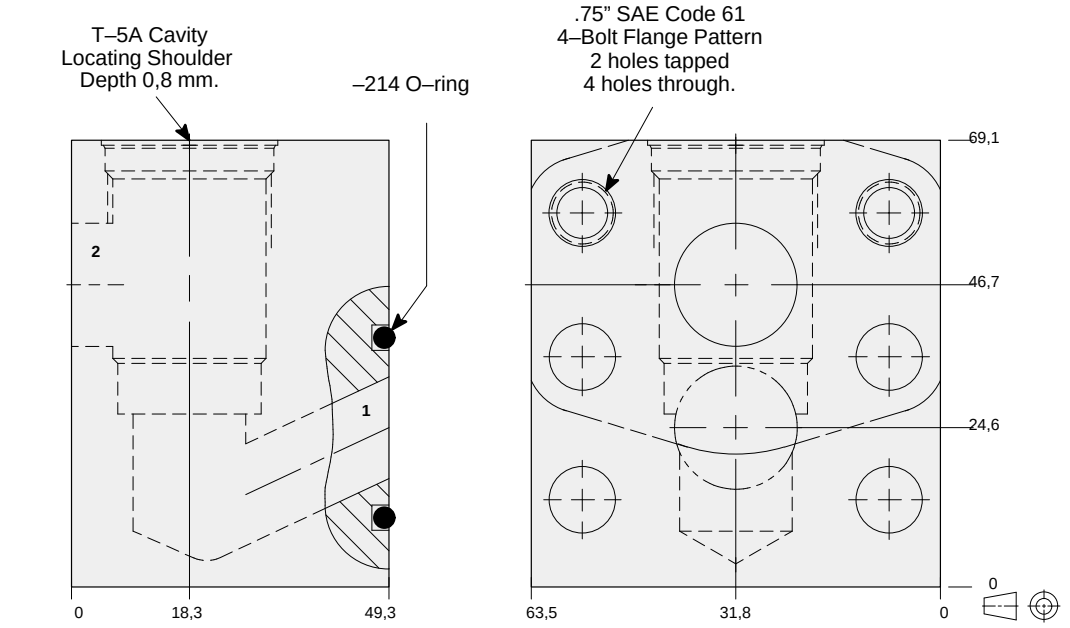

TYPICAL CARTRIDGES USED WITH THIS BODY

CXFA - *** Page 5.08
CXED - *** Page 5.10
NFDC - *** Page 5.12
CNEC - *** Page 5.14
NCEB - *** Page 5.16
NCEC - *** Page 5.18
FXDA - *** Page 5.20
FCDB - *** Page 5.22
FDCB - *** Page 5.24
FQEA - *** Page 10.14

Instructions for ordering complete cartridge and body assemblies. Page viii

Pressure ratings, material specifications. Page 11.02

Mounting Hole Dimensions	ALUMINIUM		SG IRON	
	Model Code	*List Price*	*Model Code*	*List Price*
Inch	**ZKS**		**ZKS/S**	
Metric	**ZKS/M**		**ZKS/T**	

- Aluminium rated to 210 bar and SG Iron rated to 350 bar.

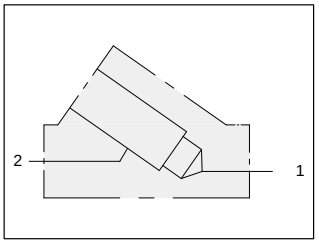

Inline body.

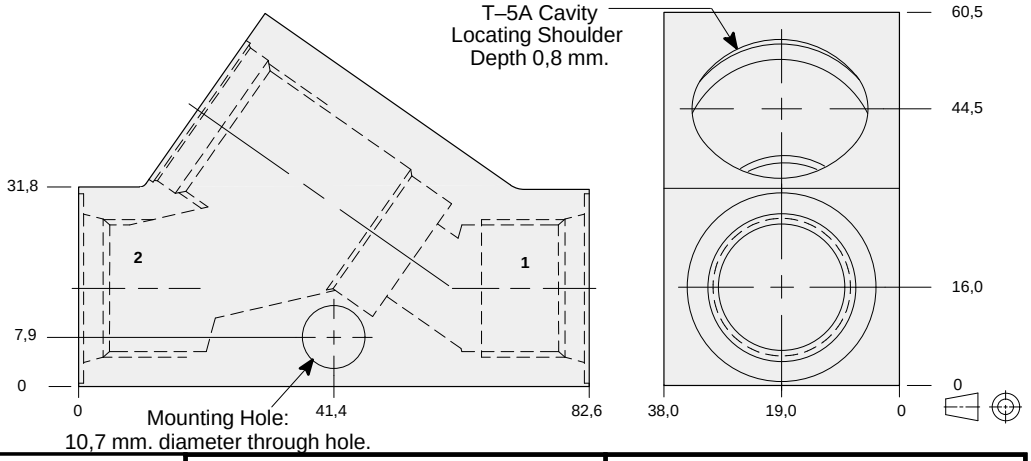

TYPICAL CARTRIDGES USED WITH THIS BODY

CXFA	- ***	Page	5.08
CXED	- ***	Page	5.10
NFDC	- ***	Page	5.12
CNEC	- ***	Page	5.14
NCEB	- ***	Page	5.16
NCEC	- ***	Page	5.18
FXDA	- ***	Page	5.20
FCDB	- ***	Page	5.22
FDCB	- ***	Page	5.24
FQEA	- ***	Page	10.14

Instructions for ordering complete cartridge and body assemblies. Page viii

Pressure ratings, material specifications. Page 11.02

Ports 1 & 2	ALUMINIUM		SG IRON	
	Model Code	*List Price*	*Model Code*	*List Price*
.375 NPTF	**DCB**		**DCB/S**	
.50 NPTF	**DCC**		**DCC/S**	
SAE-6	**DCI**		**DCI/S**	
SAE-8	**DCJ**		**DCJ/S**	
SAE-10	**DCK**		**DCK/S**	
.375 BSPP	**DCU**		**DCU/S**	
.50 BSPP	**DCV**		**DCV/S**	

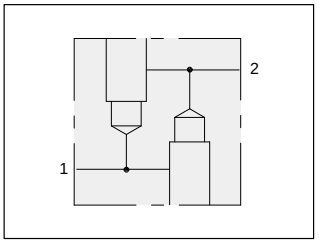

Two cavity body.

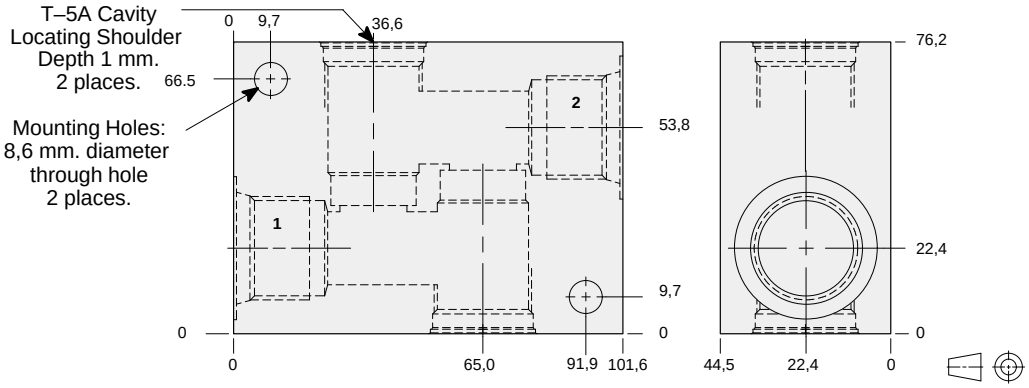

TYPICAL CARTRIDGES USED WITH THIS BODY

CXFA	- ***	Page	5.08
NFDC	- ***	Page	5.12
FXDA	- ***	Page	5.20

Instructions for ordering complete cartridge and body assemblies. Page viii

Pressure ratings, material specifications. Page 11.02

Ports 1 & 2	ALUMINIUM		SG IRON	
	Model Code	*List Price*	*Model Code*	*List Price*
.375 NPTF	**XWA**		**XWA/S**	
.50 NPTF	**XWB**		**XWB/S**	
.75 NPTF	**XWC**		**XWC/S**	
SAE-8	**XWD**		**XWD/S**	
SAE-10	**XWF**		**XWF/S**	
SAE-12	**XWG**		**XWG/S**	
.375 BSPP	**XWH**		**XWH/S**	
.50 BSPP	**XWJ**		**XWJ/S**	
.75 BSPP	**XWK**		**XWK/S**	

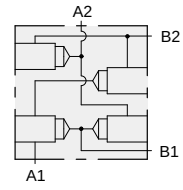

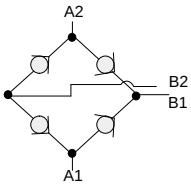

TYPICAL CARTRIDGES USED WITH THIS BODY

CXFA - *** Page 5.08

Instructions for ordering complete cartridge and body assemblies. Page viii

Pressure ratings, material specifications. Page 11.02

Rectifier body.

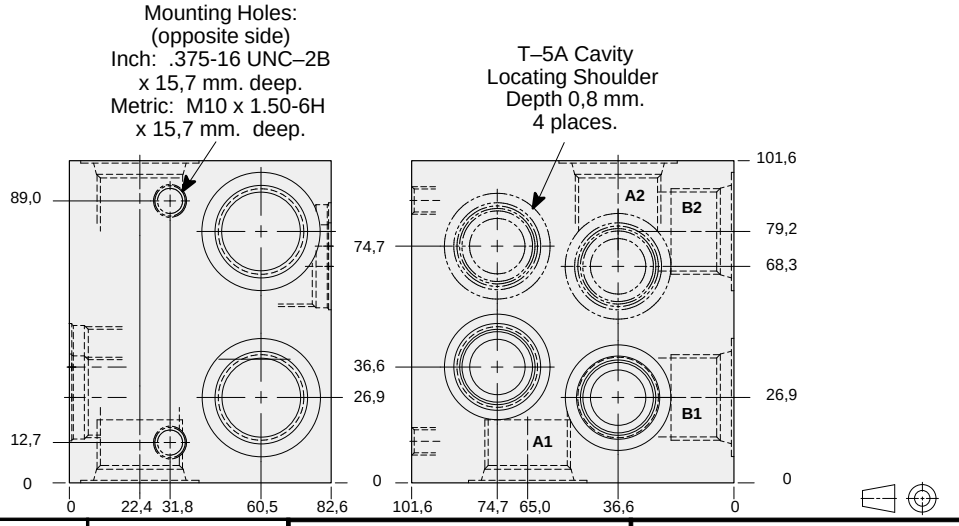

Mounting Hole Dimensions	*All Ports*	ALUMINIUM		SG IRON	
		Model Code	*List Price*	*Model Code*	*List Price*
Inch	.50 NPTF	**YSL**		**YSL/S**	
Inch	.75 NPTF	**YSM**		**YSM/S**	
Inch	SAE-10	**YSN**		**YSN/S**	
Inch	SAE-12	**YSO**		**YSO/S**	
Metric	.50 BSPP	**YSP**		**YSP/S**	
Metric	.75 BSPP	**YSQ**		**YSQ/S**	

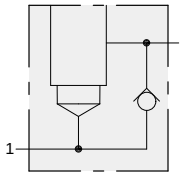

TYPICAL CARTRIDGES USED WITH THIS BODY

NFDC - *** Page 5.12

FXDA - *** Page 5.20

Cartridge seal type determines check valve seal type.

Instructions for ordering complete cartridge and body assemblies. Page viii

Pressure ratings, material specifications. Page 11.02

Body with reverse free flow check.

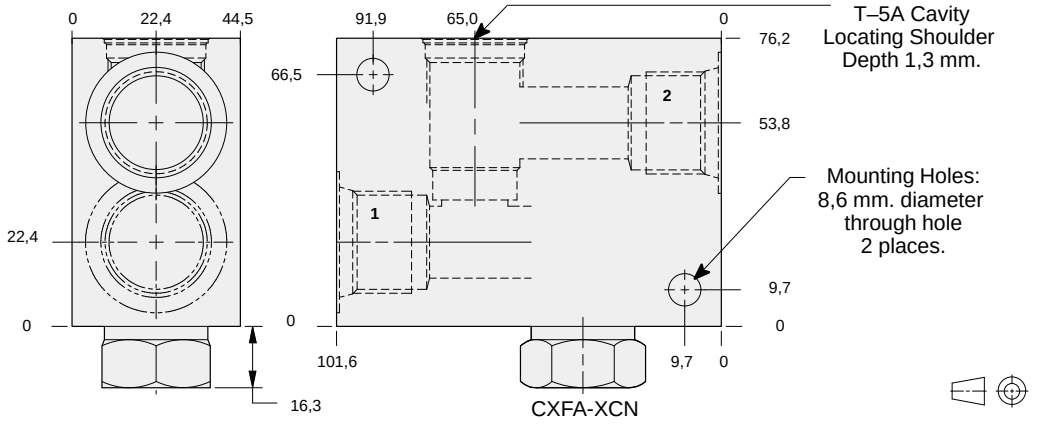

Ports 1 & 2	ALUMINIUM		SG IRON	
	Model Code	*List Price*	*Model Code*	*List Price*
.375 NPTF	**DNB**		**DNB/S**	
.50 NPTF	**DNC**		**DNC/S**	
.75 NPTF	**DND**		**DND/S**	
SAE-8	**DNJ**		**DNJ/S**	
SAE-10	**DNK**		**DNK/S**	
SAE-12	**DNL**		**DNL/S**	
.375 BSPP	**DNU**		**DNU/S**	
.50 BSPP	**DNV**		**DNV/S**	
.75 BSPP	**DNW**		**DNW/S**	

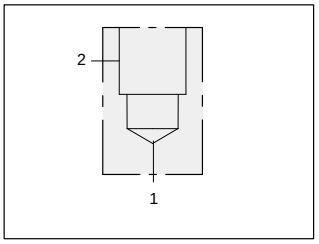

90 degree body.

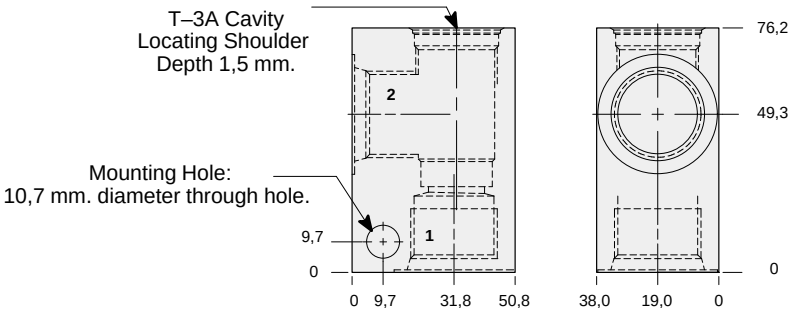

TYPICAL CARTRIDGES USED WITH THIS BODY

RPGC - *** Page 1.06
RPGE - *** Page 1.08
RDFA - *** Page 1.10
RQGB - *** Page 1.12
RPGD - *** Page 1.14
RBAA - *** Page 1.16
RBAB - *** Page 1.14
NQEB - *** Page 10.16

Instructions for ordering complete cartridge and body assemblies. Page viii

Pressure ratings, material specifications. Page 11.02

Ports 1 & 2	ALUMINIUM		SG IRON	
	Model Code	*List Price*	*Model Code*	*List Price*
.25 NPTF	**CAA**		**CAA/S**	
.375 NPTF	**CAB**		**CAB/S**	
.50 NPTF	**CAC**		**CAC/S**	
.75 NPTF	**CAD**		**CAD/S**	
SAE-4	**CAH**		**CAH/S**	
SAE-6	**CAI**		**CAI/S**	
SAE-8	**CAJ**		**CAJ/S**	
SAE-10	**CAK**		**CAK/S**	
SAE-12	**CAL**		**CAL/S**	
.25 BSPP	**CAT**		**CAT/S**	
.375 BSPP	**CAU**		**CAU/S**	
.50 BSPP	**CAV**		**CAV/S**	
.75 BSPP	**CAW**		**CAW/S**	

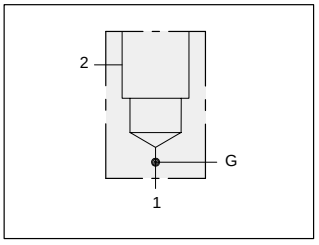

90 degree body with gauge port.

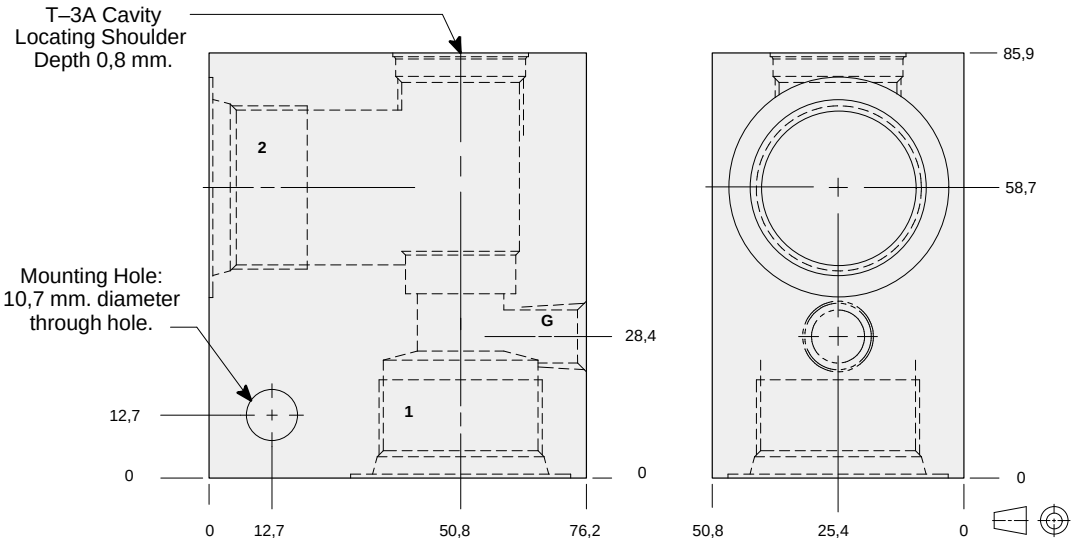

TYPICAL CARTRIDGES USED WITH THIS BODY

RPGC - *** Page 1.06
RPGE - *** Page 1.08
RDFA - *** Page 1.10
RQGB - *** Page 1.12
RPGD - *** Page 1.14
NQEB - *** Page 10.16

Instructions for ordering complete cartridge and body assemblies. Page viii

Pressure ratings, material specifications. Page 11.02

Ports 1 & 2	*Gauge Port*	ALUMINIUM		SG IRON	
		Model Code	*List Price*	*Model Code*	*List Price*
1.00 NPTF	.25 NPTF	**CAE**		**CAE/S**	
SAE-16	.25 NPTF	**CAM**		**CAM/S**	
1.00 BSPP	.25 BSPP	**CAX**		**CAX/S**	

LINE MOUNT BODIES

- Aluminium rated to 210 bar and SG Iron rated to 350 bar.

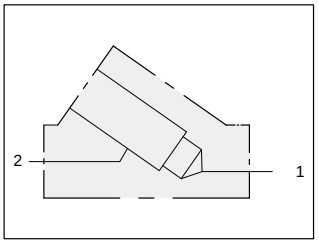

Inline body.

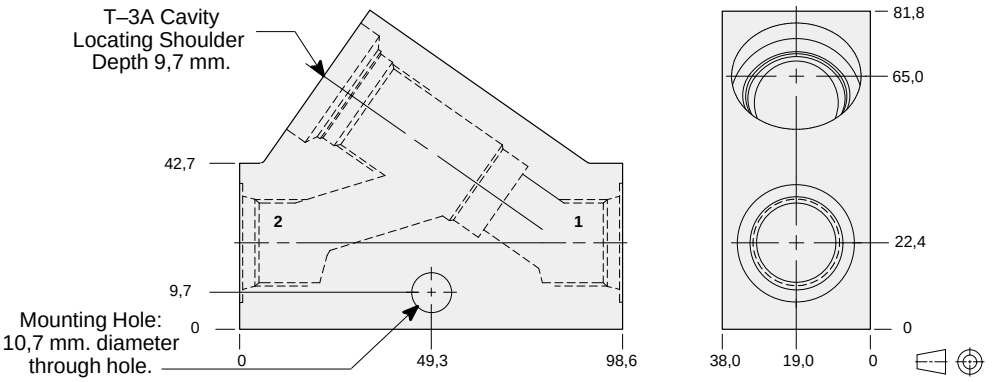

TYPICAL CARTRIDGES USED WITH THIS BODY

RPGC - *** Page 1.06
RPGE - *** Page 1.08
RDFA - *** Page 1.10
RQGB - *** Page 1.12
RPGD - *** Page 1.14
RBAB - *** Page 1.14
RBAA - *** Page 1.16
NQEB - *** Page 10.16

Instructions for ordering complete cartridge and body assemblies. Page viii

Pressure ratings, material specifications. Page 11.02

Ports 1 & 2	ALUMINIUM		SG IRON	
	Model Code	*List Price*	*Model Code*	*List Price*
.375 NPTF	**CGB**		**CGB/S**	
.50 NPTF	**CGC**		**CGC/S**	
.75 NPTF	**CGD**		**CGD/S**	
SAE-6	**CGI**		**CGI/S**	
SAE-8	**CGJ**		**CGJ/S**	
SAE-10	**CGK**		**CGK/S**	
.375 BSPP	**CGU**		**CGU/S**	
.50 BSPP	**CGV**		**CGV/S**	
.75 BSPP	**CGW**		**CGW/S**	

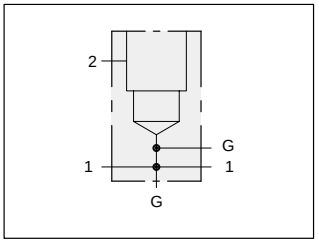

Through port body with gauge ports.

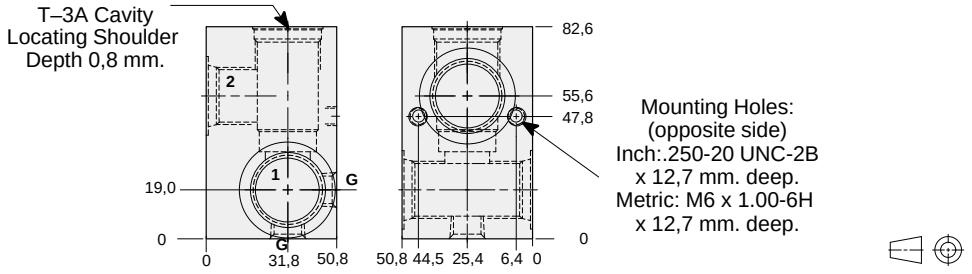

TYPICAL CARTRIDGES USED WITH THIS BODY

RPGC - *** Page 1.06
RPGE - *** Page 1.08
RDFA - *** Page 1.10
RQGB - *** Page 1.12
RPGD - *** Page 1.14
RBAB - *** Page 1.14
RBAA - *** Page 1.16
NQEB - *** Page 10.16

Instructions for ordering complete cartridge and body assemblies. Page viii

Pressure ratings, material specifications. Page 11.02

Mounting Hole Dimensions	*Ports 1 & 2*	*Gauge Port*	ALUMINIUM		SG IRON	
			Model Code	*List Price*	*Model Code*	*List Price*
Inch	.25 NPTF	.25 NPTF	**CEA**		**CEA/S**	
Inch	.375 NPTF	.25 NPTF	**CEB**		**CEB/S**	
Inch	.50 NPTF	.25 NPTF	**CEC**		**CEC/S**	
Inch	.75 NPTF	.25 NPTF	**CED**		**CED/S**	
Inch	SAE-4	.25 NPTF	**CEH**		**CEH/S**	
Inch	SAE-6	.25 NPTF	**CEI**		**CEI/S**	
Inch	SAE-8	.25 NPTF	**CEJ**		**CEJ/S**	
Inch	SAE-10	.25 NPTF	**CEK**		**CEK/S**	
Inch	SAE-12	.25 NPTF	**CEL**		**CEL/S**	
Metric	.25 BSPP	.25 BSPP	**CET**		**CET/S**	
Metric	.375 BSPP	.25 BSPP	**CEU**		**CEU/S**	
Metric	.50 BSPP	.25 BSPP	**CEV**		**CEV/S**	
Metric	.75 BSPP	.25 BSPP	**CEW**		**CEW/S**	

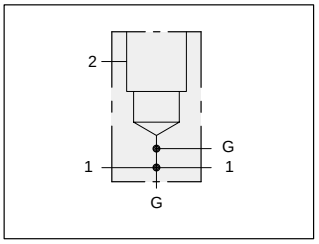

Through port body with gauge ports.

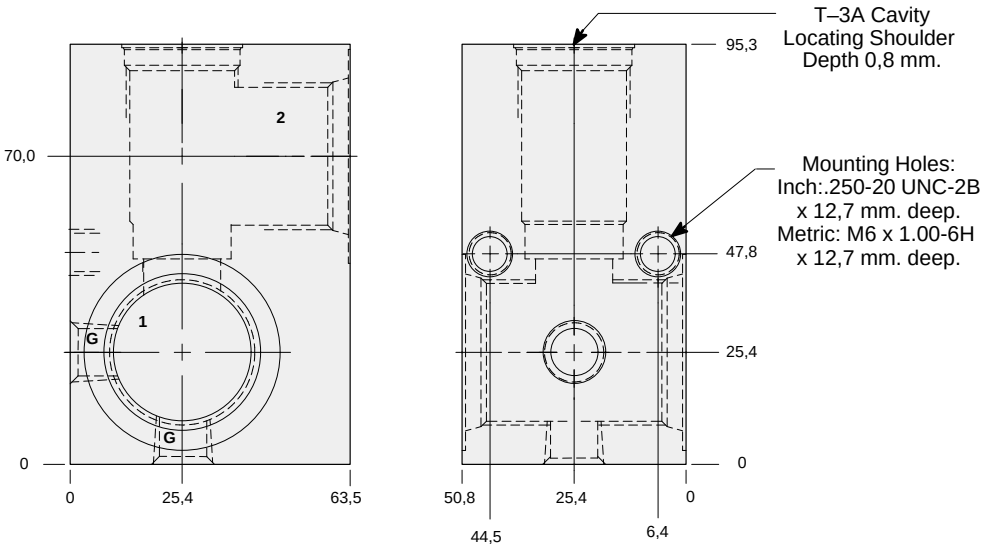

TYPICAL CARTRIDGES USED WITH THIS BODY

RPGC - ***	Page	1.06
RPGE - ***	Page	1.08
RDFA - ***	Page	1.10
RQGB - ***	Page	1.12
RPGD - ***	Page	1.14
NQEB - ***	Page	10.16

Instructions for ordering complete cartridge and body assemblies. Page viii

Pressure ratings, material specifications. Page 11.02

Mounting Hole Dimensions	*Ports 1 & 2*	*Gauge Port*	ALUMINIUM		SG IRON	
			Model Code	*List Price*	*Model Code*	*List Price*
Inch	1.00 NPTF	.25 NPTF	**CEE**		**CEE/S**	
Inch	SAE-16	.25 NPTF	**CEM**		**CEM/S**	
Metric	1.00 BSPP	.25 BSPP	**CEX**		**CEX/S**	

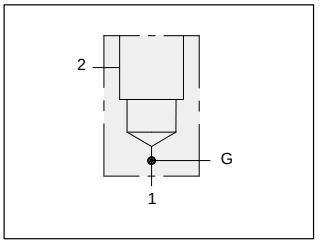

90 degree .75” SAE Code 61 flange port body with gauge port.

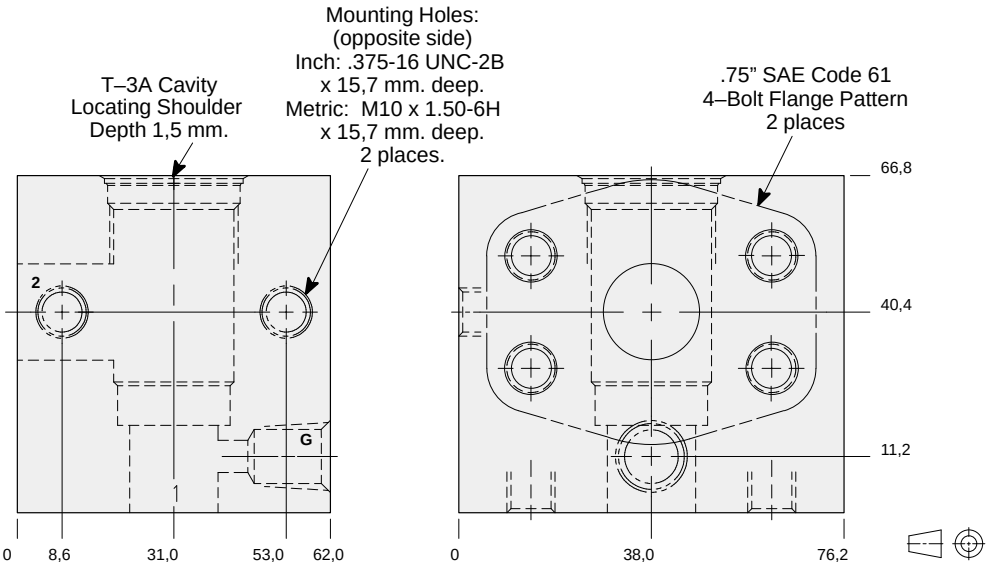

TYPICAL CARTRIDGES USED WITH THIS BODY

RPGC - ***	Page	1.06
RPGE - ***	Page	1.08
RDFA - ***	Page	1.10
RQGB - ***	Page	1.12
RPGD - ***	Page	1.14
NQEB - ***	Page	10.16
Instructions for ordering complete cartridge and body assemblies.	Page	viii
Pressure ratings, material specifications.	Page	11.02
SAE Specifications.	Page	11.03

Mounting Hole Dimensions	*Gauge Port*	ALUMINIUM		SG IRON	
		Model Code	*List Price*	*Model Code*	*List Price*
Inch	.25 NPTF	**CAO**		**CAO/S**	
Metric	.25 BSPP	**CAO/M**		**CAO/T**	

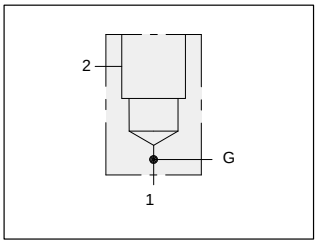

90 degree .75” SAE Code 62 flange port body with gauge port.

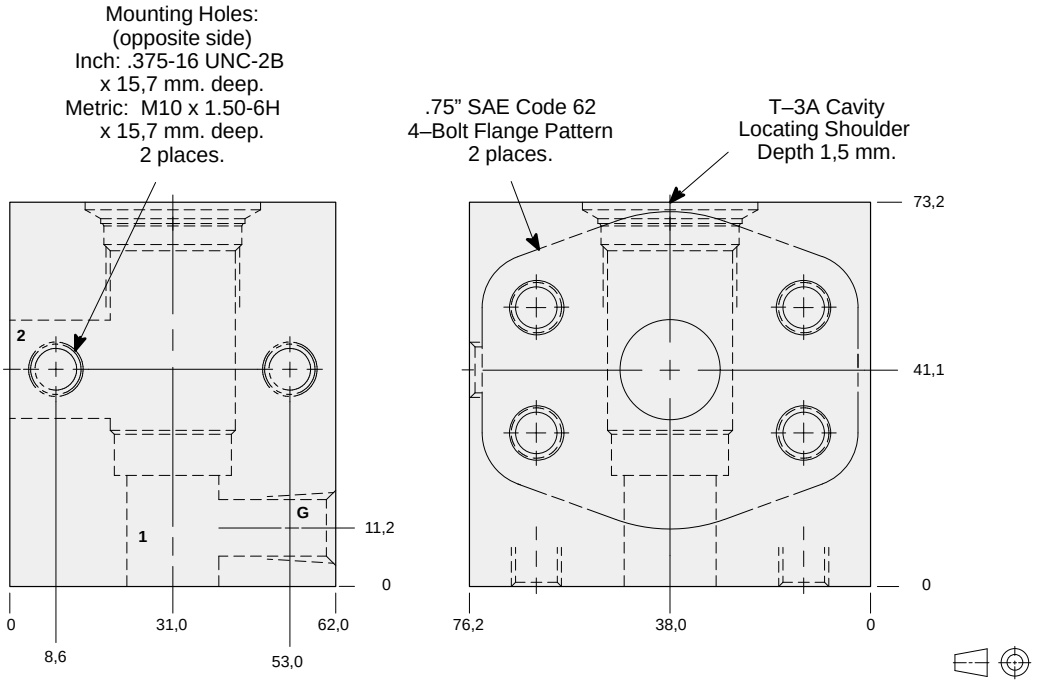

TYPICAL CARTRIDGES USED WITH THIS BODY

RPGC - ***	Page	1.06
RPGE - ***	Page	1.08
RDFA - ***	Page	1.10
RQGB - ***	Page	1.12
RPGD - ***	Page	1.14
NQEB - ***	Page	10.16
Instructions for ordering complete cartridge and body assemblies.	Page	viii
Pressure ratings, material specifications.	Page	11.02
SAE Specifications.	Page	11.03

Mounting Hole Dimensions	*Gauge Port*	ALUMINIUM		SG IRON	
		Model Code	*List Price*	*Model Code*	*List Price*
Inch	.25 NPTF	**CA3**		**CA3/S**	
Metric	.25 BSPP	**CA3/M**		**CA3/T**	

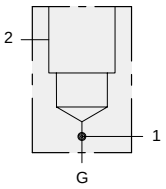

90 degree 1.00” SAE Code 61 flange port body with gauge port.

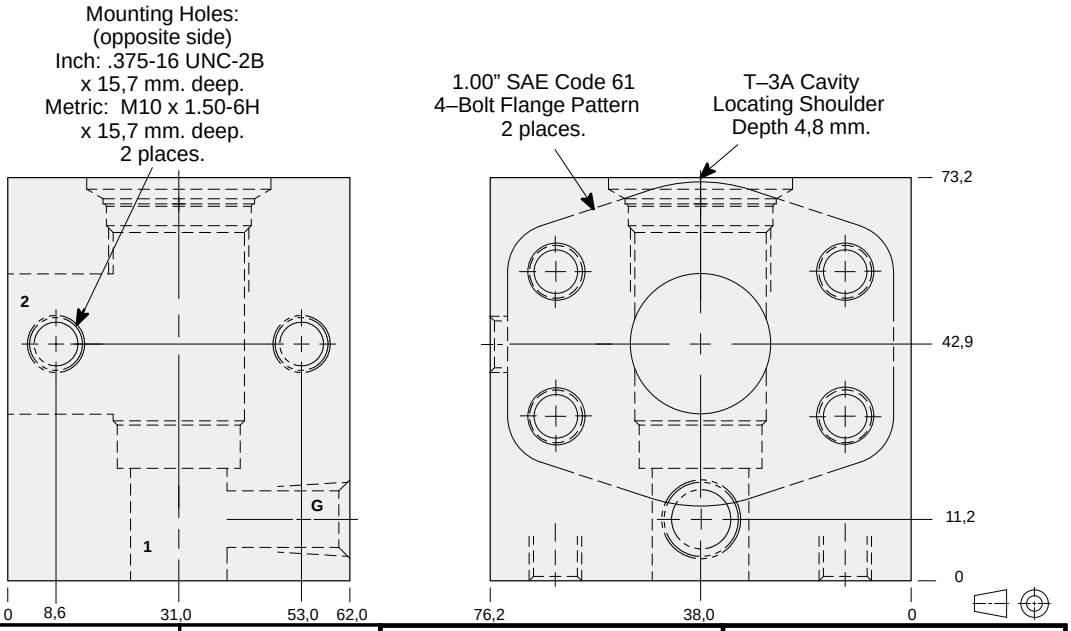

TYPICAL CARTRIDGES USED WITH THIS BODY

RPGC - ***	Page	1.06
RPGE - ***	Page	1.08
RDFA - ***	Page	1.10
RQGB - ***	Page	1.12
RPGD - ***	Page	1.14
NQEB - ***	Page	10.16

Instructions for ordering complete cartridge and body assemblies. Page viii

Pressure ratings, material specifications. Page 11.02

SAE Specifications. Page 11.03

Mounting Hole Dimensions	*Gauge Port*	ALUMINIUM		SG IRON	
		Model Code	*List Price*	*Model Code*	*List Price*
Inch	.25 NPTF	**CAP**		**CAP/S**	
Metric	.25 BSPP	**CAP/M**		**CAP/T**	

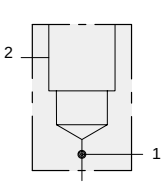

90 degree 1.00” SAE Code 62 flange port body with gauge port.

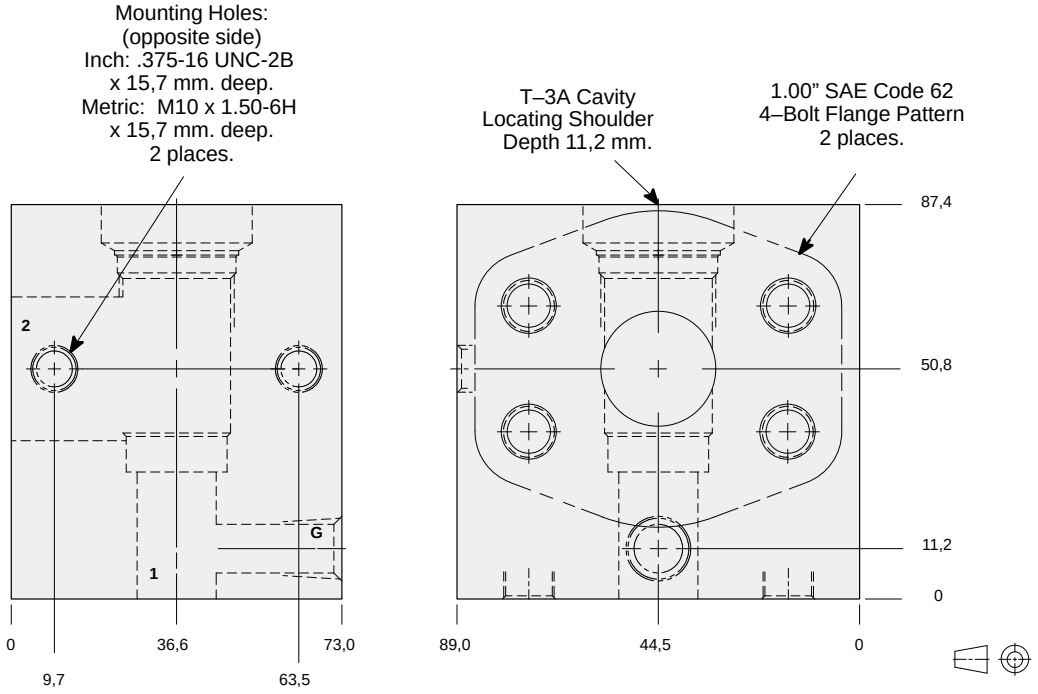

TYPICAL CARTRIDGES USED WITH THIS BODY

RPGC - ***	Page	1.06
RPGE - ***	Page	1.08
RDFA - ***	Page	1.10
RQGB - ***	Page	1.12
RPGD - ***	Page	1.14
NQEB - ***	Page	10.16

Instructions for ordering complete cartridge and body assemblies. Page viii

Pressure ratings, material specifications. Page 11.02

SAE Specifications. Page 11.03

Mounting Hole Dimensions	*Gauge Port*	ALUMINIUM		SG IRON	
		Model Code	*List Price*	*Model Code*	*List Price*
Inch	.25 NPTF	**CA4**		**CA4/S**	
Metric	.25 BSPP	**CA4/M**		**CA4/T**	

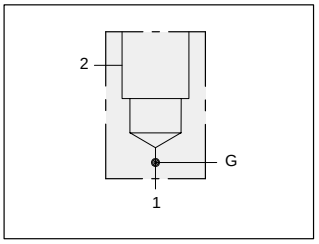

90 degree 1.25” SAE Code 61 flange port body with gauge port.

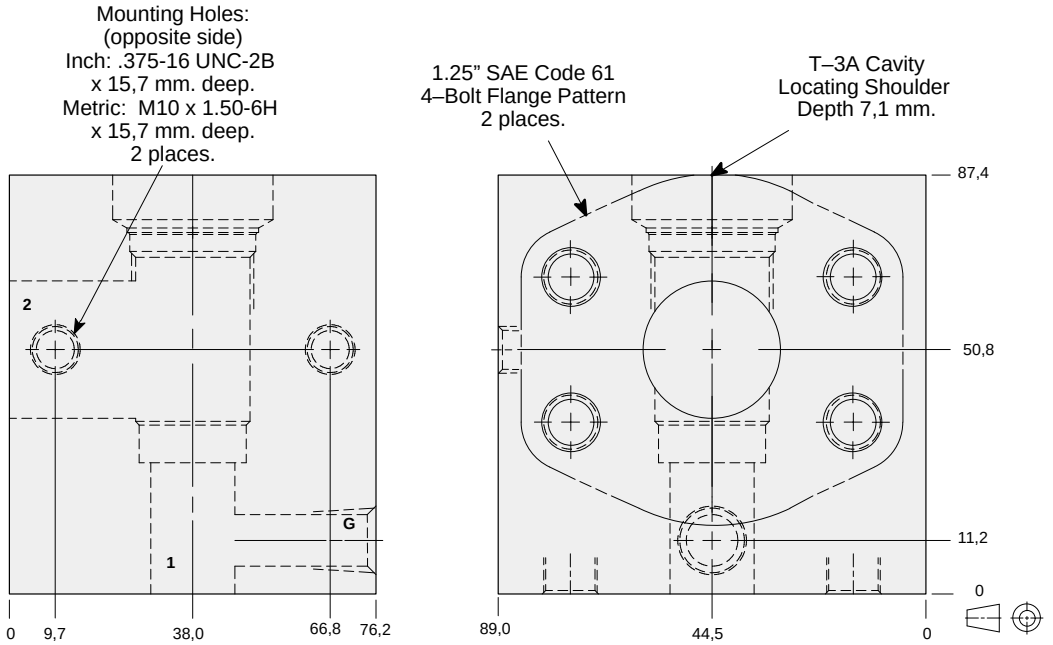

TYPICAL CARTRIDGES USED WITH THIS BODY

RPGC - ***	Page	1.06
RPGE - ***	Page	1.08
RDFA - ***	Page	1.10
RQGB - ***	Page	1.12
RQGB - ***	Page	1.12
NQEB - ***	Page	10.16

Instructions for ordering complete cartridge and body assemblies. Page viii

Pressure ratings, material specifications. Page 11.02

SAE Specifications. Page 11.03

Mounting Hole Dimensions	*Gauge Port*	ALUMINIUM		SG IRON	
		Model Code	*List Price*	*Model Code*	*List Price*
Inch	.25 NPTF	**CAQ**		**CAQ/S**	
Metric	.25 BSPP	**CAQ/M**		**CAQ/T**	

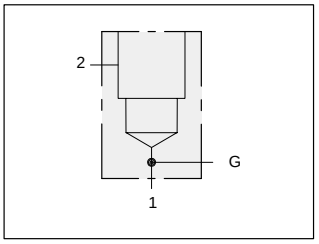

90 degree 1.25” SAE Code 62 flange port body with gauge port.

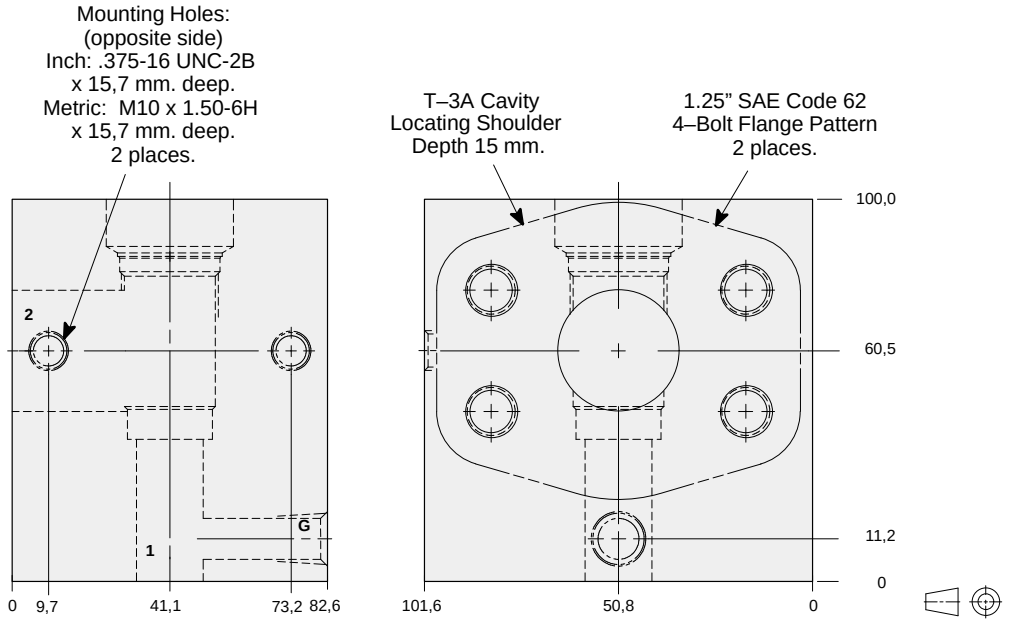

TYPICAL CARTRIDGES USED WITH THIS BODY

RPGC - ***	Page	1.06
RPGE - ***	Page	1.08
RDFA - ***	Page	1.10
RQGB - ***	Page	1.12
RPGD - ***	Page	1.14
NQEB - ***	Page	10.16

Instructions for ordering complete cartridge and body assemblies. Page viii

Pressure ratings, material specifications. Page 11.02

SAE Specifications. Page 11.03

Mounting Hole Dimensions	*Gauge Port*	ALUMINIUM		SG IRON	
		Model Code	*List Price*	*Model Code*	*List Price*
Inch	.25 NPTF	**CA5**		**CA5/S**	
Metric	.25 BSPP	**CA5/M**		**CA5/T**	

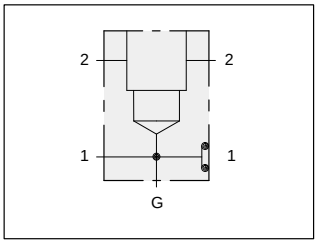

Sandwich mount through port 1.00” SAE Code 61 body with gauge port.

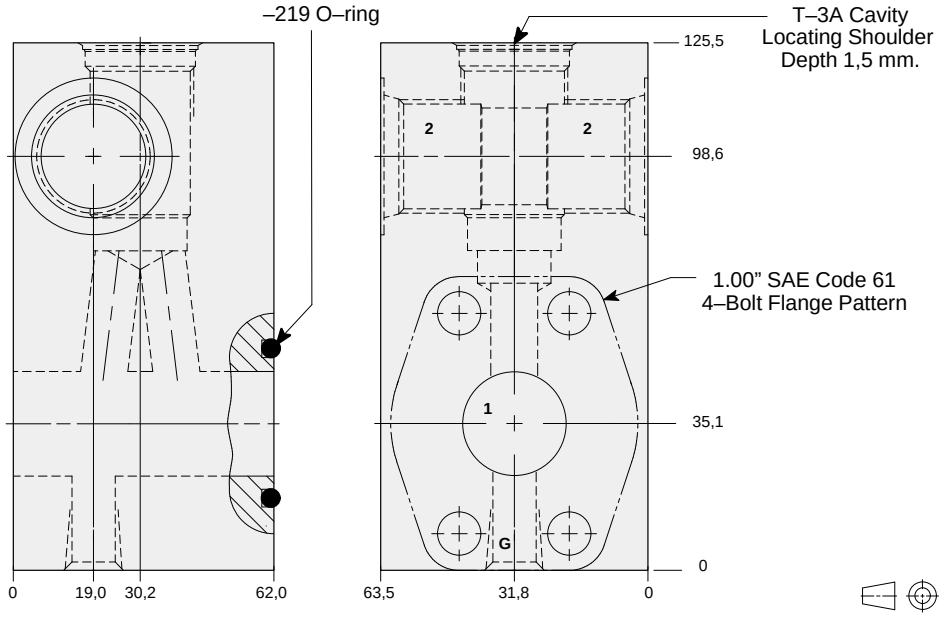

TYPICAL CARTRIDGES USED WITH THIS BODY

RPGC - ***	Page	1.06
RPGE - ***	Page	1.08
RDFA - ***	Page	1.10
RQGB - ***	Page	1.12
RPGD - ***	Page	1.14
NQEB - ***	Page	10.16

Cartridge seal type determines O–ring type.

Instructions for ordering complete cartridge and body assemblies. Page viii

Pressure ratings, material specifications. Page 11.02

SAE Specifications. Page 11.03

Mounting Hole Dimensions	*Port 2*	*Gauge Port*	ALUMINIUM		SG IRON	
			Model Code	*List Price*	*Model Code*	*List Price*
Inch	.75 NPTF	.25 NPTF	**ZQL**		**ZQL/S**	
Inch	SAE-12	.25 NPTF	**ZQK**		**ZQK/S**	
Metric	.75 BSPP	.25 BSPP	**ZQJ/M**		**ZQJ/T**	

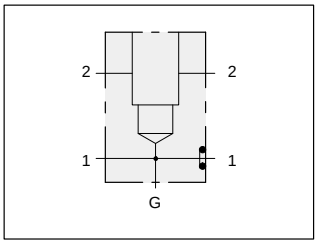

Sandwich mount through port 1.00” SAE Code 62 body with gauge port.

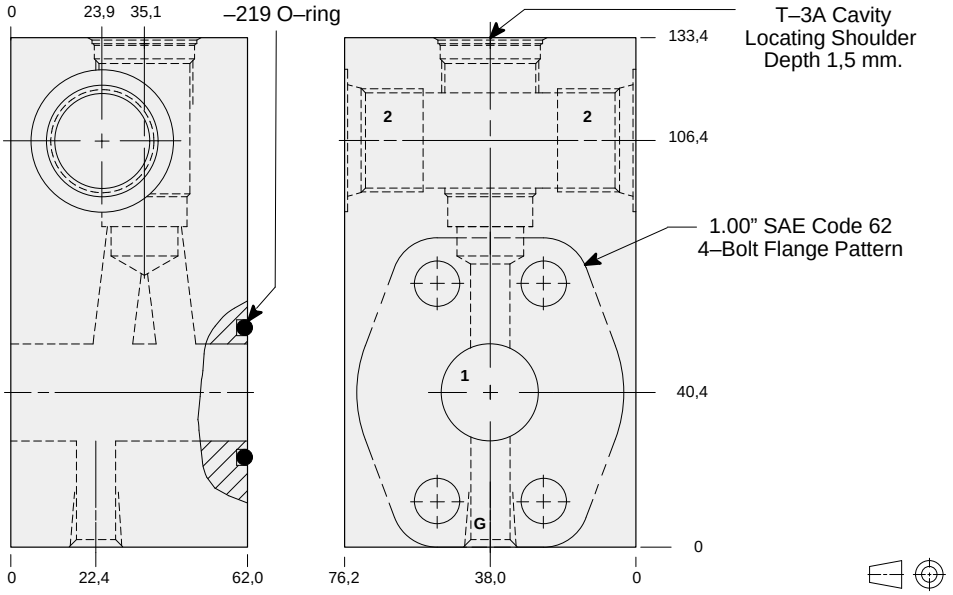

TYPICAL CARTRIDGES USED WITH THIS BODY

RPGC - ***	Page	1.06
RPGE - ***	Page	1.08
RDFA - ***	Page	1.10
RQGB - ***	Page	1.12
RPGD - ***	Page	1.14
NQEB - ***	Page	10.16

Cartridge seal type determines O–ring type.

Instructions for ordering complete cartridge and body assemblies. Page viii

Pressure ratings, material specifications. Page 11.02

SAE Specifications. Page 11.03

Mounting Hole Dimensions	*Port 2*	*Gauge Port*	ALUMINIUM		SG IRON	
			Model Code	*List Price*	*Model Code*	*List Price*
Inch	.75 NPTF	.25 NPTF	**ZCH**		**ZCH/S**	
Inch	SAE-12	.25 NPTF	**ZCG**		**ZCG/S**	
Metric	.75 BSPP	.25 BSPP	**ZCF/M**		**ZCF/T**	

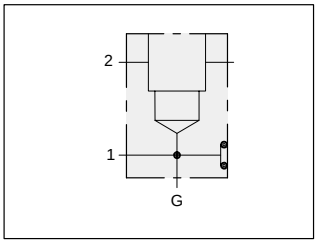

Sandwich mount through port 1.25” SAE Code 61 body with gauge port.

TYPICAL CARTRIDGES USED WITH THIS BODY

RPGC - ***	Page	1.06
RPGE - ***	Page	1.08
RDFA - ***	Page	1.10
RQGB - ***	Page	1.12
RPGD - ***	Page	1.14
NQEB - ***	Page	10.16

Cartridge seal type determines O–ring type.

Instructions for ordering complete cartridge and body assemblies. Page viii

Pressure ratings, material specifications. Page 11.02

SAE Specifications. Page 11.03

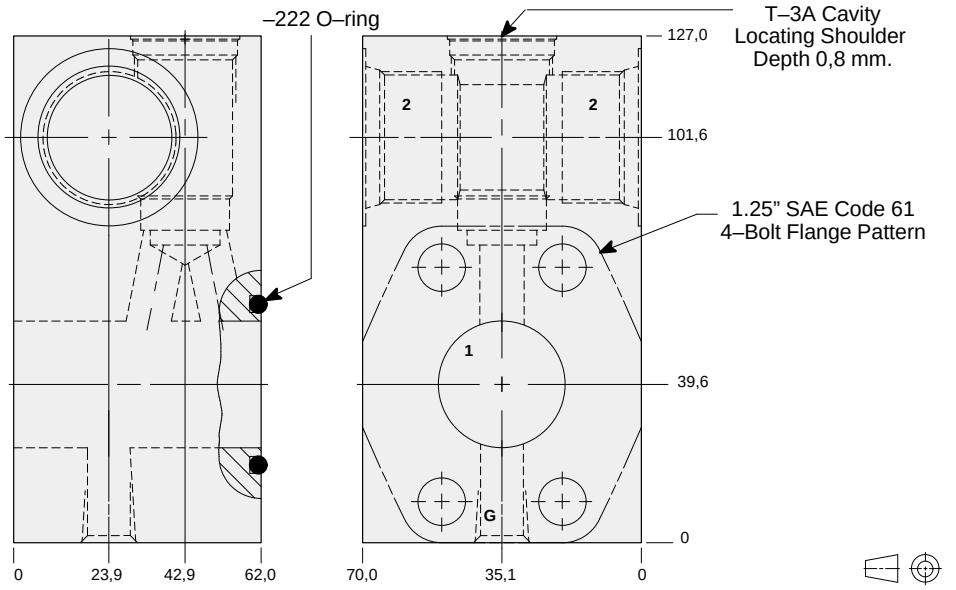

Mounting Hole Dimensions	*Port 2*	*Gauge Port*	ALUMINIUM		SG IRON	
			Model Code	*List Price*	*Model Code*	*List Price*
Inch	1.00 NPTF	.25 NPTF	**ZQH**		**ZQH/S**	
Inch	SAE-16	.25 NPTF	**ZQG**		**ZQG/S**	
Metric	1.00 BSPP	.25 BSPP	**ZQF/M**		**ZQF/T**	

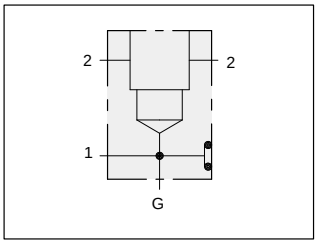

Sandwich mount through port 1.25” SAE Code 62 body with gauge port.

TYPICAL CARTRIDGES USED WITH THIS BODY

RPGC - ***	Page	1.06
RPGE - ***	Page	1.08
RDFA - ***	Page	1.10
RQGB - ***	Page	1.12
RPGD - ***	Page	1.14
NQEB - ***	Page	10.16

Cartridge seal type determines O–ring type.

Instructions for ordering complete cartridge and body assemblies. Page viii

Pressure ratings, material specifications. Page 11.02

SAE Specifications. Page 11.03

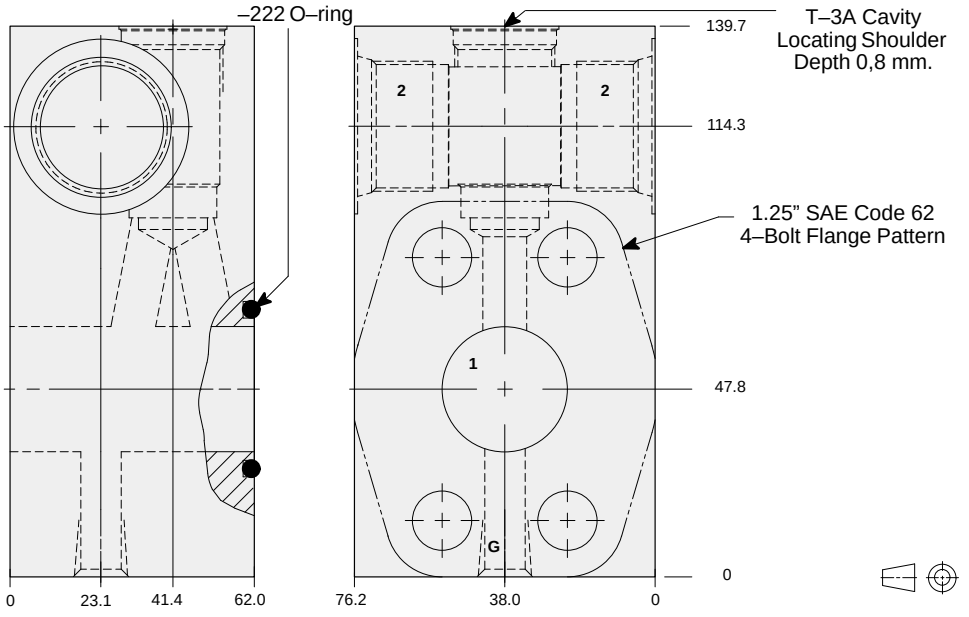

Mounting Hole Dimensions	*Port 2*	*Gauge Port*	ALUMINIUM		SG IRON	
			Model Code	*List Price*	*Model Code*	*List Price*
Inch	1.00 NPTF	.25 NPTF	**ZBX**		**ZBX/S**	
Inch	SAE-16	.25 NPTF	**ZBW**		**ZBW/S**	
Metric	1.00 BSPP	.25 BSPP	**ZBV/M**		**ZBV/T**	

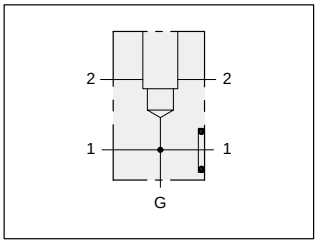

Sandwich mount through port 1.25” SAE Code 61 flange port body with gauge port.

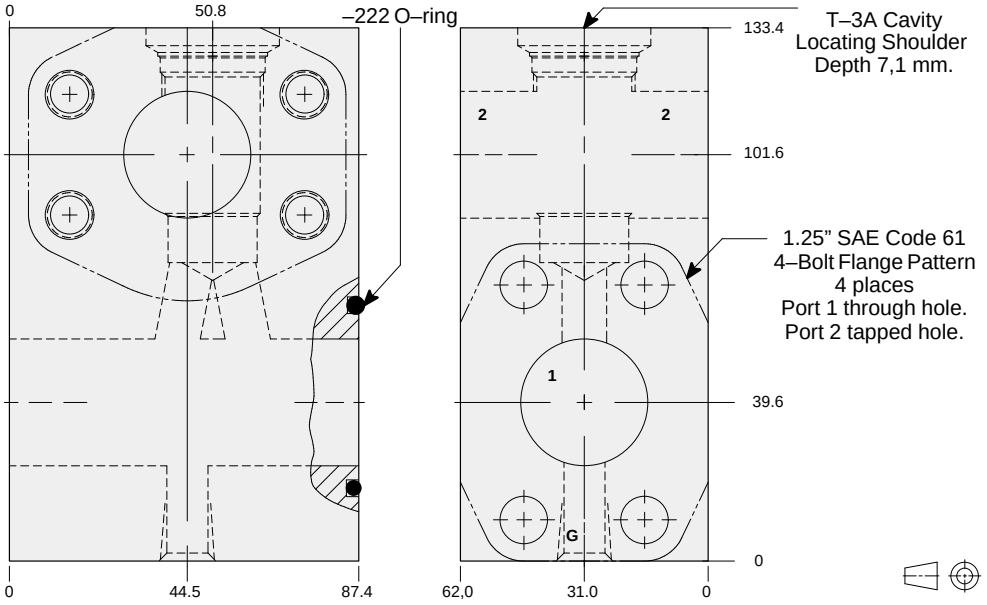

TYPICAL CARTRIDGES USED WITH THIS BODY

RPGC - ***	Page	1.06
RPGE - ***	Page	1.08
RDFA - ***	Page	1.10
RQGB - ***	Page	1.12
RPGD - ***	Page	1.14
NQEB - ***	Page	10.16

Cartridge seal type determines O–ring type.

Instructions for ordering complete cartridge and body assemblies. Page viii

Pressure ratings, material specifications. Page 11.02

SAE Specifications. Page 11.03

Mounting Hole Dimensions	*Gauge Port*	ALUMINIUM		SG IRON	
		Model Code	*List Price*	*Model Code*	*List Price*
Inch	.25 NPTF	**ZQE**		**ZQE/S**	
Metric	.25 BSPP	**ZQE/M**		**ZQE/T**	

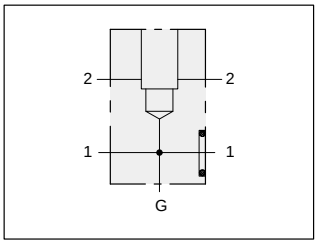

Sandwich mount through port 1.25” SAE Code 62 flange port body with gauge port.

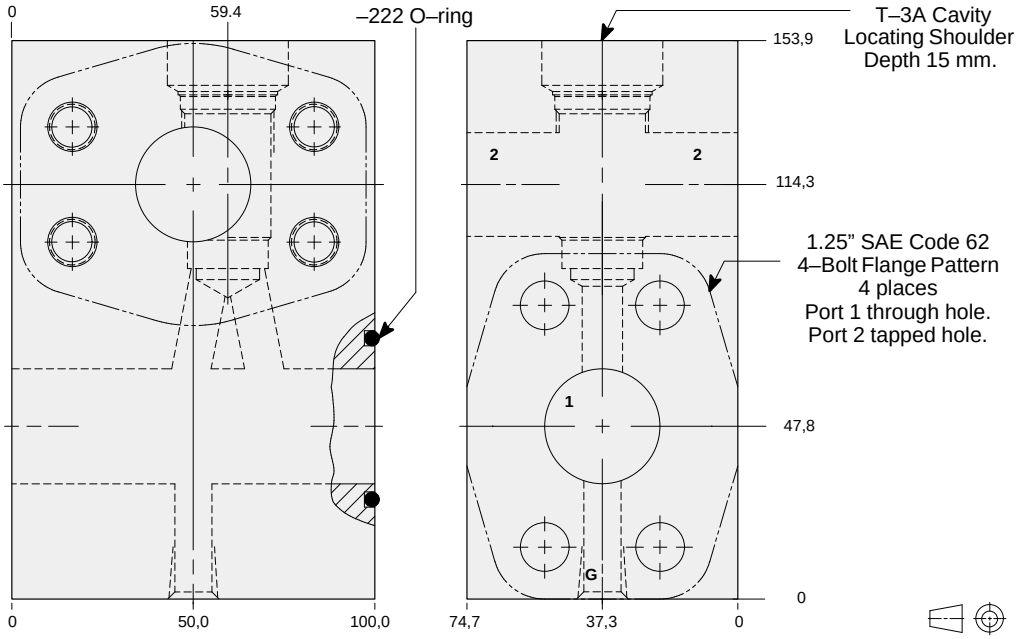

TYPICAL CARTRIDGES USED WITH THIS BODY

RPGC - ***	Page	1.06
RPGE - ***	Page	1.08
RDFA - ***	Page	1.10
RQGB - ***	Page	1.12
RPGD - ***	Page	1.14
NQEB - ***	Page	10.16

Cartridge seal type determines O–ring type.

Instructions for ordering complete cartridge and body assemblies. Page viii

Pressure ratings, material specifications. Page 11.02

SAE Specifications. Page 11.03

Mounting Hole Dimensions	*Gauge Port*	ALUMINIUM		SG IRON	
		Model Code	*List Price*	*Model Code*	*List Price*
Inch	.25 NPTF	**ZDB**		**ZDB/S**	
Metric	.25 BSPP	**ZDB/M**		**ZDB/T**	

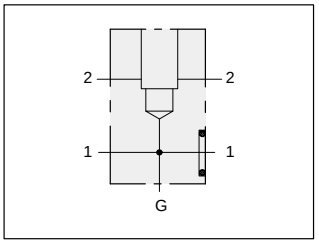

TYPICAL CARTRIDGES USED WITH THIS BODY

RPGC - ***	Page	1.06
RPGE - ***	Page	1.08
RDFA - ***	Page	1.10
RQGB - ***	Page	1.12
RPGD - ***	Page	1.14
NQEB - ***	Page	10.16

Cartridge seal type determines O–ring type.

Instructions for ordering complete cartridge and body assemblies. Page viii

Pressure ratings, material specifications. Page 11.02

SAE Specifications. Page 11.03

Flange mount through port 1.00” SAE Code 61 body with threaded outlet and gauge port.

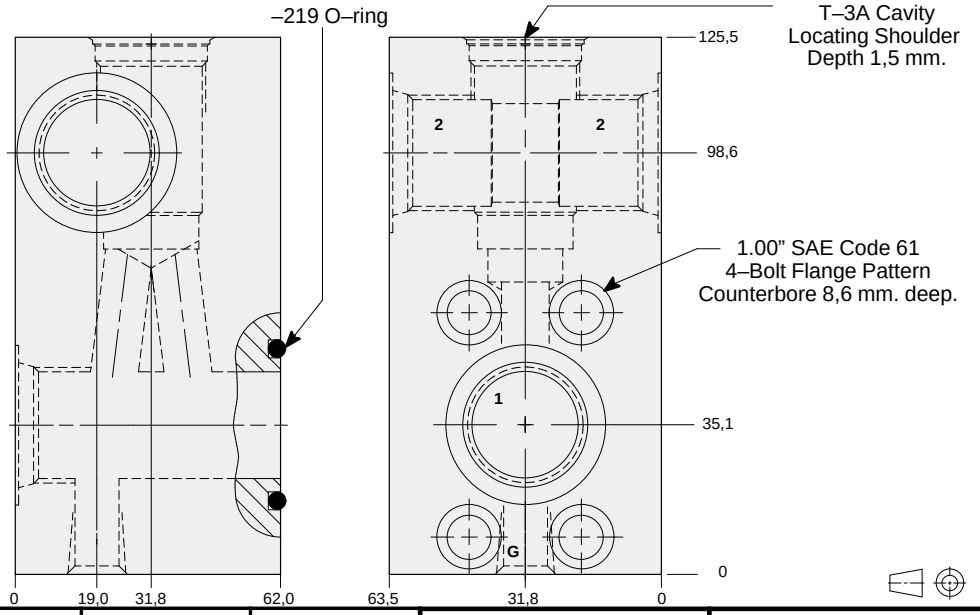

Mounting Hole Dimensions	*Ports 1 & 2*	*Gauge Port*	ALUMINIUM		SG IRON	
			Model Code	*List Price*	*Model Code*	*List Price*
Inch	.75 NPTF	.25 NPTF	**ZCL**		**ZCL/S**	
Inch	SAE-12	.25 NPTF	**ZCK**		**ZCK/S**	
Metric	.75 BSPP	.25 BSPP	**ZCJ/M**		**ZCJ/T**	

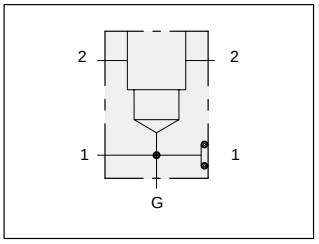

TYPICAL CARTRIDGES USED WITH THIS BODY

RPGC - ***	Page	1.06
RPGE - ***	Page	1.08
RDFA - ***	Page	1.10
RQGB - ***	Page	1.12
RPGD - ***	Page	1.14
NQEB - ***	Page	10.16

Cartridge seal type determines O–ring type.

Instructions for ordering complete cartridge and body assemblies. Page viii

Pressure ratings, material specifications. Page 11.02

SAE Specifications. Page 11.03

Flange mount through port 1.00” SAE Code 62 body with threaded outlet and gauge port.

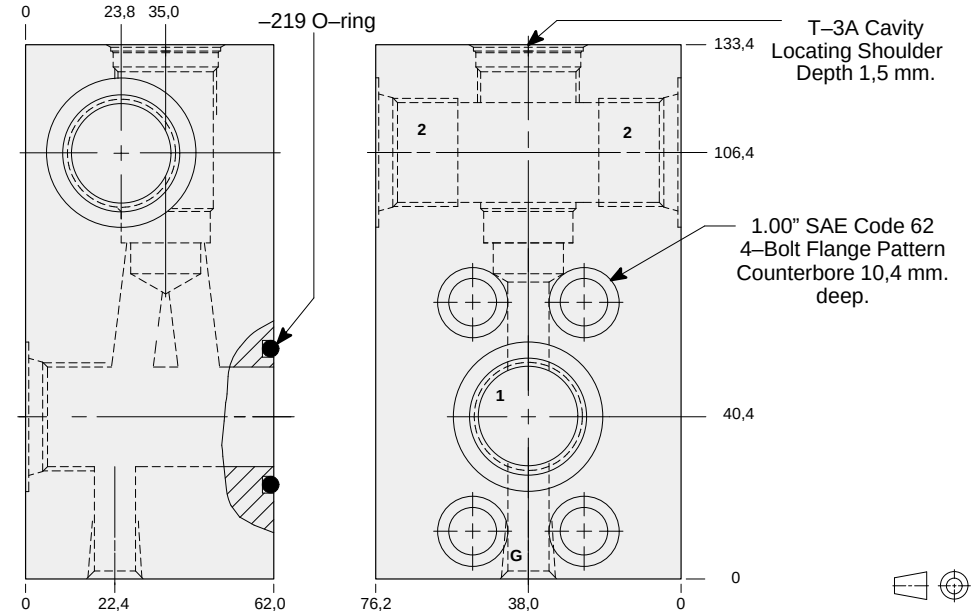

Mounting Hole Dimensions	*Ports 1 & 2*	*Gauge Port*	ALUMINIUM		SG IRON	
			Model Code	*List Price*	*Model Code*	*List Price*
Inch	.75 NPTF	.25 NPTF	**ZCD**		**ZCD/S**	
Inch	SAE-12	.25 NPTF	**ZCC**		**ZCC/S**	
Metric	.75 BSPP	.25 BSPP	**ZCB/M**		**ZCB/T**	

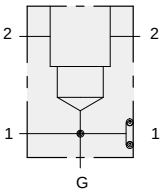

Flange mount through port 1.25” SAE Code 61 body with threaded outlet and gauge port.

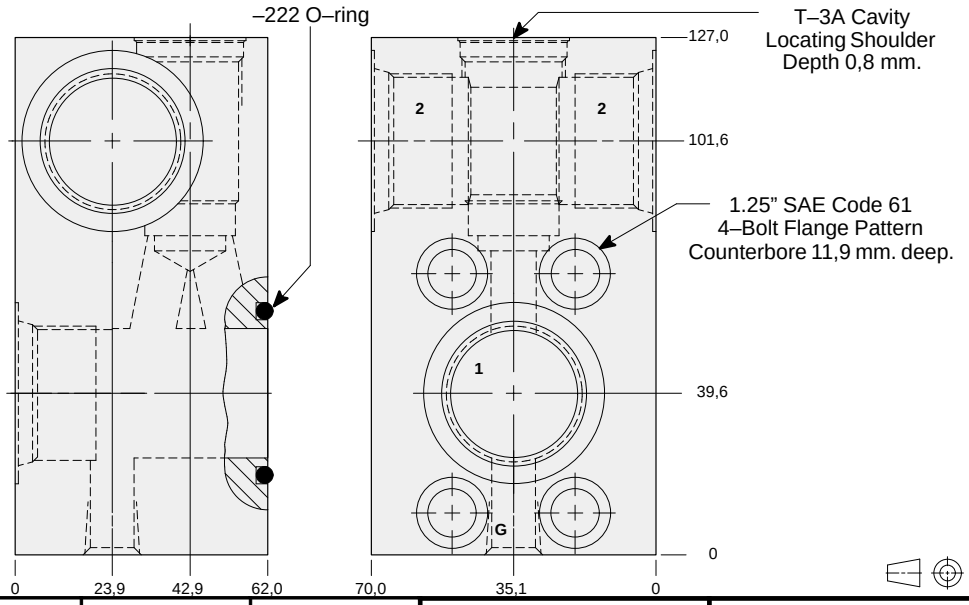

TYPICAL CARTRIDGES USED WITH THIS BODY

RPGC - ***	Page	1.06
RPGE - ***	Page	1.08
RDFA - ***	Page	1.10
RQGB - ***	Page	1.12
RPGD - ***	Page	1.14
NQEB - ***	Page	10.16

Cartridge seal type determines O–ring type.

Instructions for ordering complete cartridge and body assemblies. Page viii

Pressure ratings, material specifications. Page 11.02

SAE Specifications. Page 11.03

Mounting Hole Dimensions	*Ports 1 & 2*	*Gauge Port*	ALUMINIUM		SG IRON	
			Model Code	*List Price*	*Model Code*	*List Price*
Inch	1.00 NPTF	.25 NPTF	**ZBZ**		**ZBZ/S**	
Inch	SAE-16	.25 NPTF	**ZKE**		**ZKE/S**	
Metric	1.00 BSPP	.25 BSPP	**ZBY/M**		**ZBY/T**	

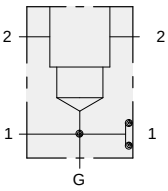

Flange mount through port 1.25” SAE Code 62 body with threaded outlet and gauge port.

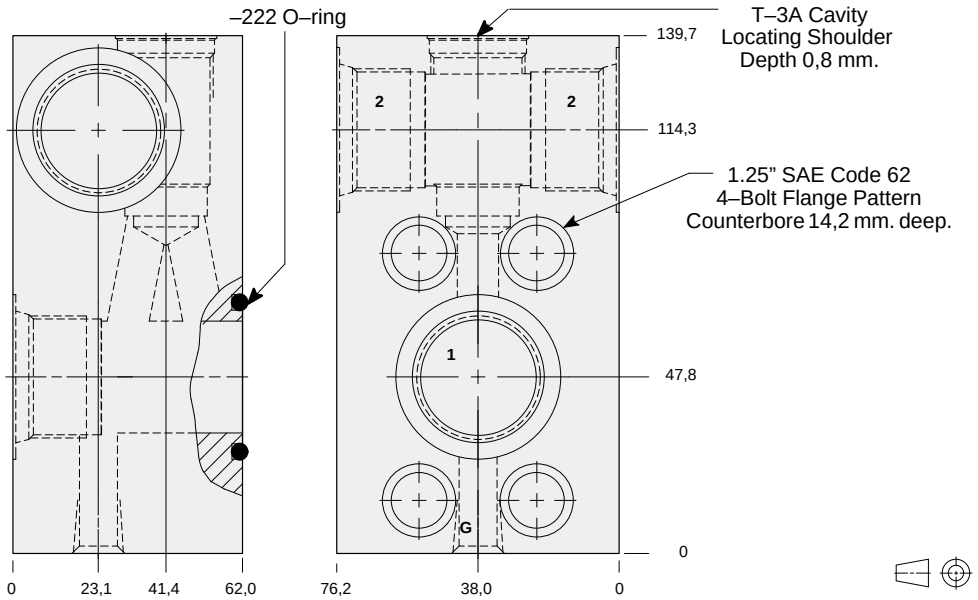

TYPICAL CARTRIDGES USED WITH THIS BODY

RPGC - ***	Page	1.06
RPGE - ***	Page	1.08
RDFA - ***	Page	1.10
RQGB - ***	Page	1.12
RPGD - ***	Page	1.14
NQEB - ***	Page	10.16

Cartridge seal type determines O–ring type.

Instructions for ordering complete cartridge and body assemblies. Page viii

Pressure ratings, material specifications. Page 11.02

SAE Specifications. Page 11.03

Mounting Hole Dimensions	*Ports 1 & 2*	*Gauge Port*	ALUMINIUM		SG IRON	
			Model Code	*List Price*	*Model Code*	*List Price*
Inch	1.00 NPTF	.25 NPTF	**ZBT**		**ZBT/S**	
Inch	SAE-16	.25 NPTF	**ZBS**		**ZBS/S**	
Metric	1.00 BSPP	.25 BSPP	**ZBR/M**		**ZBR/T**	

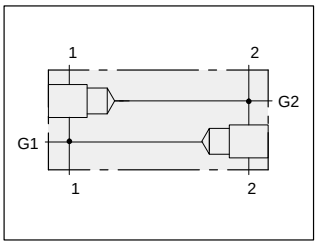

Two cavity body with gauge ports for cross–port relief applications.

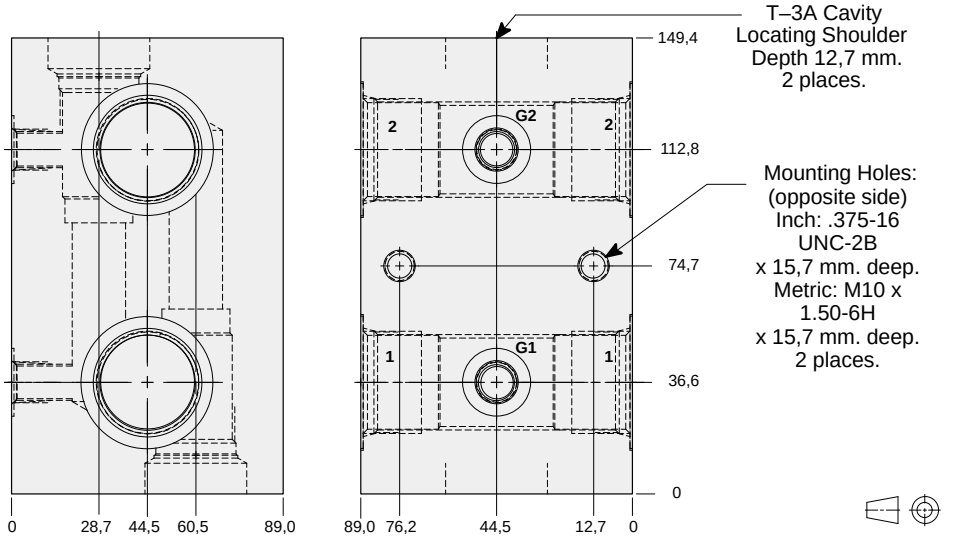

TYPICAL CARTRIDGES USED WITH THIS BODY

RPGC - *** Page 1.06
RPGE - *** Page 1.08
RDFA - *** Page 1.10
RQGB - *** Page 1.12

Instructions for ordering complete cartridge and body assemblies. Page viii

Pressure ratings, material specifications. Page 11.02

Mounting Hole Dimensions	*Ports 1 & 2*	*Gauge Port*	ALUMINIUM		SG IRON	
			Model Code	*List Price*	*Model Code*	*List Price*
Inch	.75 NPTF	.25 NPTF	**YCD**		**YCD/S**	
Inch	1.00 NPTF	.25 NPTF	**YCE**		**YCE/S**	
Inch	SAE-12	.25 NPTF	**YCL**		**YCL/S**	
Inch	SAE-16	.25 NPTF	**YCM**		**YCM/S**	
Metric	.75 BSPP	.25 BSPP	**YCW**		**YCW/S**	
Metric	1.00 BSPP	.25 BSPP	**YCX**		**YCX/S**	

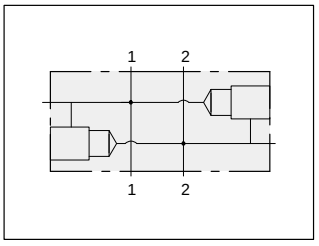

Two cavity body for cross–port relief applications.

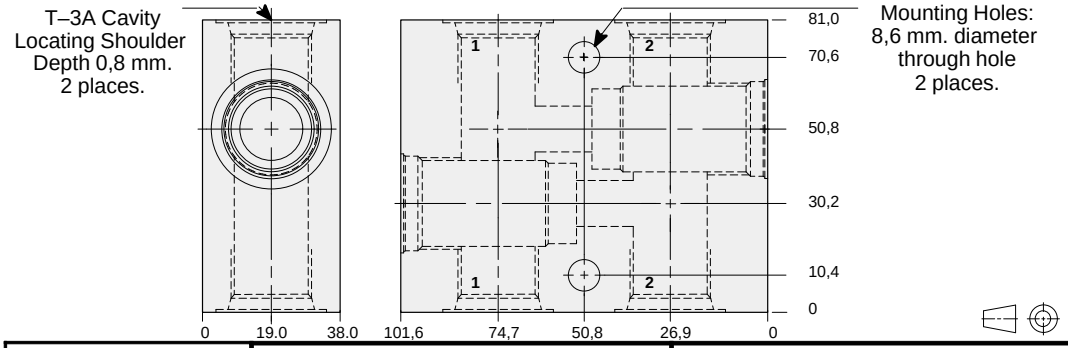

TYPICAL CARTRIDGES USED WITH THIS BODY

RPGC - *** Page 1.06
RPGE - *** Page 1.08
RDFA - *** Page 1.10
RQGB - *** Page 1.12

Instructions for ordering complete cartridge and body assemblies. Page viii

Pressure ratings, material specifications. Page 11.02

Ports 1 & 2	ALUMINIUM		SG IRON	
	Model Code	*List Price*	*Model Code*	*List Price*
.25 NPTF	**YBA**		**YBA/S**	
.375 NPTF	**YBB**		**YBB/S**	
.50 NPTF	**YBC**		**YBC/S**	
.75 NPTF	**YBD**		**YBD/S**	
SAE-6	**YBI**		**YBI/S**	
SAE-8	**YBJ**		**YBJ/S**	
SAE-10	**YBK**		**YBK/S**	
.75 BSPP	**YBO**		**YBO/S**	
.25 BSPP	**YBT**		**YBT/S**	
.375 BSPP	**YBU**		**YBU/S**	
.50 BSPP	**YBV**		**YBV/S**	

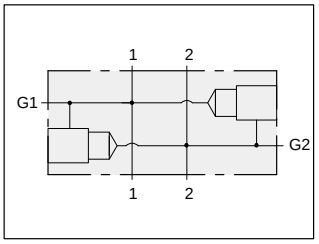

TYPICAL CARTRIDGES USED WITH THIS BODY

RPGC - ***	Page	1.06
RPGE - ***	Page	1.08
RDFA - ***	Page	1.10
RQGB - ***	Page	1.12

Instructions for ordering complete cartridge and body assemblies.	Page	viii
Pressure ratings, material specifications.	Page	11.02
SAE Specifications.	Page	11.03

Two cavity 1.00” SAE Code 61 flange port body with gauge ports for cross–port relief applications.

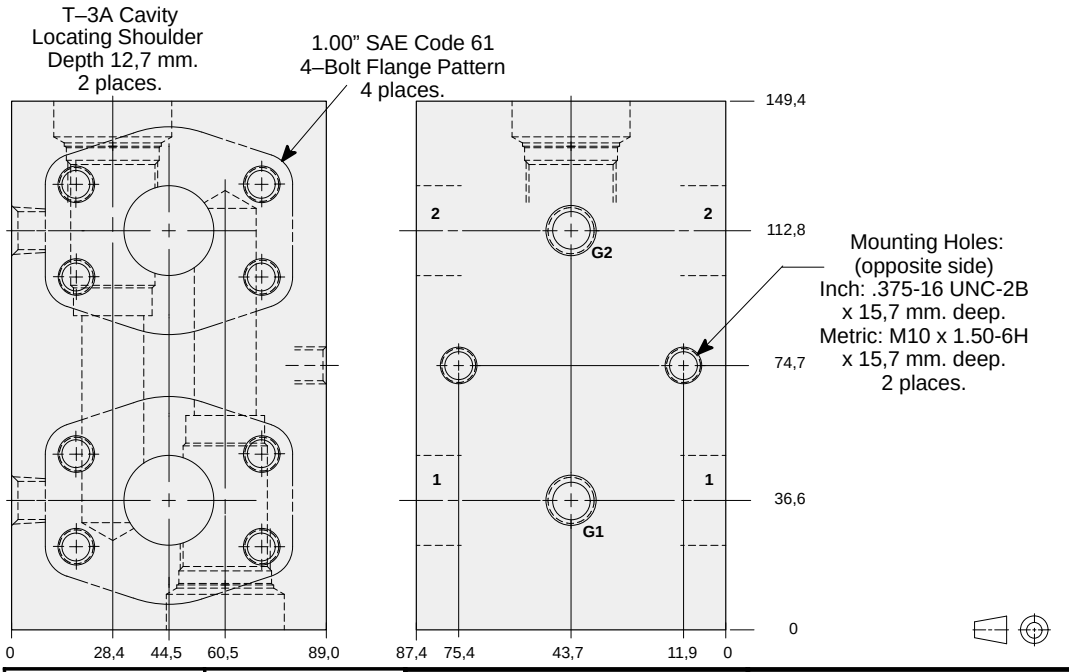

Mounting Hole Dimensions	*Gauge Port*	ALUMINIUM		SG IRON	
		Model Code	*List Price*	*Model Code*	*List Price*
Inch	.25 NPTF	**YCP**		**YCP/S**	
Metric	.25 BSPP	**YCP/M**		**YCP/T**	

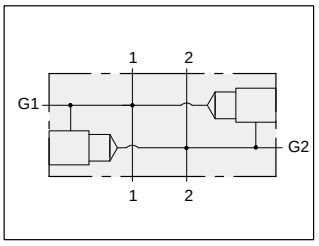

TYPICAL CARTRIDGES USED WITH THIS BODY

RPGC - ***	Page	1.06
RPGE - ***	Page	1.08
RDFA - ***	Page	1.10
RQGB - ***	Page	1.12

Instructions for ordering complete cartridge and body assemblies.	Page	viii
Pressure ratings, material specifications.	Page	11.02
SAE Specifications.	Page	11.03

Two cavity 1.00” SAE Code 62 flange port body with gauge ports for cross–port relief applications.

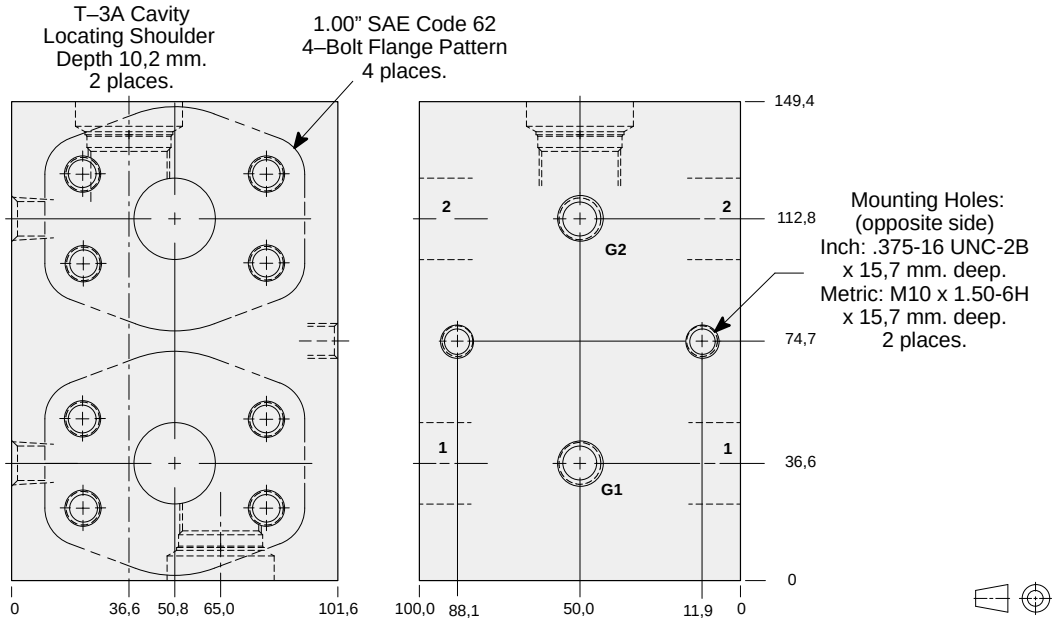

Mounting Hole Dimensions	*Gauge Port*	ALUMINIUM		SG IRON	
		Model Code	*List Price*	*Model Code*	*List Price*
Inch	.25 NPTF	**YC4**		**YC4/S**	
Metric	.25 BSPP	**YC4/M**		**YC4/T**	

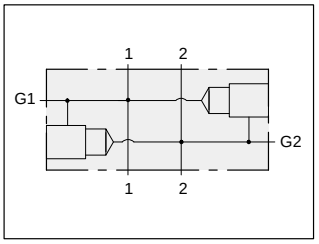

Two cavity 1.25” SAE Code 61 flange port body with gauge ports for cross–port relief applications.

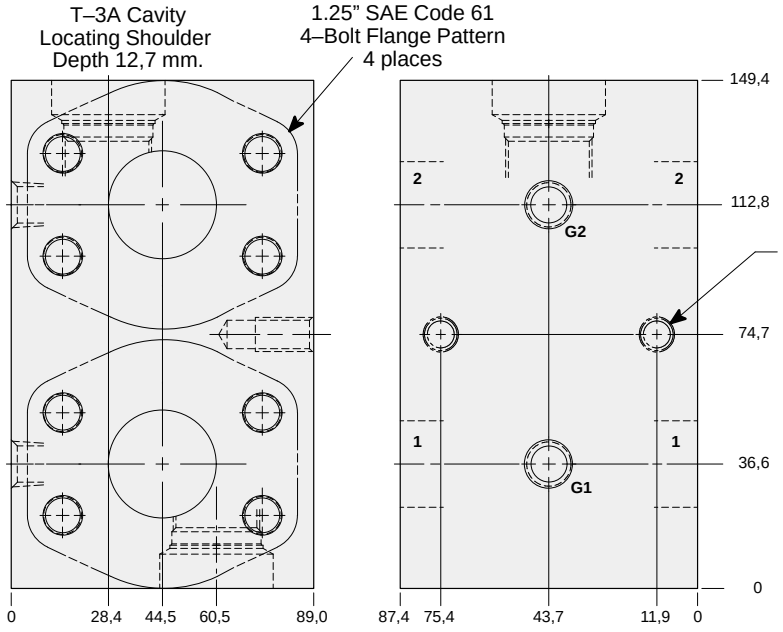

TYPICAL CARTRIDGES USED WITH THIS BODY

RPGC - ***	Page	1.06
RPGE - ***	Page	1.08
RDFA - ***	Page	1.10
RQGB - ***	Page	1.12
Instructions for ordering complete cartridge and body assemblies.	Page	viii
Pressure ratings, material specifications.	Page	11.02
SAE Specifications.	Page	11.03

Mounting Hole Dimensions	*Gauge Port*	ALUMINIUM		SG IRON	
		Model Code	*List Price*	*Model Code*	*List Price*
Inch	.25 NPTF	**YCQ**		**YCQ/S**	
Metric	.25 BSPP	**YCQ/M**		**YCQ/T**	

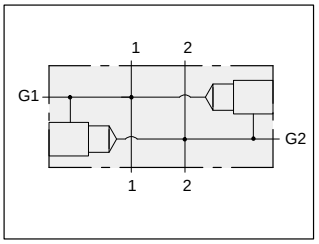

Two cavity 1.25” SAE Code 62 flange port body with gauge ports for cross–port relief applications.

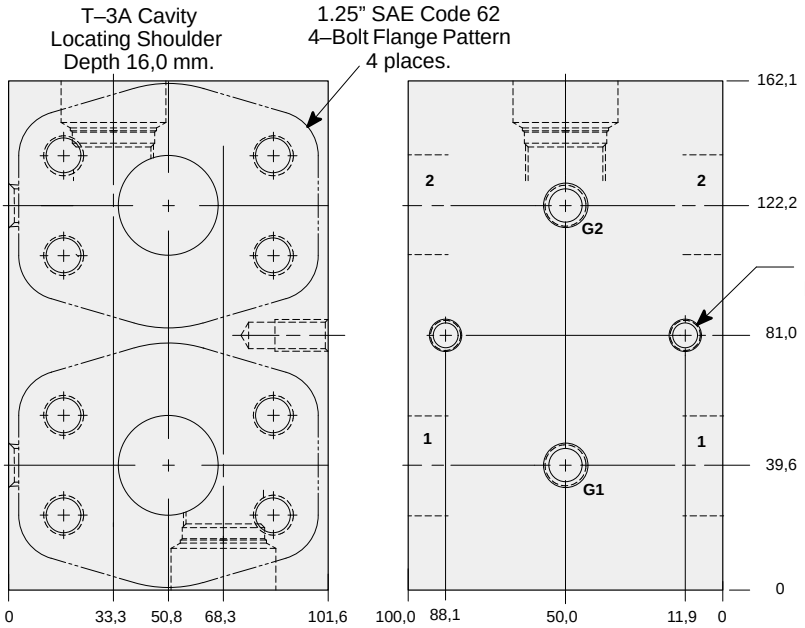

TYPICAL CARTRIDGES USED WITH THIS BODY

RPGC - ***	Page	1.06
RPGE - ***	Page	1.08
RDFA - ***	Page	1.10
RQGB - ***	Page	1.12
Instructions for ordering complete cartridge and body assemblies.	Page	viii
Pressure ratings, material specifications.	Page	11.02
SAE Specifications.	Page	11.03

Mounting Hole Dimensions	*Gauge Port*	ALUMINIUM		SG IRON	
		Model Code	*List Price*	*Model Code*	*List Price*
Inch	.25 NPTF	**YC5**		**YC5/S**	
Metric	.25 BSPP	**YC5/M**		**YC5/T**	

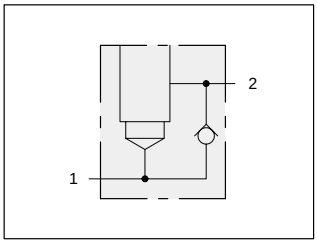

TYPICAL CARTRIDGES USED WITH THIS BODY

RPGC - ***	Page	1.06
RPGE - ***	Page	1.08
RDFA - ***	Page	1.10
RQGB - ***	Page	1.12
RPGD - ***	Page	1.14

Cartridge seal type determines check valve seal type.

Instructions for ordering complete cartridge and body assemblies. Page viii

Pressure ratings, material specifications. Page 11.02

Body with reverse free flow check.

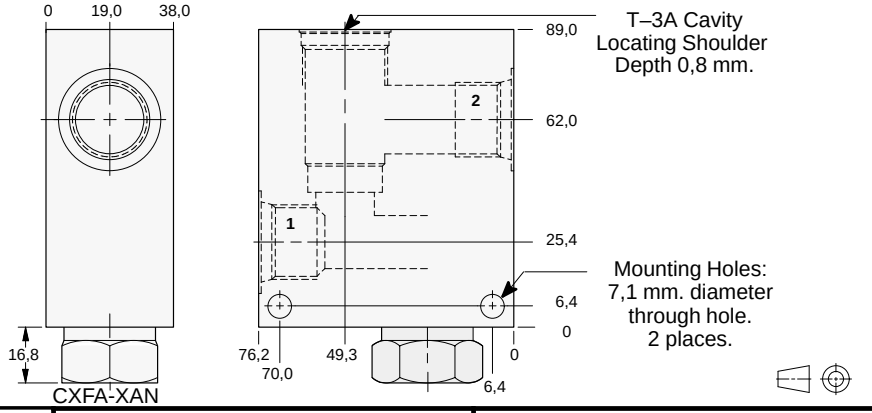

Ports 1 & 2	ALUMINIUM		SG IRON	
	Model Code	*List Price*	*Model Code*	*List Price*
.375 NPTF	**CNB**		**CNB/S**	
.50 NPTF	**CNC**		**CNC/S**	
.75 NPTF	**CND**		**CND/S**	
SAE-6	**CNI**		**CNI/S**	
SAE-8	**CNJ**		**CNJ/S**	
SAE-10	**CNK**		**CNK/S**	
.375 BSPP	**CNU**		**CNU/S**	
.50 BSPP	**CNV**		**CNV/S**	
.75 BSPP	**CNW**		**CNW/S**	

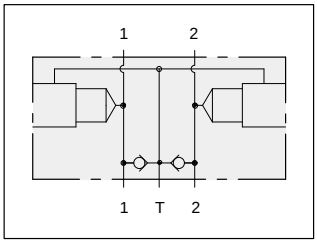

TYPICAL CARTRIDGES USED WITH THIS BODY

RPGC - ***	Page	1.06
RPGE - ***	Page	1.08
RDFA - ***	Page	1.10
RQGB - ***	Page	1.12

Cartridge seal type determines check valve seal type.

Instructions for ordering complete cartridge and body assemblies. Page viii

Pressure ratings, material specifications. Page 11.02

Two cavity body with make–up checks for cross–port relief applications.

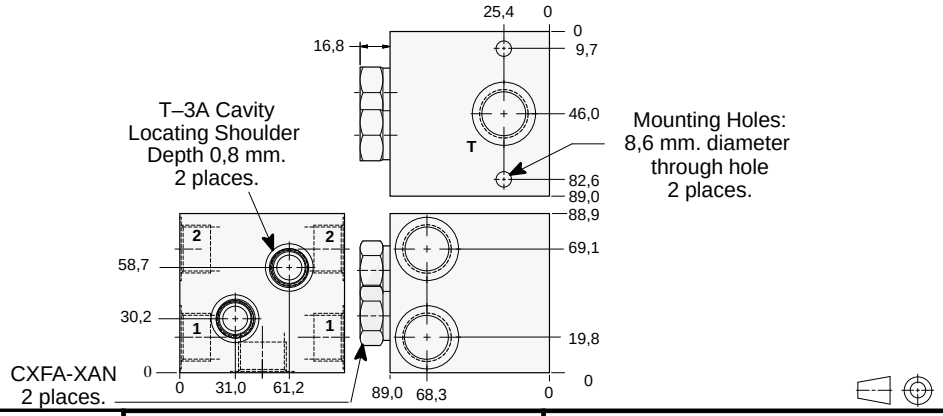

Ports 1, 2 & T	ALUMINIUM		SG IRON	
	Model Code	*List Price*	*Model Code*	*List Price*
.375 NPTF	**CMB**		**CMB/S**	
.50 NPTF	**CMC**		**CMC/S**	
.75 NPTF	**CMD**		**CMD/S**	
SAE-8	**CMJ**		**CMJ/S**	
SAE-10	**CMK**		**CMK/S**	
SAE-12	**CML**		**CML/S**	
.375 BSPP	**CMU**		**CMU/S**	
.50 BSPP	**CMV**		**CMV/S**	
.75 BSPP	**CMW**		**CMW/S**	

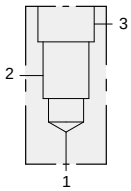

90 degree body.

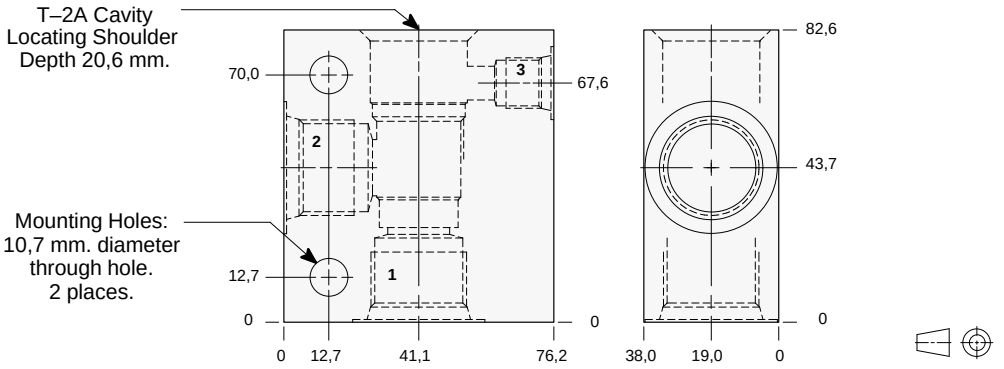

TYPICAL CARTRIDGES USED WITH THIS BODY

RVEA - *** Page 1.18
RSFC - *** Page 2.06
SQFB - *** Page 2.08
RSFE - *** Page 2.10
SCEA - *** Page 2.12
PBFB - *** Page 3.06
PBFC - *** Page 3.08
CBEA - *** Page 4.10
CBEG - *** Page 4.12
CBEH - *** Page 4.14
CKEB - *** Page 4.14
LOFC - *** Page 9.08
LKFC - *** Page 9.10
LPFC - *** Page 9.12
LRFC - *** Page 9.14
COFA - *** Page 10.12

Instructions for ordering complete cartridge and body assemblies. Page viii

Pressure ratings, material specifications. Page 11.02

Ports 1 & 2	*Port 3*	ALUMINIUM		SG IRON	
		Model Code	*List Price*	*Model Code*	*List Price*
.25 NPTF	.25 NPTF	**BCA**		**BCA/S**	
.375 NPTF	.25 NPTF	**BCB**		**BCB/S**	
.50 NPTF	.25 NPTF	**BCC**		**BCC/S**	
.75 NPTF	.25 NPTF	**BCD**		**BCD/S**	
SAE-6	SAE-6	**BCI**		**BCI/S**	
SAE-8	SAE-6	**BCJ**		**BCJ/S**	
SAE-10	SAE-6	**BCK**		**BCK/S**	
SAE-12	SAE-6	**BCL**		**BCL/S**	
.25 BSPP	.25 BSPP	**BCT**		**BCT/S**	
.375 BSPP	.25 BSPP	**BCU**		**BCU/S**	
.50 BSPP	.25 BSPP	**BCV**		**BCV/S**	
.75 BSPP	.25 BSPP	**BCW**		**BCW/S**	

90 degree body with high capacity port 3.

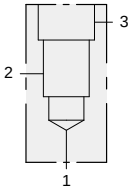

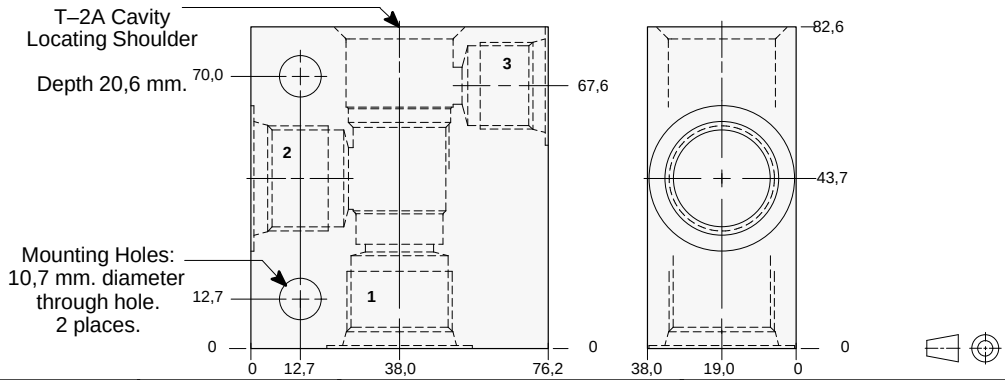

TYPICAL CARTRIDGES USED WITH THIS BODY

PPFB - *** Page 3.10
PPFC - *** Page 3.12
FRDA - *** Page 6.02
DPCA - *** Page 8.06
DPCB - *** Page 8.07
DPCC - *** Page 8.08
DPCD - *** Page 8.09

Instructions for ordering complete cartridge and body assemblies. Page viii

Pressure ratings, material specifications. Page 11.02

Ports 1 & 2	*Port 3*	ALUMINIUM		SG IRON	
		Model Code	*List Price*	*Model Code*	*List Price*
.375 NPTF	.375 NPTF	**BAB**		**BAB/S**	
.50 NPTF	.50 NPTF	**BAC**		**BAC/S**	
.75 NPTF	.50 NPTF	**BAD**		**BAD/S**	
SAE-8	SAE-8	**BAJ**		**BAJ/S**	
SAE-10	SAE-10	**BAK**		**BAK/S**	
SAE-12	SAE-10	**BAL**		**BAL/S**	
.375 BSPP	.375 BSPP	**BAU**		**BAU/S**	
.50 BSPP	.50 BSPP	**BAV**		**BAV/S**	
.75 BSPP	.50 BSPP	**BAW**		**BAW/S**	

LINE MOUNT BODIES

- Aluminium rated to 210 bar and SG Iron rated to 350 bar.

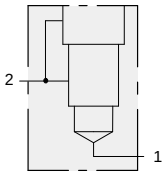

Body with port 3 connected to port 2.

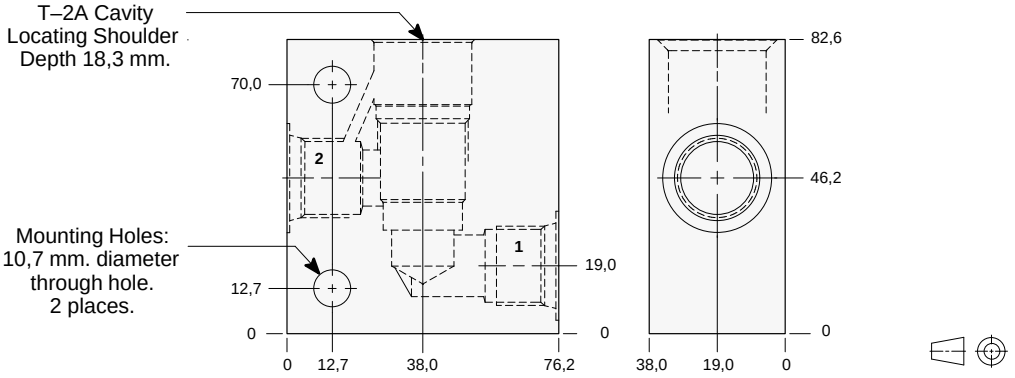

TYPICAL CARTRIDGES USED WITH THIS BODY

CBEA - *** Page 4.10
CBEG - *** Page 4.12
CBEH - *** Page 4.14

Instructions for ordering complete cartridge and body assemblies. Page viii

Pressure ratings, material specifications. Page 11.02

All Ports	ALUMINIUM		SG IRON	
	Model Code	*List Price*	*Model Code*	*List Price*
.25 NPTF	**BDA**		**BDA/S**	
.375 NPTF	**BDB**		**BDB/S**	
.50 NPTF	**BDC**		**BDC/S**	
.75 NPTF	**BDD**		**BDD/S**	
SAE-6	**BDI**		**BDI/S**	
SAE-8	**BDJ**		**BDJ/S**	
SAE-10	**BDK**		**BDK/S**	
.25 BSPP	**BDT**		**BDT/S**	
.375 BSPP	**BDU**		**BDU/S**	
.50 BSPP	**BDV**		**BDV/S**	
.75 BSPP	**BDW**		**BDW/S**	

LINE MOUNT BODIES

- Aluminium rated to 210 bar and SG Iron rated to 350 bar.

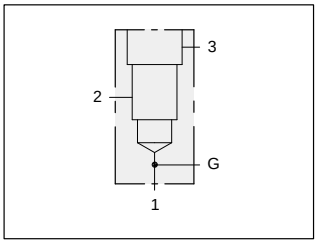

90 degree body with gauge port.

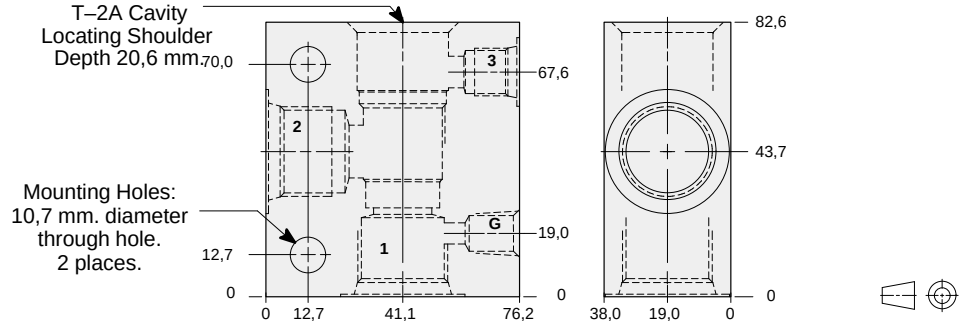

TYPICAL CARTRIDGES USED WITH THIS BODY

RVEA - *** Page 1.18
RSFC - *** Page 2.06
SQFB - *** Page 2.08
RSFE - *** Page 2.10
SCEA - *** Page 2.12
PBFB - *** Page 3.06
PBFC - *** Page 3.08
LOFC - *** Page 9.08
LKFC - *** Page 9.10
LPFC - *** Page 9.12
LRFC - *** Page 9.14
COFA - *** Page 10.12

Instructions for ordering complete cartridge and body assemblies. Page viii

Pressure ratings, material specifications. Page 11.02

Ports 1 & 2	*Port 3*	*Gauge Port*	ALUMINIUM		SG IRON	
			Model Code	*List Price*	*Model Code*	*List Price*
.25 NPTF	.25 NPTF	.25 NPTF	**BFA**		**BFA/S**	
.375 NPTF	.25 NPTF	.25 NPTF	**BFB**		**BFB/S**	
.50 NPTF	.25 NPTF	.25 NPTF	**BFC**		**BFC/S**	
.75 NPTF	.25 NPTF	.25 NPTF	**BFD**		**BFD/S**	
SAE-6	SAE-6	.25 NPTF	**BFI**		**BFI/S**	
SAE-8	SAE-6	.25 NPTF	**BFJ**		**BFJ/S**	
SAE-10	SAE-6	.25 NPTF	**BFK**		**BFK/S**	
SAE-12	SAE-6	.25 NPTF	**BFL**		**BFL/S**	
.25 BSPP	.25 BSPP	.25 BSPP	**BFT**		**BFT/S**	
.375 BSPP	.25 BSPP	.25 BSPP	**BFU**		**BFU/S**	
.50 BSPP	.25 BSPP	.25 BSPP	**BFV**		**BFV/S**	
.75 BSPP	.25 BSPP	.25 BSPP	**BFW**		**BFW/S**	

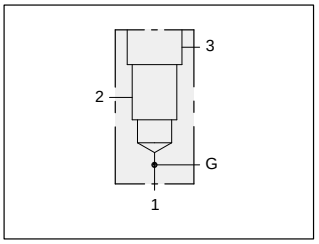

90 degree body with high capacity port 3 and gauge port.

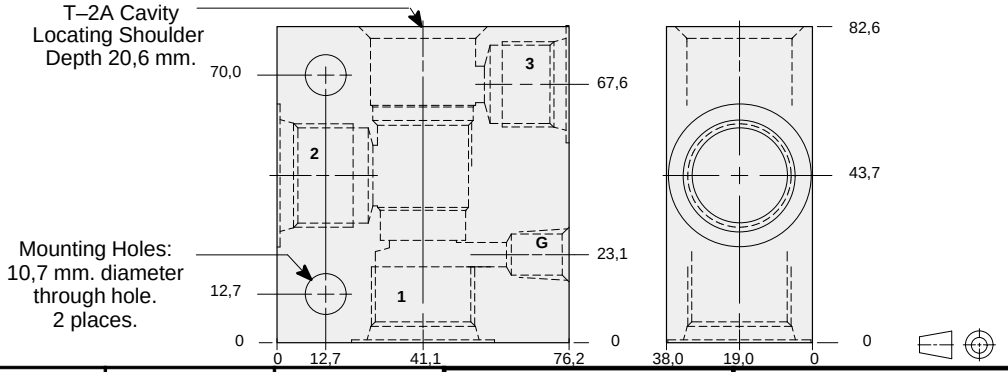

TYPICAL CARTRIDGES USED WITH THIS BODY

PPFB - *** Page 3.10
PPFC - *** Page 3.12
DPCA - *** Page 8.06
DPCB - *** Page 8.07
DPCC - *** Page 8.08
DPCD - *** Page 8.09

Instructions for ordering complete cartridge and body assemblies. Page viii

Pressure ratings, material specifications. Page 11.02

Ports 1 & 2	*Port 3*	*Gauge Port*	ALUMINIUM		SG IRON	
			Model Code	*List Price*	*Model Code*	*List Price*
.375 NPTF	.375 NPTF	.25 NPTF	**BLB**		**BLB/S**	
.50 NPTF	.50 NPTF	.25 NPTF	**BLC**		**BLC/S**	
.75 NPTF	.50 NPTF	.25 NPTF	**BLD**		**BLD/S**	
SAE-6	SAE-6	.25 NPTF	**BLI**		**BLI/S**	
SAE-8	SAE-8	.25 NPTF	**BLJ**		**BLJ/S**	
SAE-10	SAE-10	.25 NPTF	**BLK**		**BLK/S**	
SAE-12	SAE-10	.25 NPTF	**BLL**		**BLL/S**	
.375 BSPP	.375 BSPP	.25 BSPP	**BLU**		**BLU/S**	
.50 BSPP	.50 BSPP	.25 BSPP	**BLV**		**BLV/S**	
.75 BSPP	.50 BSPP	.25 BSPP	**BLW**		**BLW/S**	

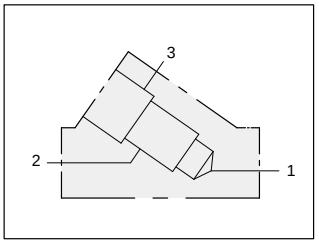

TYPICAL CARTRIDGES USED WITH THIS BODY

RVEA	- ***	Page	1.18
RSFC	- ***	Page	2.06
SQFB	- ***	Page	2.08
RSFE	- ***	Page	2.10
SCEA	- ***	Page	2.12
PBFB	- ***	Page	3.06
PBFC	- ***	Page	3.08
CBEA	- ***	Page	4.10
CBEG	- ***	Page	4.12
CBEH	- ***	Page	4.14
CKEB	- ***	Page	4.14
LOFC	- ***	Page	9.08
LKFC	- ***	Page	9.10
LPFC	- ***	Page	9.12
LRFC	- ***	Page	9.14
COFA	- ***	Page	10.12

Instructions for ordering complete cartridge and body assemblies. Page viii

Pressure ratings, material specifications. Page 11.02

Inline body.

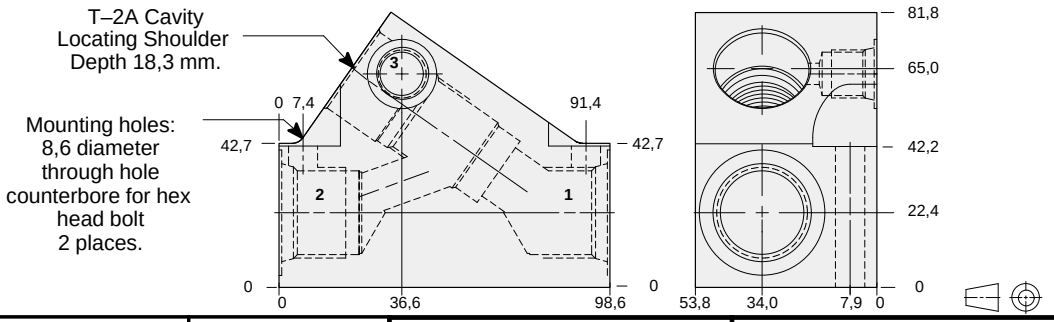

Ports 1 & 2	Port 3	ALUMINIUM		SG IRON	
		Model Code	List Price	Model Code	List Price
.25 NPTF	.25 NPTF	**BVA**		**BVA/S**	
.375 NPTF	.25 NPTF	**BVB**		**BVB/S**	
.50 NPTF	.25 NPTF	**BVC**		**BVC/S**	
.75 NPTF	.25 NPTF	**BVD**		**BVD/S**	
SAE-6	SAE-6	**BVI**		**BVI/S**	
SAE-8	SAE-6	**BVJ**		**BVJ/S**	
SAE-10	SAE-6	**BVK**		**BVK/S**	
SAE-12	SAE-6	**BVL**		**BVL/S**	
.25 BSPP	.25 BSPP	**BVT**		**BVT/S**	
.375 BSPP	.25 BSPP	**BVU**		**BVU/S**	
.50 BSPP	.25 BSPP	**BVV**		**BVV/S**	
.75 BSPP	.25 BSPP	**BVW**		**BVW/S**	

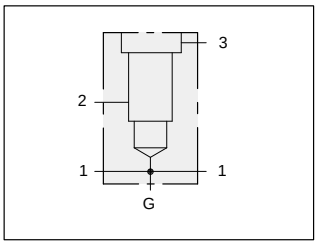

TYPICAL CARTRIDGES USED WITH THIS BODY

RVEA	- ***	Page	1.18
RSFC	- ***	Page	2.06
SQFB	- ***	Page	2.08
RSFE	- ***	Page	2.10
SCEA	- ***	Page	2.12
PBFB	- ***	Page	3.06
PBFC	- ***	Page	3.08

Instructions for ordering complete cartridge and body assemblies. Page viii

Pressure ratings, material specifications. Page 11.02

Through port body with gauge port.

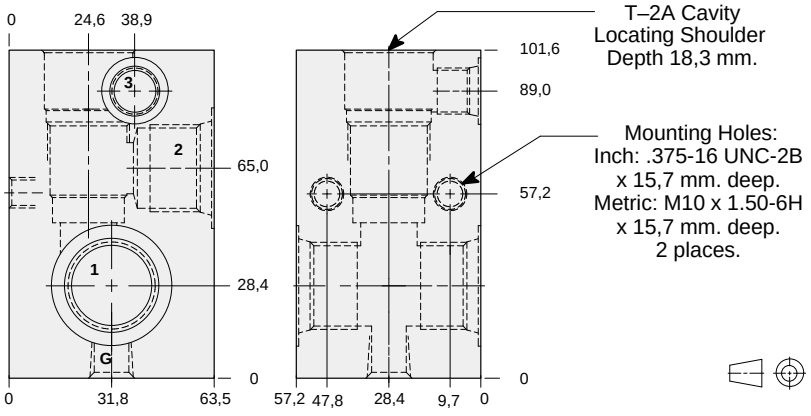

Mounting Hole Dimensions	Ports 1 & 2	Port 3	Gauge Port	ALUMINIUM		SG IRON	
				Model Code	List Price	Model Code	List Price
Inch	.375 NPTF	.25 NPTF	.25 NPTF	**BHB**		**BHB/S**	
Inch	.50 NPTF	.25 NPTF	.25 NPTF	**BHC**		**BHC/S**	
Inch	.75 NPTF	.25 NPTF	.25 NPTF	**BHD**		**BHD/S**	
Inch	SAE-8	SAE-6	.25 NPTF	**BHJ**		**BHJ/S**	
Inch	SAE-10	SAE-6	.25 NPTF	**BHK**		**BHK/S**	
Inch	SAE-12	SAE-6	.25 NPTF	**BHL**		**BHL/S**	
Metric	.375 BSPP	.25 BSPP	.25 BSPP	**BHU**		**BHU/S**	
Metric	.50 BSPP	.25 BSPP	.25 BSPP	**BHV**		**BHV/S**	
Metric	.75 BSPP	.25 BSPP	.25 BSPP	**BHW**		**BHW/S**	

LINE MOUNT BODIES

- Aluminium rated to 210 bar and SG Iron rated to 350 bar.

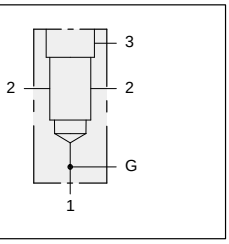

TYPICAL CARTRIDGES USED WITH THIS BODY

PBFB - *** Page 3.06
PBFC - *** Page 3.08

Instructions for ordering complete cartridge and body assemblies. Page viii

Pressure ratings, material specifications. Page 11.02

Through port body with gauge port.

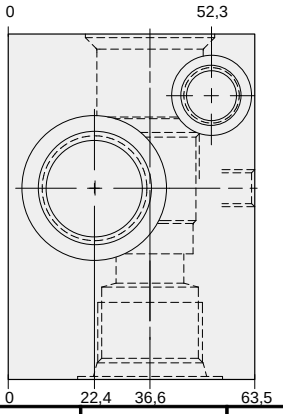

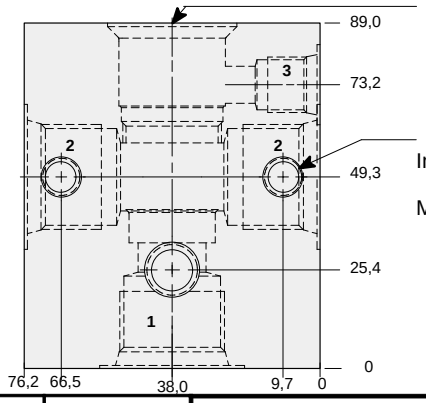

T–2A Cavity Locating Shoulder Depth 21,3 mm.

Mounting Holes: (opposite side) Inch: .375-16 UNC-2B x 15,7 mm. deep. Metric: M10 x 1.50-6H x 15,7 mm. deep. 2 places.

Mounting Hole Dimensions	*Ports 1 & 2*	*Port 3*	*Gauge Port*	ALUMINIUM		SG IRON	
				Model Code	*List Price*	*Model Code*	*List Price*
Inch	.375 NPTF	.25 NPTF	.25 NPTF	**WSE**		**WSE/S**	
Inch	.50 NPTF	.25 NPTF	.25 NPTF	**WSF**		**WSF/S**	
Inch	.75 NPTF	.25 NPTF	.25 NPTF	**WSG**		**WSG/S**	
Inch	SAE-8	SAE-6	.25 NPTF	**WSH**		**WSH/S**	
Inch	SAE-10	SAE-6	.25 NPTF	**WSI**		**WSI/S**	
Inch	SAE-12	SAE-6	.25 NPTF	**WSJ**		**WSJ/S**	
Metric	.375 BSPP	.25 BSPP	.25 BSPP	**WSK**		**WSK/S**	
Metric	.50 BSPP	.25 BSPP	.25 BSPP	**WSL**		**WSL/S**	
Metric	.75 BSPP	.25 BSPP	.25 BSPP	**WSM**		**WSM/S**	

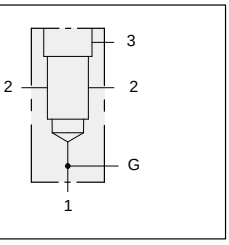

TYPICAL CARTRIDGES USED WITH THIS BODY

PBFB - *** Page 3.06
PBFC - *** Page 3.08
DPCA - *** Page 8.06
DPCB - *** Page 8.07
DPPC - *** Page 8.08
DPCD - *** Page 8.09

Instructions for ordering complete cartridge and body assemblies. Page viii

Pressure ratings, material specifications. Page 11.02

Through port body with high capacity port 3 and gauge port.

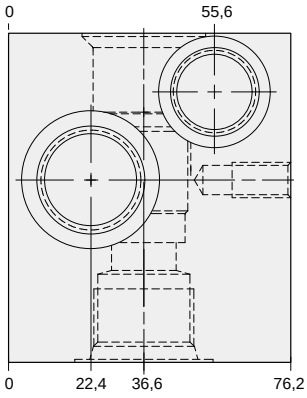

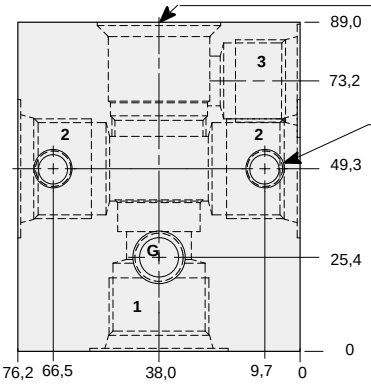

T–2A Cavity Locating Shoulder Depth 21,3 mm.

Mounting Holes: (opposite side) Inch: .375-16 UNC-2B x 15,7 mm. deep. Metric: M10 x 1.50-6H x 15,7 mm. deep. 2 places.

Mounting Hole Dimensions	*Ports 1 & 2*	*Port 3*	*Gauge Port*	ALUMINIUM		SG IRON	
				Model Code	*List Price*	*Model Code*	*List Price*
Inch	.375 NPTF	.375 NPTF	.25 NPTF	**WSN**		**WSN/S**	
Inch	.50 NPTF	.50 NPTF	.25 NPTF	**WSO**		**WSO/S**	
Inch	.75 NPTF	.50 NPTF	.25 NPTF	**WSP**		**WSP/S**	
Inch	SAE-8	SAE-8	.25 NPTF	**WSQ**		**WSQ/S**	
Inch	SAE-10	SAE-10	.25 NPTF	**WSR**		**WSR/S**	
Inch	SAE-12	SAE-10	.25 NPTF	**WSS**		**WSS/S**	
Metric	.375 BSPP	.375 BSPP	.25 BSPP	**WST**		**WST/S**	
Metric	.50 BSPP	.50 BSPP	.25 BSPP	**WSU**		**WSU/S**	
Metric	.75 BSPP	.50 BSPP	.25 BSPP	**WSV**		**WSV/S**	

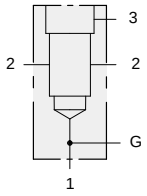

TYPICAL CARTRIDGES USED WITH THIS BODY

RVEA	- ***	Page	1.18
RSFC	- ***	Page	2.06
SQFB	- ***	Page	2.08
RSFE	- ***	Page	2.10
SCEA	- ***	Page	2.12

Cartridge seal type determines O–ring type.

Instructions for ordering complete cartridge and body assemblies. Page viii

Pressure ratings, material specifications. Page 11.02

SAE Specifications. Page 11.03

Sandwich mount through port 1.00” SAE Code 61 body with gauge port.

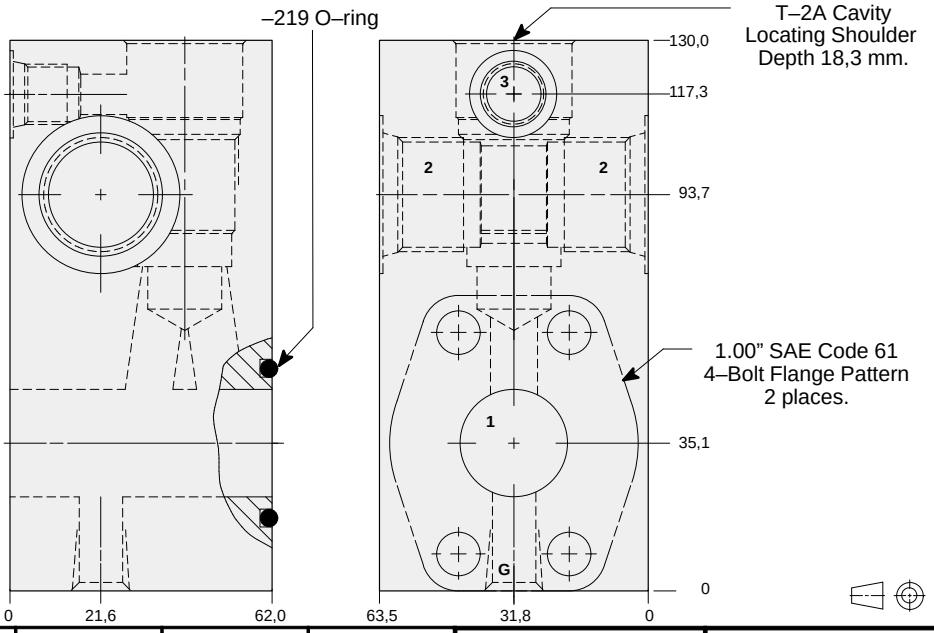

Mounting Hole Dimensions	*Port 2*	*Port 3*	*Gauge Port*	ALUMINIUM		SG IRON	
				Model Code	*List Price*	*Model Code*	*List Price*
Inch	.75 NPTF	.25 NPTF	.25 NPTF	**ZMN**		**ZMN/S**	
Inch	SAE-12	SAE-6	.25 NPTF	**ZMP**		**ZMP/S**	
Metric	.75 BSPP	.25 BSPP	.25 BSPP	**ZMR/M**		**ZMR/T**	

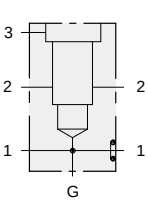

TYPICAL CARTRIDGES USED WITH THIS BODY

RVEA	- ***	Page	1.18
RSFC	- ***	Page	2.06
SQFB	- ***	Page	2.08
RSFE	- ***	Page	2.10
SCEA	- ***	Page	2.12

Cartridge seal type determines O–ring type.

Instructions for ordering complete cartridge and body assemblies. Page viii

Pressure ratings, material specifications. Page 11.02

SAE Specifications. Page 11.03

Sandwich mount through port 1.00” SAE Code 62 body with gauge port.

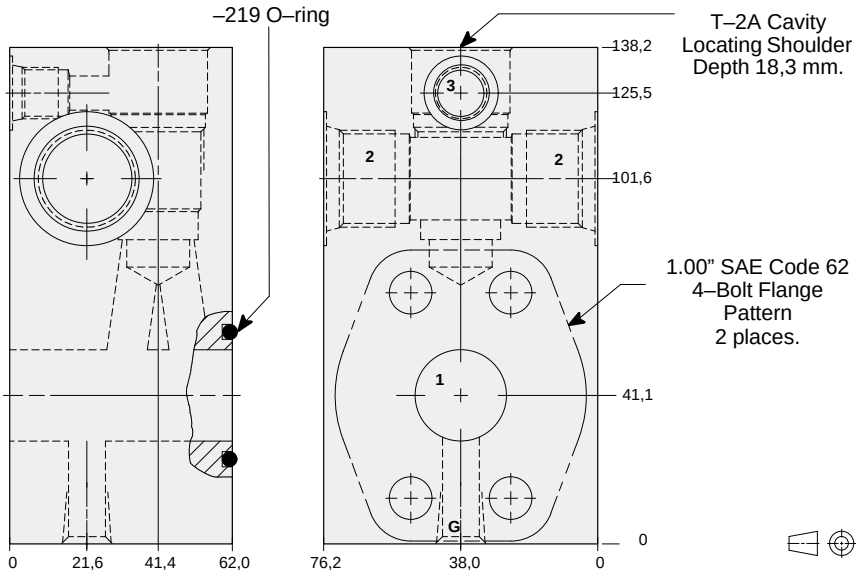

Mounting Hole Dimensions	*Port 2*	*Port 3*	*Gauge Port*	ALUMINIUM		SG IRON	
				Model Code	*List Price*	*Model Code*	*List Price*
Inch	SAE-12	SAE-6	.25 NPTF	**WYG**		**WYG/S**	
Inch	.75 NPTF	.25 NPTF	.25 NPTF	**WYH**		**WYH/S**	
Metric	.75 BSPP	.25 BSPP	.25 BSPP	**WYF/M**		**WYF/T**	

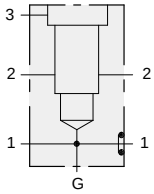

TYPICAL CARTRIDGES USED WITH THIS BODY

RVEA	- ***	Page	1.18
RSFC	- ***	Page	2.06
SQFB	- ***	Page	2.08
RSFE	- ***	Page	2.10
SCEA	- ***	Page	2.12

Cartridge seal type determines O–ring type.

Instructions for ordering complete cartridge and body assemblies. Page viii

Pressure ratings, material specifications. Page 11.02

SAE Specifications. Page 11.03

Flange mount through port 1.00” SAE Code 61 body with threaded outlet and gauge port.

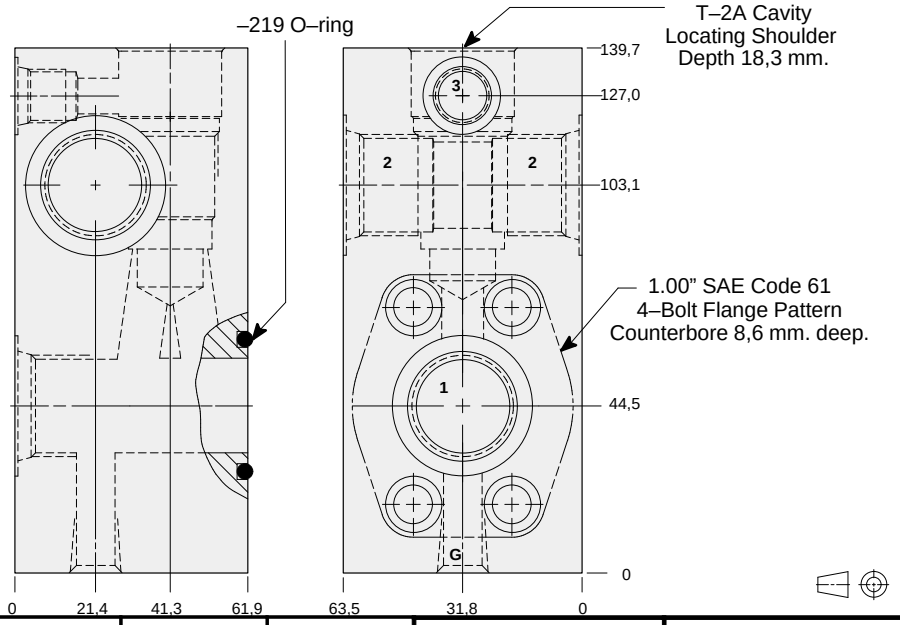

Mounting Hole Dimensions	*Ports 1 & 2*	*Port 3*	*Gauge Port*	ALUMINIUM		SG IRON	
				Model Code	*List Price*	*Model Code*	*List Price*
Inch	.75 NPTF	.25 NPTF	.25 NPTF	**WYW**		**WYW/S**	
Inch	SAE-12	SAE-6	.25 NPTF	**WYV**		**WYV/S**	
Metric	.75 BSPP	.25 BSPP	.25 BSPP	**WYU/M**		**WYU/T**	

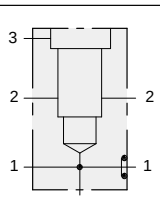

TYPICAL CARTRIDGES USED WITH THIS BODY

RVEA	- ***	Page	1.18
RSFC	- ***	Page	2.06
SQFB	- ***	Page	2.08

Cartridge seal type determines O–ring type.

Instructions for ordering complete cartridge and body assemblies. Page viii

Pressure ratings, material specifications. Page 11.02

SAE Specifications. Page 11.03

Flange mount through port 1.00” SAE Code 62 body with threaded outlet and gauge port.

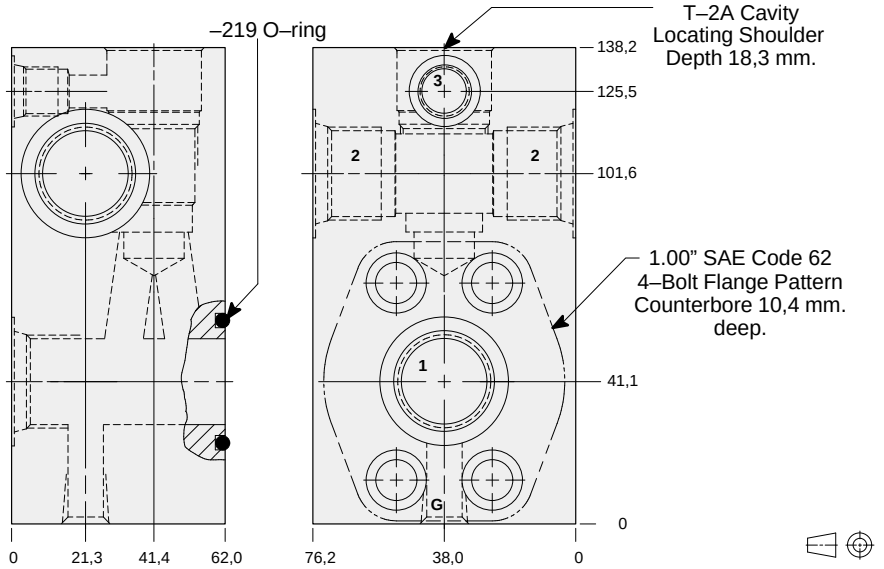

Mounting Hole Dimensions	*Ports 1 & 2*	*Port 3*	*Gauge Port*	ALUMINIUM		SG IRON	
				Model Code	*List Price*	*Model Code*	*List Price*
Inch	.75 NPTF	.25 NPTF	.25 NPTF	**WYE**		**WYE/S**	
Inch	SAE-12	SAE-6	.25 NPTF	**WYD**		**WYD/S**	
Metric	.75 BSPP	.25 BSPP	.25 BSPP	**WYC/M**		**WYC/T**	

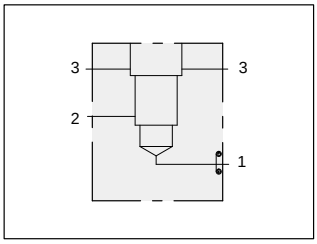

Direct mount .75” SAE Code 61 body with through pilot/drain port.

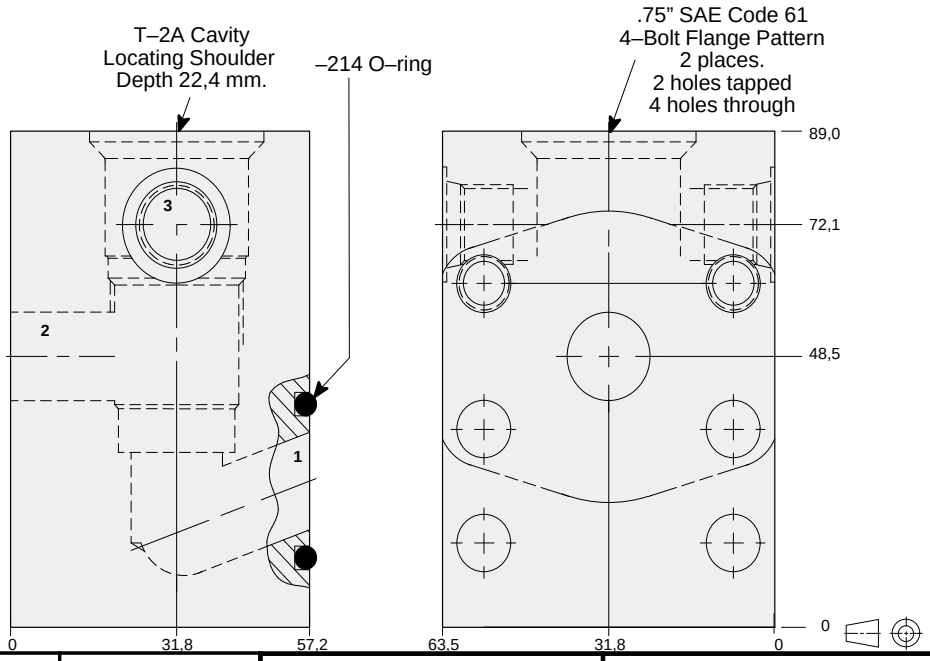

Mounting Hole Dimensions	*Port 3*	ALUMINIUM		SG IRON	
		Model Code	*List Price*	*Model Code*	*List Price*
Inch	SAE-6	**ZNV**		**ZNV/S**	
Metric	.25 BSPP	**ZNV/M**		**ZNV/T**	

TYPICAL CARTRIDGES USED WITH THIS BODY

RVEA	- ***	Page	1.18
RSFC	- ***	Page	2.06
SQFB	- ***	Page	2.08
RSFE	- ***	Page	2.10
SCEA	- ***	Page	2.12
CBEA	- ***	Page	4.10
CBEG	- ***	Page	4.12
CBEH	- ***	Page	4.14
CKEB	- ***	Page	4.14
LOFC	- ***	Page	9.08
LKFC	- ***	Page	9.10
LPFC	- ***	Page	9.12
LRFC	- ***	Page	9.14
COFA	- ***	Page	10.12

Cartridge seal type determines O–ring type.

Instructions for ordering complete cartridge and body assemblies. Page viii

Pressure ratings, material specifications. Page 11.02

SAE Specifications. Page 11.03

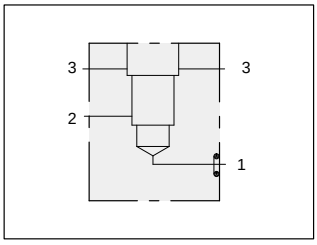

Direct mount .75” SAE Code 62 body with through pilot/drain port.

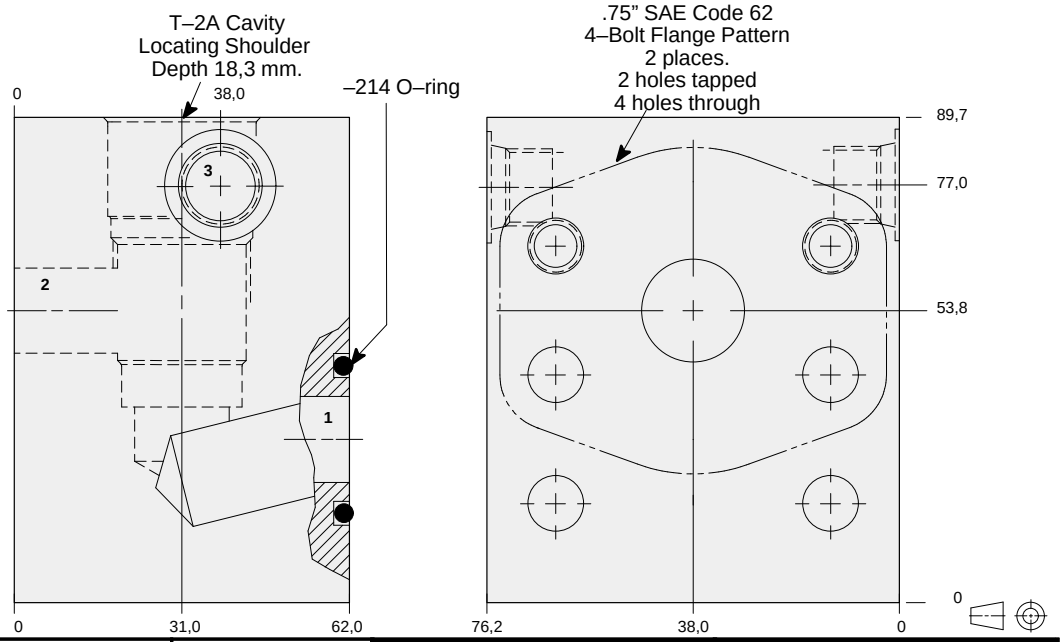

Mounting Hole Dimensions	*Port 3*	ALUMINIUM		SG IRON	
		Model Code	*List Price*	*Model Code*	*List Price*
Inch	SAE-6	**ZDS**		**ZDS/S**	
Metric	.25 BSPP	**ZDS/M**		**ZDS/T**	

TYPICAL CARTRIDGES USED WITH THIS BODY

RVEA	- ***	Page	1.18
RSFC	- ***	Page	2.06
SQFB	- ***	Page	2.08
RSFE	- ***	Page	2.10
SCEA	- ***	Page	2.12
CBEA	- ***	Page	4.10
CBEG	- ***	Page	4.12
CBEH	- ***	Page	4.14
CKEB	- ***	Page	4.14
LOFC	- ***	Page	9.08
LKFC	- ***	Page	9.10
LPFC	- ***	Page	9.12
LRFC	- ***	Page	9.14
COFA	- ***	Page	10.12

Cartridge seal type determines O–ring type.

Instructions for ordering complete cartridge and body assemblies. Page viii

Pressure ratings, material specifications. Page 11.02

SAE Specifications. Page 11.03

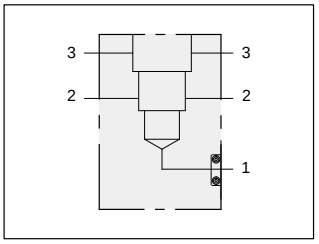

Flange mount through port .75” SAE Code 62 body with through pilot/drain port.

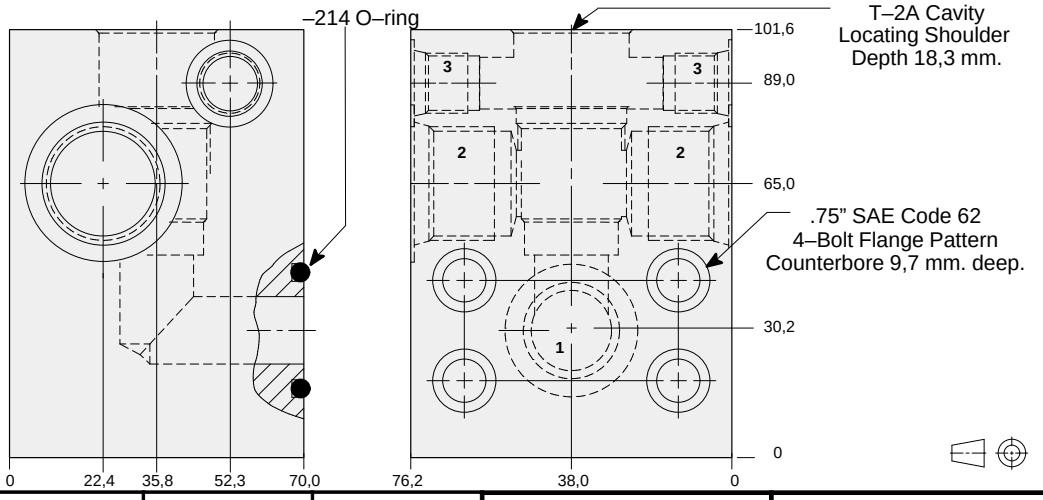

TYPICAL CARTRIDGES USED WITH THIS BODY

RVEA - *** Page 1.18
RSFC - *** Page 2.06
SQFB - *** Page 2.08
RSFE - *** Page 2.10
SCEA - *** Page 2.12

Cartridge seal type determines O–ring type.

Instructions for ordering complete cartridge and body assemblies. Page iii

Pressure ratings, material specifications. Page 11.02

SAE Specifications. Page NO TAG

Mounting Hole Dimensions	*Port 2*	*Port 3*	ALUMINIUM		SG IRON	
			Model Code	*List Price*	*Model Code*	*List Price*
Inch	.50 NPTF	.25 NPTF	**WRA**		**WRA/S**	
Inch	.75 NPTF	.25 NPTF	**WRB**		**WRB/S**	
Inch	SAE-10	SAE-6	**WRC**		**WRC/S**	
Inch	SAE-12	SAE-6	**WRD**		**WRD/S**	
Metric	.50 BSPP	.25 BSPP	**WRE/M**		**WRE/T**	
Metric	.75 BSPP	.25 BSPP	**WRF/M**		**WRF/T**	

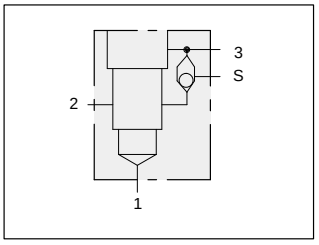

90 degree body with shuttle.

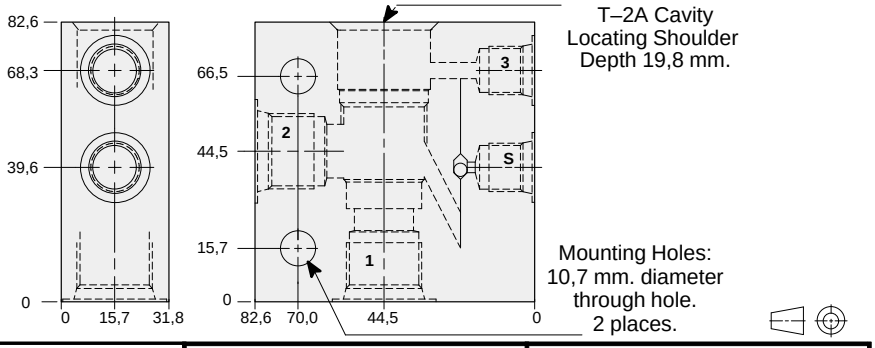

TYPICAL CARTRIDGES USED WITH THIS BODY

CBEA - *** Page 4.10
CBEG - *** Page 4.12
CBEH - *** Page 4.14
CKEB - *** Page 4.14

Instructions for ordering complete cartridge and body assemblies. Page iii

Pressure ratings, material specifications. Page 11.02

Ports 1 & 2	*Ports 3 & S*	ALUMINIUM		SG IRON	
		Model Code	*List Price*	*Model Code*	*List Price*
.25 NPTF	.25 NPTF	**BGA**		**BGA/S**	
.375 NPTF	.25 NPTF	**BGB**		**BGB/S**	
.50 NPTF	.25 NPTF	**BGC**		**BGC/S**	
.75 NPTF	.25 NPTF	**BGD**		**BGB/S**	
SAE-6	SAE-6	**BGI**		**BGI/S**	
SAE-8	SAE-6	**BGJ**		**BGJ/S**	
SAE-10	SAE-6	**BGK**		**BGK/S**	
.25 BSPP	.25 BSPP	**BGT**		**BGT/S**	
.375 BSPP	.25 BSPP	**BGU**		**BGU/S**	
.50 BSPP	.25 BSPP	**BGV**		**BGV/S**	
.75 BSPP	.25 BSPP	**BGW**		**BGW/S**	

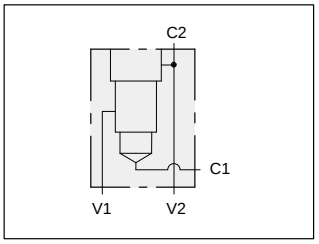

Nipple mount body for load control applications.

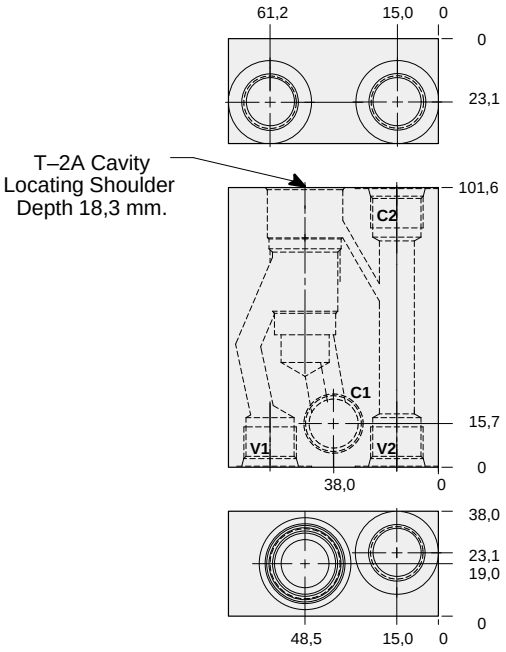

TYPICAL CARTRIDGES USED WITH THIS BODY

CBEA	- ***	Page	4.10
CBEG	- ***	Page	4.12
CBEH	- ***	Page	4.14
CKEB	- ***	Page	4.14

Instructions for ordering complete cartridge and body assemblies. Page viii

Pressure ratings, material specifications. Page 11.02

All Ports	ALUMINIUM		SG IRON	
	Model Code	*List Price*	*Model Code*	*List Price*
.50 NPTF	**ZTX**		**ZTX/S**	
SAE-8	**ZRM**		**ZRM/S**	

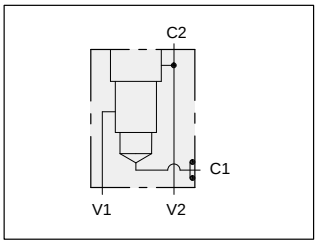

Gasket mount body for load control applications.

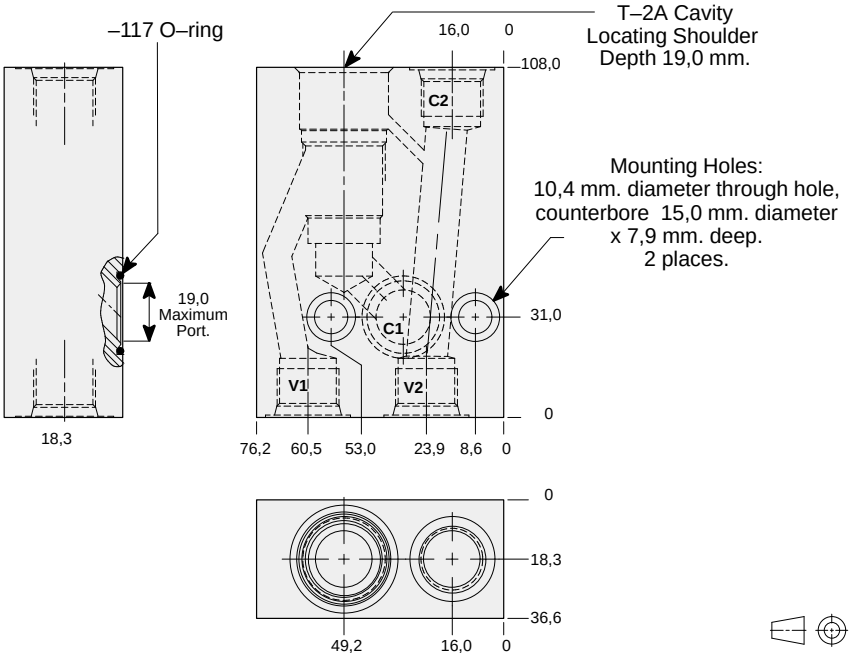

TYPICAL CARTRIDGES USED WITH THIS BODY

CBEA	- ***	Page	4.10
CBEG	- ***	Page	4.12
CBEH	- ***	Page	4.14
CKEB	- ***	Page	4.14

Cartridge seal type determines O–ring type.

Instructions for ordering complete cartridge and body assemblies. Page viii

Pressure ratings, material specifications. Page 11.02

Ports C2, V1, & V2	ALUMINIUM		SG IRON	
	Model Code	*List Price*	*Model Code*	*List Price*
.50 NPTF	**ZTF**		**ZTF/S**	
SAE-8	**ZTG**		**ZTG/S**	
.50 BSPP	**ZTH**		**ZTH/S**	

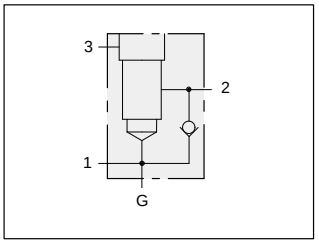

Body with reverse free flow check and gauge port for reducing and reducing/relieving applications.

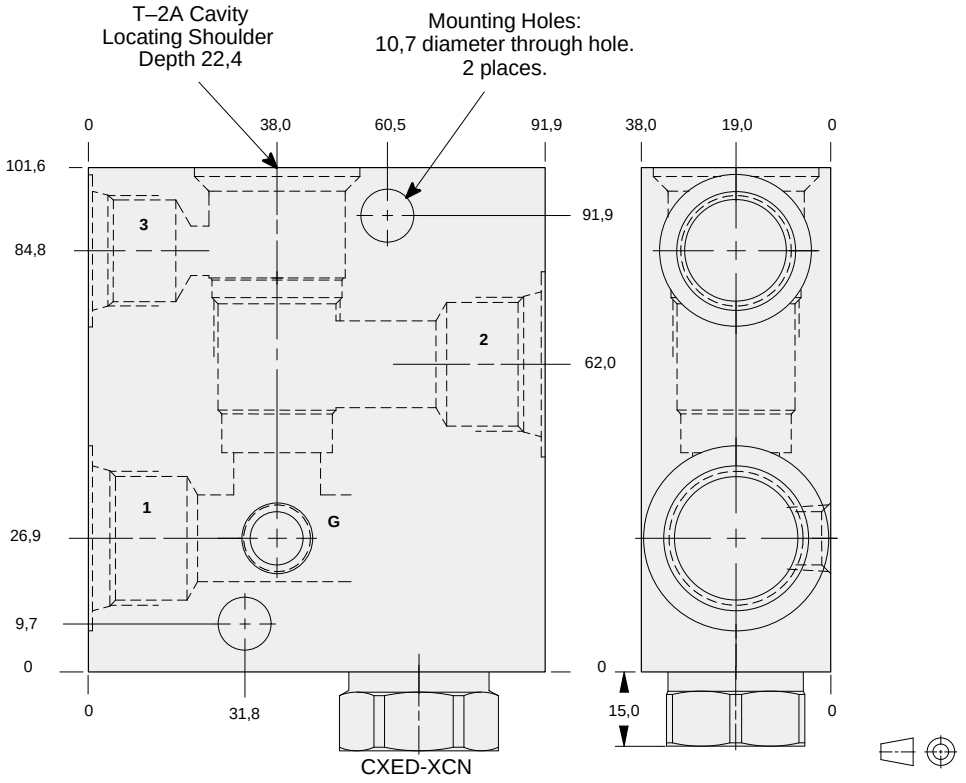

TYPICAL CARTRIDGES USED WITH THIS BODY

PBFB - *** Page 3.06
PBFC - *** Page 3.08
PPFB - *** Page 3.10
PPFC - *** Page 3.12

Cartridge seal type determines check valve seal type.

Instructions for ordering complete cartridge and body assemblies. Page viii

Pressure ratings, material specifications. Page 11.02

Ports 1 & 2	*Port 3*	*Gauge Port*	ALUMINIUM		SG IRON	
			Model Code	*List Price*	*Model Code*	*List Price*
.25 NPTF	.25 NPTF	.25 NPTF	**B2A**		**B2A/S**	
.375 NPTF	.25 NPTF	.25 NPTF	**B2B**		**B2B/S**	
.50 NPTF	.25 NPTF	.25 NPTF	**B2C**		**B2C/S**	
.75 NPTF	.25 NPTF	.25 NPTF	**B2D**		**B2D/S**	
SAE-6	SAE-6	.25 NPTF	**B2I**		**B2I/S**	
SAE-8	SAE-6	.25 NPTF	**B2J**		**B2J/S**	
SAE-10	SAE-6	.25 NPTF	**B2K**		**B2K/S**	
.375 BSPP	.25 BSPP	.25 BSPP	**B2U**		**B2U/S**	
.50 BSPP	.25 BSPP	.25 BSPP	**B2V**		**B2V/S**	
.75 BSPP	.25 BSPP	.25 BSPP	**B2W**		**B2W/S**	
.375 NPTF	.375 NPTF	.25 NPTF	**B4B**		**B4B/S**	
.50 NPTF	.50 NPTF	.25 NPTF	**B4C**		**B4C/S**	
.75 NPTF	.50 NPTF	.25 NPTF	**B4D**		**B4D/S**	
SAE-8	SAE-8	.25 NPTF	**B4J**		**B4J/S**	
SAE-10	SAE-10	.25 NPTF	**B4K**		**B4K/S**	
SAE-12	SAE-10	.25 NPTF	**B4L**		**B4L/S**	
.375 BSPP	.375 BSPP	.25 BSPP	**B4U**		**B4U/S**	
.50 BSPP	.50 BSPP	.25 BSPP	**B4V**		**B4V/S**	
.75 BSPP	.50 BSPP	.25 BSPP	**B4W**		**B4W/S**	

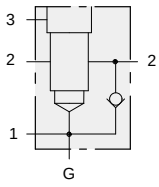

Through port body with reverse free flow check and gauge port for reducing applications.

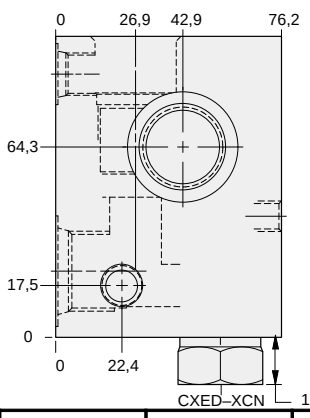

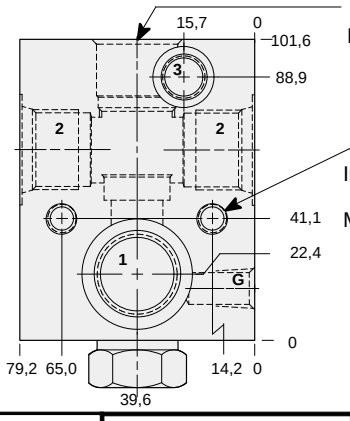

T–2A Cavity Locating Shoulder Depth 19,0 mm.

Mounting Holes: (opposite side) Inch: .375-16 UNC-2B x 15,7 mm. deep. Metric: M10 x 1.50-6H x 15,7 mm. deep. 2 places.

TYPICAL CARTRIDGES USED WITH THIS BODY

PBFB - *** Page 3.06
PBFC - *** Page 3.08

Cartridge seal type determines check valve seal type.

Instructions for ordering complete cartridge and body assemblies. Page viii

Pressure ratings, material specifications. Page 11.02

Mounting Hole Dimensions	*Ports 1 & 2*	*Port 3*	*Gauge Port*	ALUMINIUM		SG IRON	
				Model Code	*List Price*	*Model Code*	*List Price*
Inch	.375 NPTF	.25 NPTF	.25 NPTF	**B3B**		**B3B/S**	
Inch	.50 NPTF	.25 NPTF	.25 NPTF	**B3C**		**B3C/S**	
Inch	.75 NPTF	.25 NPTF	.25 NPTF	**B3D**		**B3D/S**	
Inch	SAE-8	SAE-6	.25 NPTF	**B3J**		**B3J/S**	
Inch	SAE-10	SAE-6	.25 NPTF	**B3K**		**B3K/S**	
Inch	SAE-12	SAE-6	.25 NPTF	**B3L**		**B3L/S**	
Metric	.375 BSPP	.25 BSPP	.25 BSPP	**B3U**		**B3U/S**	
Metric	.50 BSPP	.25 BSPP	.25 BSPP	**B3V**		**B3V/S**	
Metric	.75 BSPP	.25 BSPP	.25 BSPP	**B3W**		**B3W/S**	

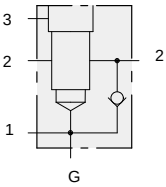

Through port body with high capacity port 3.

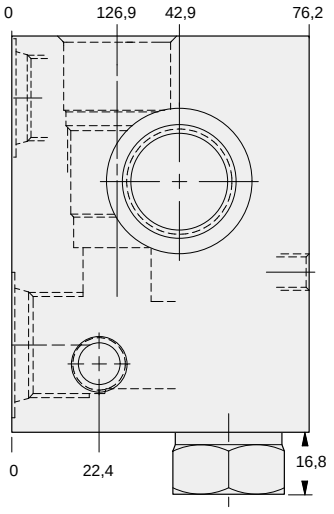

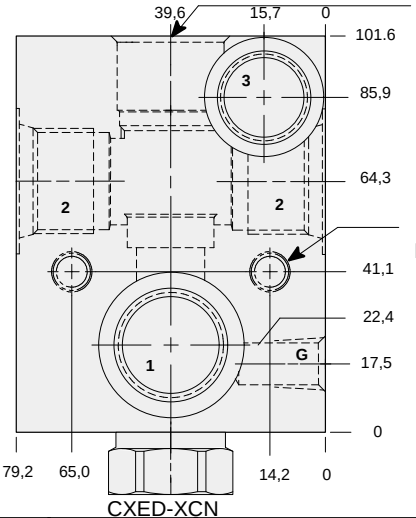

T–2A Cavity Locating Shoulder Depth 19,0

Mounting Holes: (opposite side) Inch: .375-16 UNC-2B X 15,7 deep. Metric: M10 x 1.50-6H x 15,7 deep. 2 places.

TYPICAL CARTRIDGES USED WITH THIS BODY

PBFB - *** Page 3.06
PBFC - *** Page 3.08

Cartridge seal type determines check valve seal type.

Instructions for ordering complete cartridge and body assemblies. Page viii

Pressure ratings, material specifications. Page 11.02

Mounting Hole Dimensions	*Ports 1 & 2*	*Port 3*	*Gauge Port*	ALUMINIUM		SG IRON	
				Model Code	*List Price*	*Model Code*	*List Price*
Inch	.50 NPTF	.50 NPTF	.25 NPTF	**B5C**		**B5C/S**	
Inch	.75 NPTF	.50 NPTF	.25 NPTF	**B5D**		**B5D/S**	
Inch	SAE-10	SAE-10	.25 NPTF	**B5K**		**B5K/S**	
Inch	SAE-12	SAE-10	.25 NPTF	**B5L**		**B5L/S**	
Metric	.50 BSPP	.50 BSPP	.25 BSPP	**B5V**		**B5V/S**	
Metric	.75 BSPP	.50 BSPP	.25 BSPP	**B5W**		**B5W/S**	

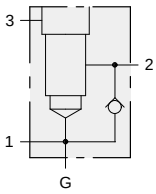

Body with reverse free flow check and gauge port.

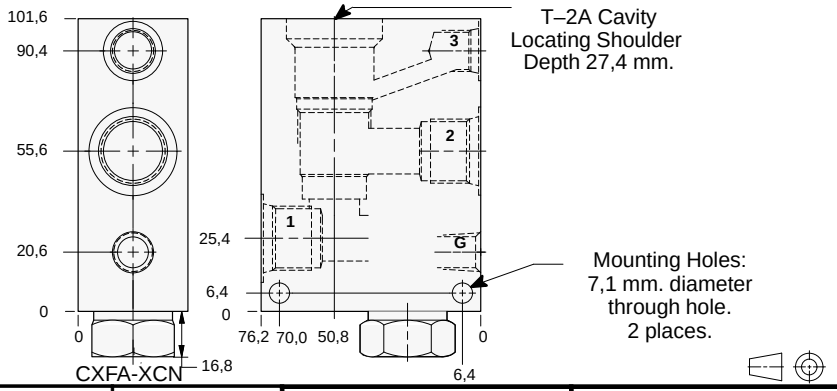

TYPICAL CARTRIDGES USED WITH THIS BODY

RVEA - *** Page 1.18
RSFC - *** Page 2.06
SQFB - *** Page 2.08
RSFE - *** Page 2.10

Cartridge seal type determines check valve seal type.

Instructions for ordering complete cartridge and body assemblies. Page viii

Pressure ratings, material specifications. Page 11.02

Ports 1 & 2	*Port 3*	*Gauge Port*	ALUMINIUM		SG IRON	
			Model Code	*List Price*	*Model Code*	*List Price*
.25 NPTF	.25 NPTF	.25 NPTF	**B6A**		**B6A/S**	
.375 NPTF	.25 NPTF	.25 NPTF	**B6B**		**B6B/S**	
.50 NPTF	.25 NPTF	.25 NPTF	**B6C**		**B6C/S**	
.75 NPTF	.25 NPTF	.25 NPTF	**B6D**		**B6D/S**	
SAE-6	SAE-6	.25 NPTF	**B6I**		**B6I/S**	
SAE-8	SAE-6	.25 NPTF	**B6J**		**B6J/S**	
SAE-10	SAE-6	.25 NPTF	**B6K**		**B6K/S**	
.375 BSPP	.25 BSPP	.25 BSPP	**B6U**		**B6U/S**	
.50 BSPP	.25 BSPP	.25 BSPP	**B6V**		**B6V/S**	
.75 BSPP	.25 BSPP	.25 BSPP	**B6W**		**B6W/S**	

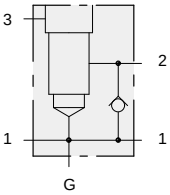

Through port body with reverse free flow check and gauge port.

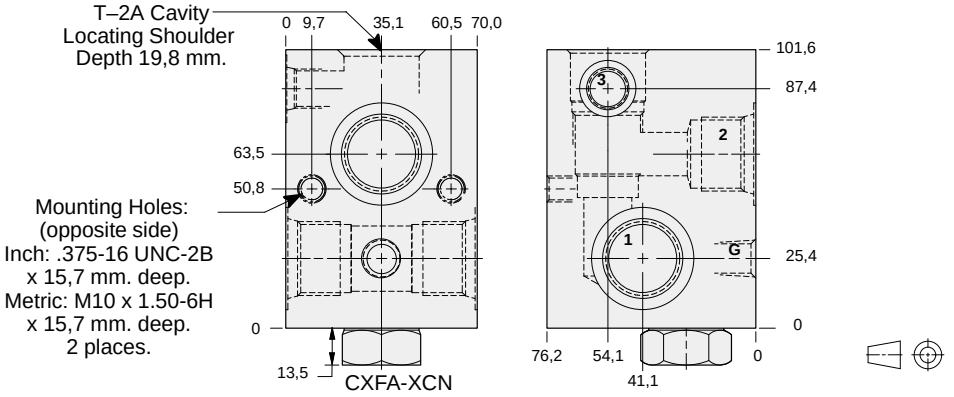

TYPICAL CARTRIDGES USED WITH THIS BODY

RVEA - *** Page 1.18
RSFC - *** Page 2.06
SQFB - *** Page 2.08
RSFE - *** Page 2.10

Cartridge seal type determines check valve seal type.

Instructions for ordering complete cartridge and body assemblies. Page viii

Pressure ratings, material specifications. Page 11.02

Mounting Hole Dimensions	*Ports 1 & 2*	*Port 3*	*Gauge Port*	ALUMINIUM		SG IRON	
				Model Code	*List Price*	*Model Code*	*List Price*
Inch	.375 NPTF	.25 NPTF	.25 NPTF	**B7B**		**B7B/S**	
Inch	.50 NPTF	.25 NPTF	.25 NPTF	**B7C**		**B7C/S**	
Inch	.75 NPTF	.25 NPTF	.25 NPTF	**B7D**		**B7D/S**	
Inch	SAE-8	SAE-6	.25 NPTF	**B7J**		**B7J/S**	
Inch	SAE-10	SAE-6	.25 NPTF	**B7K**		**B7K/S**	
Inch	SAE-12	SAE-6	.25 NPTF	**B7L**		**B7L/S**	
Metric	.375 BSPP	.25 BSPP	.25 BSPP	**B7U**		**B7U/S**	
Metric	.50 BSPP	.25 BSPP	.25 BSPP	**B7V**		**B7V/S**	
Metric	.75 BSPP	.25 BSPP	.25 BSPP	**B7W**		**B7W/S**	

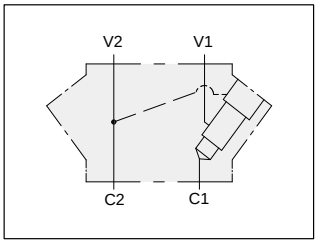

Inline body for load control applications.

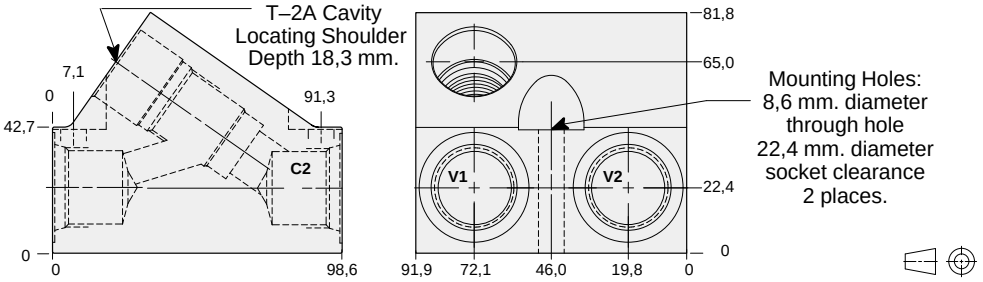

TYPICAL CARTRIDGES USED WITH THIS BODY

CBEA - *** Page 4.10
CBEG - *** Page 4.12
CBEH - *** Page 4.14
CKEB - *** Page 4.14

Instructions for ordering complete cartridge and body assemblies. Page iii

Pressure ratings, material specifications. Page 11.02

Ports C1, C2, & V1, V2	ALUMINIUM		SG IRON	
	Model Code	*List Price*	*Model Code*	*List Price*
.25 NPTF	**WPO**		**WPO/S**	
.375 NPTF	**WPP**		**WPP/S**	
.50 NPTF	**WPQ**		**WPQ/S**	
.75 NPTF	**WPR**		**WPR/S**	
SAE-6	**WPS**		**WPS/S**	
SAE-8	**WPT**		**WPT/S**	
SAE-10	**WPU**		**WPU/S**	
SAE-12	**WPV**		**WPV/S**	
.25 BSPP	**WPW**		**WPW/S**	
.375 BSPP	**WPX**		**WPX/S**	
.50 BSPP	**WPY**		**WPY/S**	
.75 BSPP	**WPZ**		**WPZ/S**	

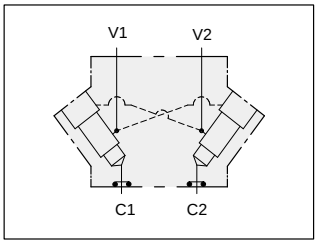

Two cavity inline gasket mount cross–piloted body for load control applications.

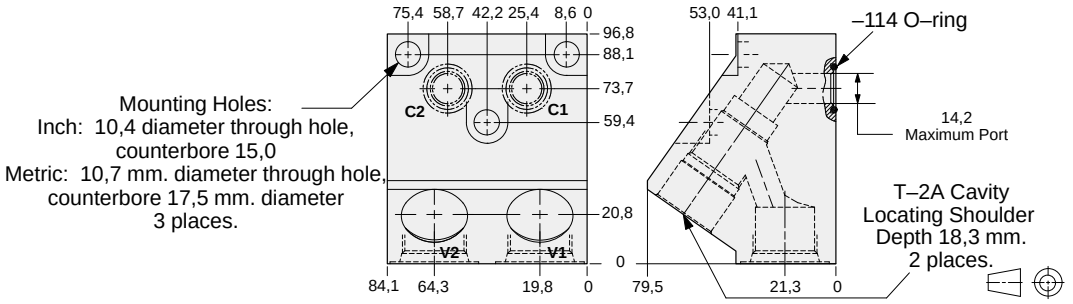

TYPICAL CARTRIDGES USED WITH THIS BODY

CBEA - *** Page 4.10
CBEG - *** Page 4.12
CBEH - *** Page 4.14
CKEB - *** Page 4.14

Cartridge seal type determines O–ring type.

Instructions for ordering complete cartridge and body assemblies. Page iii

Pressure ratings, material specifications. Page 11.02

Ports V1, & V2	ALUMINIUM		SG IRON	
	Model Code	*List Price*	*Model Code*	*List Price*
.25 NPTF	**VYA**		**VYA/S**	
.375 NPTF	**VYB**		**VYB/S**	
.50 NPTF	**VYC**		**VYC/S**	
.75 NPTF	**VYD**		**VYD/S**	
SAE-6	**VYI**		**VYI/S**	
SAE-8	**VYJ**		**VYJ/S**	
SAE-10	**VYK**		**VYK/S**	
SAE-12	**VYL**		**VYL/S**	
.25 BSPP	**VYT**		**VYT/S**	
.375 BSPP	**VYU**		**VYU/S**	
.50 BSPP	**VYV**		**VYY/S**	
.75 BSPP	**VYW**		**VYW/S**	

LINE MOUNT BODIES

- Aluminium rated to 210 bar and SG Iron rated to 350 bar.

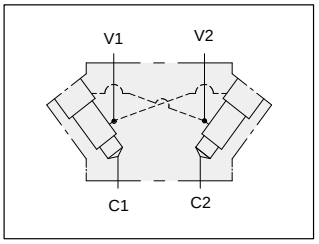

Two cavity inline cross–piloted body for load control applications.

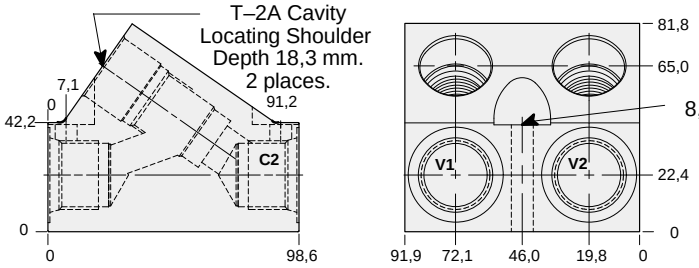

TYPICAL CARTRIDGES USED WITH THIS BODY

CBEA - *** Page 4.10
CBEG - *** Page 4.12
CBEH - *** Page 4.14
CKEB - *** Page 4.14

Instructions for ordering complete cartridge and body assemblies. Page viii

Pressure ratings, material specifications. Page 11.02

Ports C1, C2, & V1, V2	ALUMINIUM		SG IRON	
	Model Code	*List Price*	*Model Code*	*List Price*
.25 NPTF	**XAA**		**XAA/S**	
.375 NPTF	**XAB**		**XAB/S**	
.50 NPTF	**XAC**		**XAC/S**	
.75 NPTF	**XAD**		**XAD/S**	
SAE-6	**XAI**		**XAI/S**	
SAE-8	**XAJ**		**XAJ/S**	
SAE-10	**XAK**		**XAK/S**	
SAE-12	**XAL**		**XAL/S**	
.25 BSPP	**XAT**		**XAT/S**	
.375 BSPP	**XAU**		**XAU/S**	
.50 BSPP	**XAV**		**XAV/S**	
.75 BSPP	**XAW**		**XAW/S**	

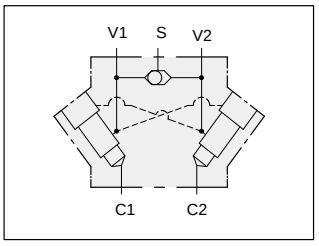

Two cavity inline cross–piloted body with shuttle for load control applications.

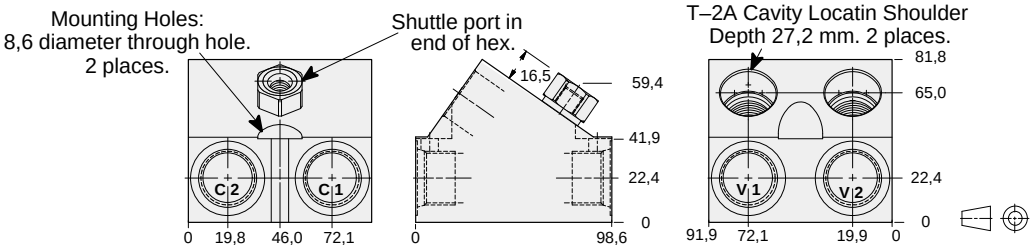

TYPICAL CARTRIDGES USED WITH THIS BODY

CBEA - *** Page 4.10
CBEG - *** Page 4.12
CBEH - *** Page 4.14
CKEB - *** Page 4.14

Cartridge seal type determines check valve seal type.

Instructions for ordering complete cartridge and body assemblies. Page viii

Pressure ratings, material specifications. Page 11.02

Ports C1, C2, & V1, V2	*Shuttle Cartridge*	*Shuttle Port*	ALUMINIUM		SG IRON	
			Model Code	*List Price*	*Model Code*	*List Price*
.25 NPTF	CSAA – EXN	SAE-4	**XHA**		**XHA/S**	
.375 NPTF	CSAA – EXN	SAE-4	**XHB**		**XHB/S**	
.50 NPTF	CSAA – EXN	SAE-4	**XHC**		**XHC/S**	
.75 NPTF	CSAA – EXN	SAE-4	**XHD**		**XHD/S**	
SAE-6	CSAA – EXN	SAE-4	**XHI**		**XHI/S**	
SAE-8	CSAA – EXN	SAE-4	**XHJ**		**XHJ/S**	
SAE-10	CSAA – EXN	SAE-4	**XHK**		**XHK/S**	
SAE-12	CSAA – EXN	SAE-4	**XHL**		**XHL/S**	
.25 BSPP	CSAA – BXN	.25 BSPP	**XHT**		**XHT/S**	
.375 BSPP	CSAA – BXN	.25 BSPP	**XHU**		**XHU/S**	
.50 BSPP	CSAA – BXN	.25 BSPP	**XHV**		**XHV/S**	
.75 BSPP	CSAA – BXN	.25 BSPP	**XHW**		**XHW/S**	

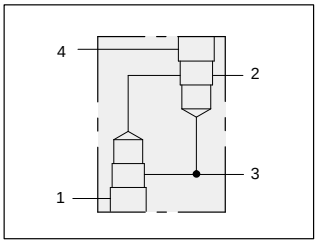

TYPICAL CARTRIDGES USED WITH THIS BODY

FRDA - *** Page 6.02

Instructions for ordering complete cartridge and body assemblies. Page viii

Pressure ratings, material specifications. Page 11.02

Two cavity body for flow control applications.

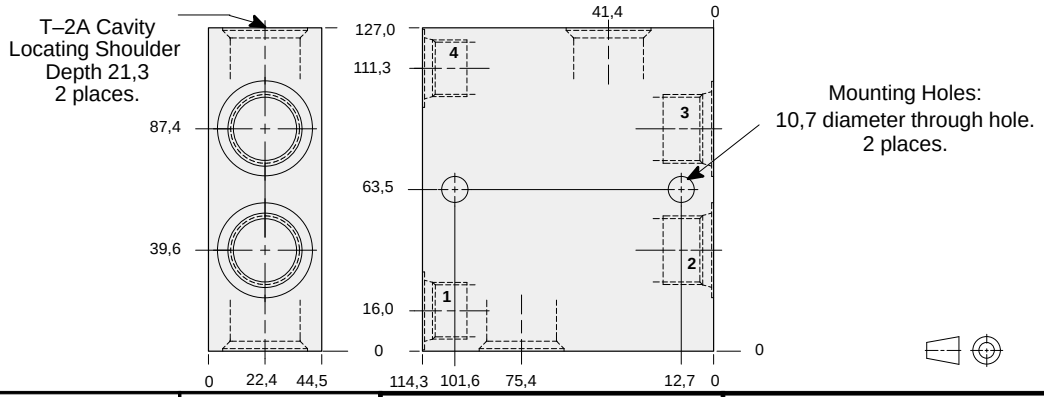

Port 2 & 3	Port 1 & 4	ALUMINIUM		SG IRON	
		Model Code	List Price	Model Code	List Price
.375 NPTF	.375 NPTF	**VXN**		**VXN/S**	
.50 NPTF	.50 NPTF	**VXP**		**VXP/S**	
.75 NPTF	.50 NPTF	**VXQ**		**VXQ/S**	
SAE-8	SAE-8	**VXR**		**VXR/S**	
SAE-10	SAE-10	**VXS**		**VXS/S**	
SAE-12	SAE-10	**VXT**		**VXT/S**	
.375 BSPP	.375 BSPP	**VXU**		**VXU/S**	
.50 BSPP	.50 BSPP	**VXV**		**VXV/S**	
.75 BSPP	.50 BSPP	**VXW**		**VXW/S**	

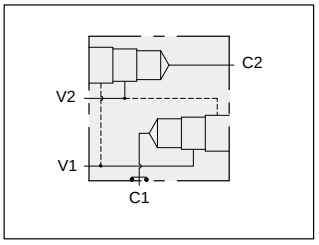

TYPICAL CARTRIDGES USED WITH THIS BODY

CBEA - *** Page 4.10
CBEG - *** Page 4.12
CBEH - *** Page 4.14
CKEB - *** Page 4.14

Cartridge seal type determines O–ring type.

Instructions for ordering complete cartridge and body assemblies. Page viii

Pressure ratings, material specifications. Page 11.02

Two cavity gasket mount body for load control applications.

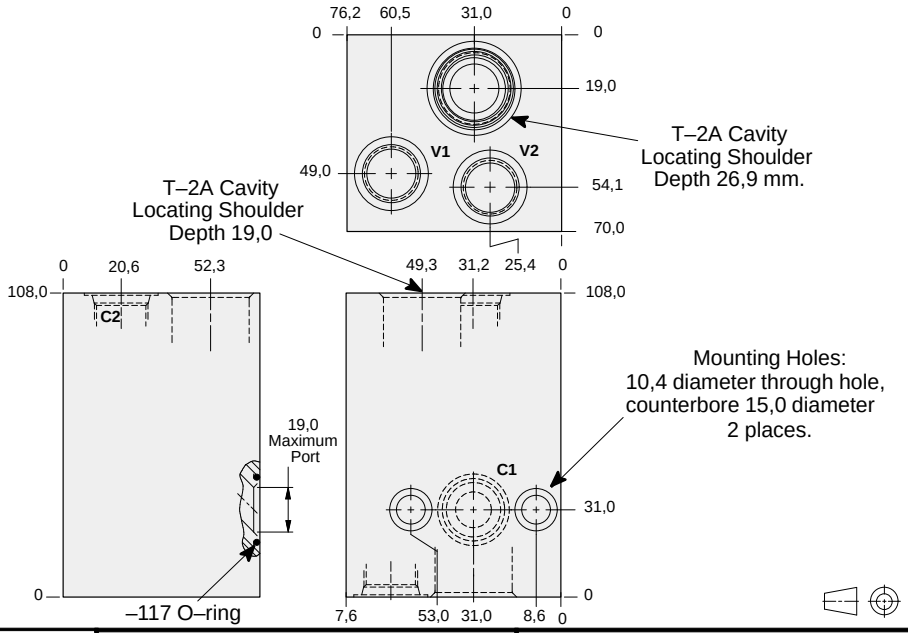

Ports C2, V1, & V2	ALUMINIUM		SG IRON	
	Model Code	List Price	Model Code	List Price
.50 NPTF	**YVW**		**YVW/S**	
SAE-8	**YVV**		**YVV/S**	
.50 BSPP	**YVU**		**YVU/S**	

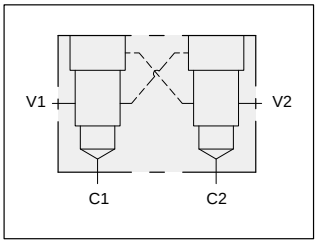

Two cavity 90 degree cross–piloted body for load control applications.

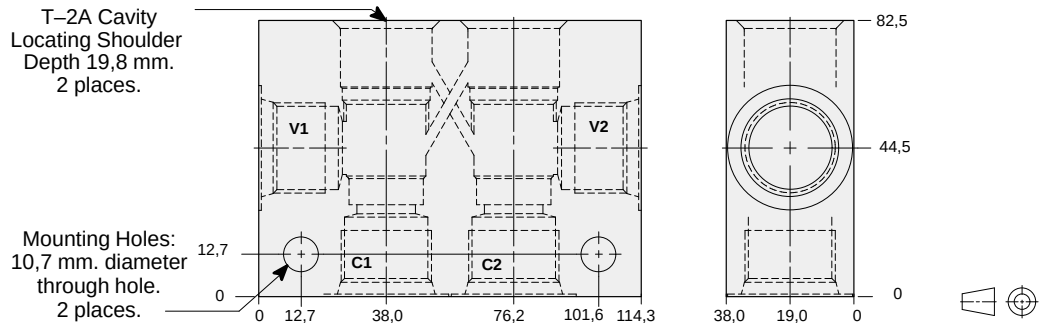

TYPICAL CARTRIDGES USED WITH THIS BODY

CBEA - *** Page 4.10
CBEG - *** Page 4.12
CBEH - *** Page 4.14
CKEB - *** Page 4.14

Instructions for ordering complete cartridge and body assemblies. Page viii

Pressure ratings, material specifications. Page 11.02

Ports C1, C2, & V1, V2	ALUMINIUM		SG IRON	
	Model Code	*List Price*	*Model Code*	*List Price*
.25 NPTF	**YAA**		**YAA/S**	
.375 NPTF	**YAB**		**YAB/S**	
.50 NPTF	**YAC**		**YAC/S**	
.75 NPTF	**YAD**		**YAD/S**	
SAE-6	**YAI**		**YAI/S**	
SAE-8	**YAJ**		**YAJ/S**	
SAE-10	**YAK**		**YAK/S**	
SAE-12	**YAL**		**YAL/S**	
.25 BSPP	**YAT**		**YAT/S**	
.375 BSPP	**YAU**		**YAU/S**	
.50 BSPP	**YAV**		**YAV/S**	

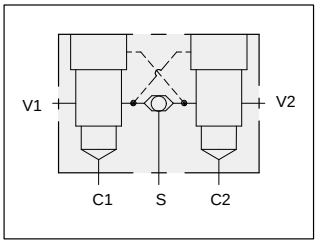

Two cavity 90 degree cross–piloted body with shuttle for load control applications.

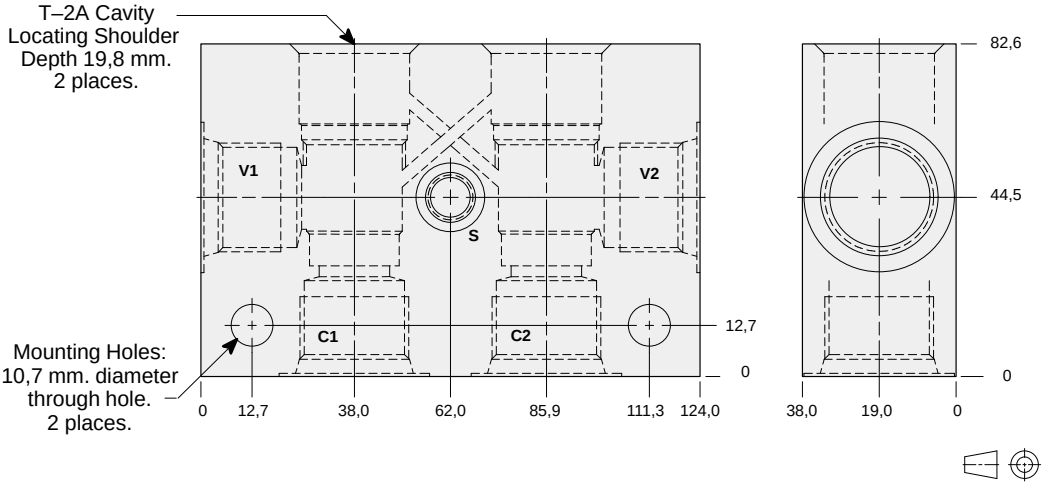

TYPICAL CARTRIDGES USED WITH THIS BODY

CBEA - *** Page 4.10
CBEG - *** Page 4.12
CBEH - *** Page 4.14
CKEB - *** Page 4.14

Instructions for ordering complete cartridge and body assemblies. Page viii

Pressure ratings, material specifications. Page 11.02

Ports C1, C2, & V1, V2	*Port S*	ALUMINIUM		SG IRON	
		Model Code	*List Price*	*Model Code*	*List Price*
.50 NPTF	.25 NPTF	**YHC**		**YHC/S**	
.75 NPTF	.25 NPTF	**YHD**		**YHD/S**	
SAE-10	SAE-4	**YHK**		**YHK/S**	
SAE-12	SAE-4	**YHL**		**YHL/S**	
.50 BSPP	.25 BSPP	**YHV**		**YHV/S**	
.75 BSPP	.25 BSPP	**YHW**		**YHW/S**	

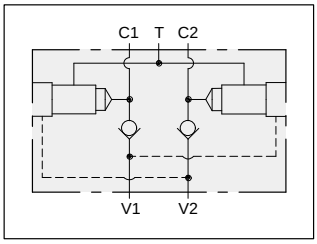

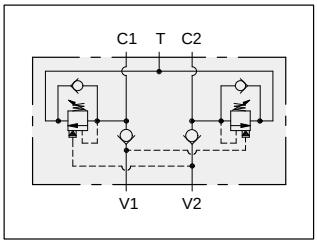

Two cavity dual load control body with checks.

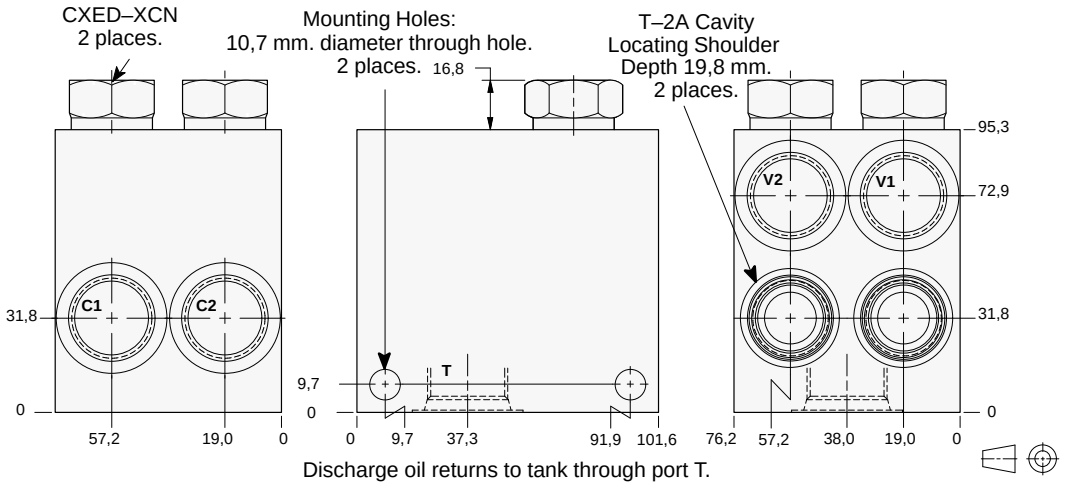

Discharge oil returns to tank through port T.

TYPICAL CARTRIDGES USED WITH THIS BODY

CBEA - *** Page 4.10
CBEG - *** Page 4.12
CBEH - *** Page 4.14

Cartridge seal type determines check valve seal type.

Instructions for ordering complete cartridge and body assemblies. Page viii

Pressure ratings, material specifications. Page 11.02

Ports C1, C2, & V1, V2	*Port T*	ALUMINIUM		SG IRON	
		Model Code	*List Price*	*Model Code*	*List Price*
.50 NPTF	.75 NPTF	**BMC**		**BMC/S**	
.75 NPTF	.75 NPTF	**BMD**		**BMD/S**	
SAE-10	SAE-12	**BMK**		**BMK/S**	
SAE-12	SAE-12	**BML**		**BML/S**	
.50 BSPP	.75 BSPP	**BMV**		**BMV/S**	
.75 BSPP	.75 BSPP	**BMW**		**BMW/S**	

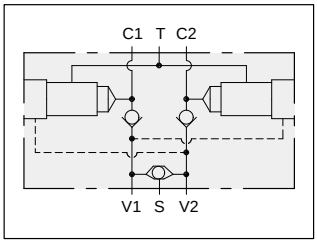

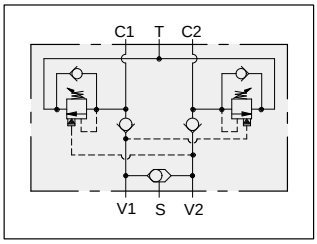

Two cavity dual load control body with checks and shuttle.

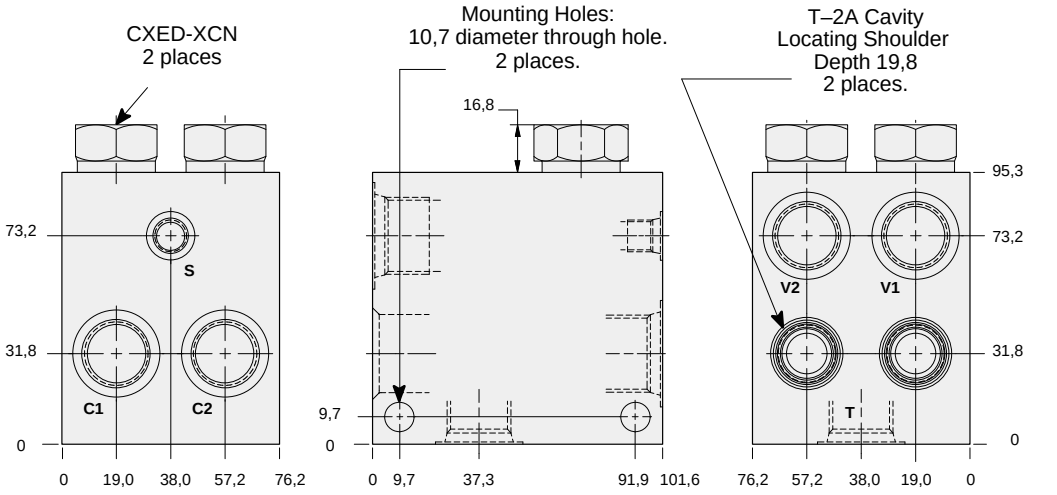

Discharge oil returns to tank through port T.

TYPICAL CARTRIDGES USED WITH THIS BODY

CBEA - *** Page 4.10
CBEG - *** Page 4.12
CBEH - *** Page 4.14

Cartridge seal type determines check valve seal type.

Instructions for ordering complete cartridge and body assemblies. Page viii

Pressure ratings, material specifications. Page 11.02

Ports C1, C2, & V1, V2	*Port T*	*Port S*	ALUMINIUM		SG IRON	
			Model Code	*List Price*	*Model Code*	*List Price*
.50 NPTF	.75 NPTF	.25 NPTF	**BNC**		**BNC/S**	
.75 NPTF	.75 NPTF	.25 NPTF	**BND**		**BND/S**	
SAE-10	SAE-12	SAE-4	**BNK**		**BNK/S**	
SAE-12	SAE-12	SAE-4	**BNL**		**BNL/S**	
.50 BSPP	.75 BSPP	.25 BSPP	**BNV**		**BNV/S**	
.75 BSPP	.75 BSPP	.25 BSPP	**BNW**		**BNW/S**	

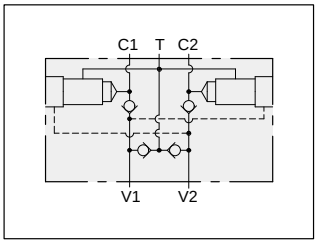

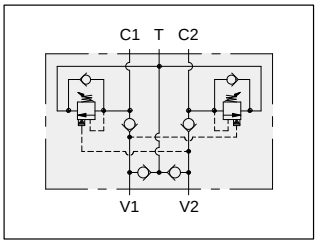

Two cavity dual load control body with make–up checks.

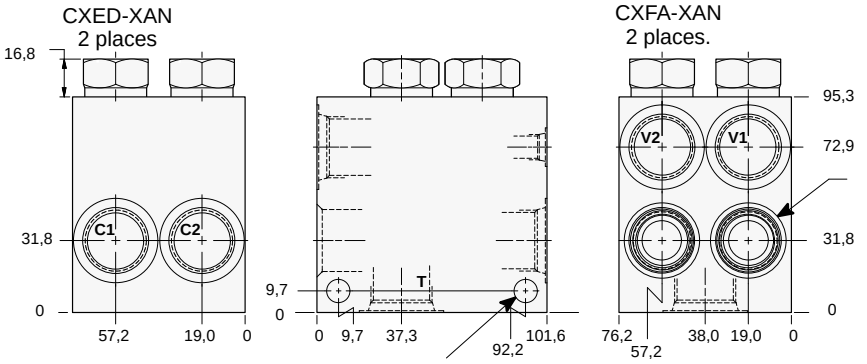

Mounting Holes:
10,7 mm. diameter through hole.
2 places.

Discharge oil returns to tank through directional valve or port T.

TYPICAL CARTRIDGES USED WITH THIS BODY

CBEA - *** Page 4.10
CBEG - *** Page 4.12
CBEH - *** Page 4.14

Cartridge seal type determines check valve seal type.

Instructions for ordering complete cartridge and body assemblies. Page viii

Pressure ratings, material specifications. Page 11.02

Ports C1, C2, & V1, V2	*Port T*	ALUMINIUM		SG IRON	
		Model Code	*List Price*	*Model Code*	*List Price*
.50 NPTF	.75 NPTF	**BPC**		**BPC/S**	
.75 NPTF	.75 NPTF	**BPD**		**BPD/S**	
SAE-10	SAE-12	**BPK**		**BPK/S**	
SAE-12	SAE-12	**BPL**		**BPL/S**	
.50 BSPP	.75 BSPP	**BPV**		**BPV/S**	
.75 BSPP	.75 BSPP	**BPW**		**BPW/S**	

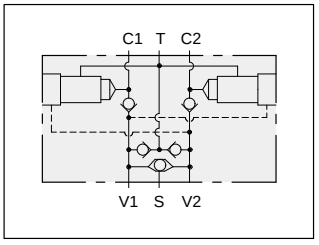

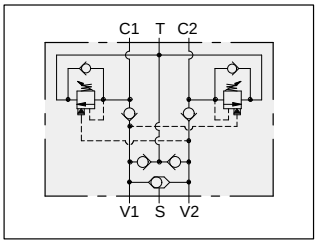

Two cavity dual load control body with make–up checks and shuttle.

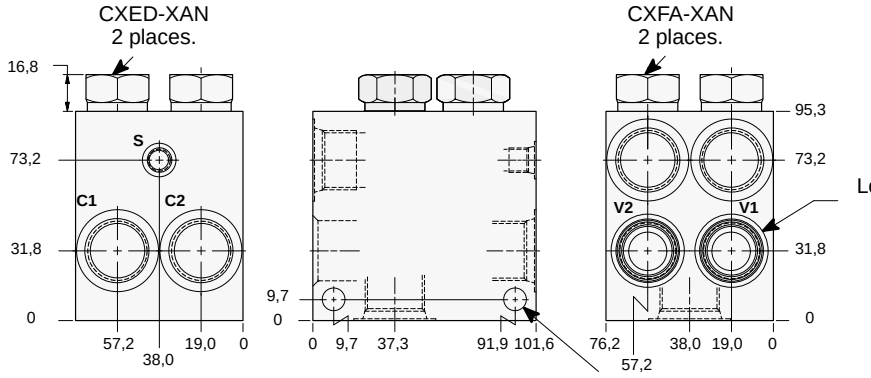

Mounting Holes:
10,7 mm. diameter through hole.
2 places.

Discharge oil returns to tank through directional valve or port T.

TYPICAL CARTRIDGES USED WITH THIS BODY

CBEA - *** Page 4.10
CBEG - *** Page 4.12
CBEH - *** Page 4.14

Cartridge seal type determines check valve seal type.

Instructions for ordering complete cartridge and body assemblies. Page viii

Pressure ratings, material specifications. Page 11.02

Ports C1, C2, & V1, V2	*Port T*	*Port S*	ALUMINIUM		SG IRON	
			Model Code	*List Price*	*Model Code*	*List Price*
.50 NPTF	.75 NPTF	.25 NPTF	**BQC**		**BQC/S**	
.75 NPTF	.75 NPTF	.25 NPTF	**BQD**		**BQD/S**	
SAE-10	SAE-12	SAE-4	**BQK**		**BQK/S**	
SAE-12	SAE-12	SAE-4	**BQL**		**BQL/S**	
.50 BSPP	.75 BSPP	.25 BSPP	**BQV**		**BQV/S**	
.75 BSPP	.75 BSPP	.25 BSPP	**BQW**		**BQW/S**	

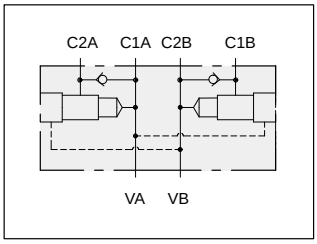

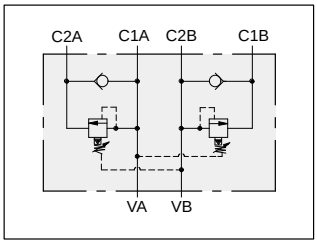

Two cavity dual sequence body with reverse free flow checks.

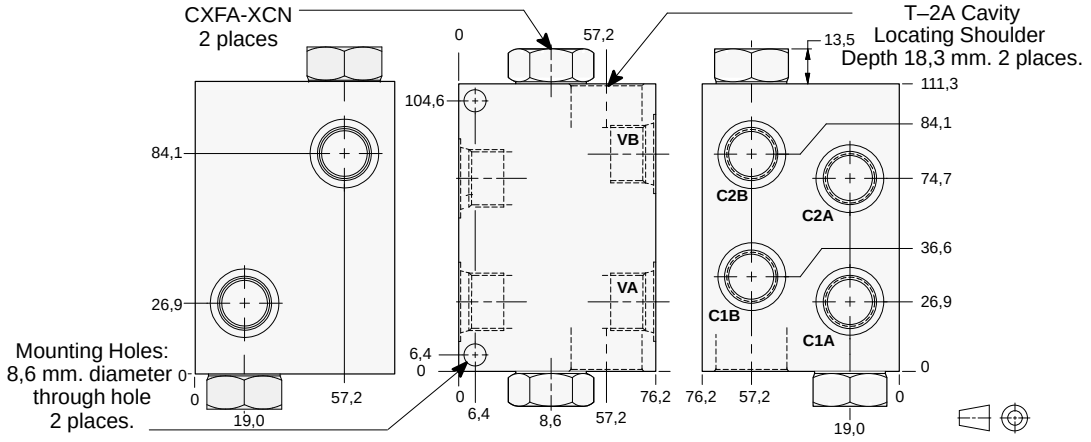

TYPICAL CARTRIDGES USED WITH THIS BODY

RSFC - *** Page 2.06
SQFB - *** Page 2.08

Cartridge seal type determines check valve seal type.

Instructions for ordering complete cartridge and body assemblies. Page viii

Pressure ratings, material specifications. Page 11.02

All Ports	ALUMINIUM		SG IRON	
	Model Code	*List Price*	*Model Code*	*List Price*
.375 NPTF	**B8B**		**B8B/S**	
.50 NPTF	**B8C**		**B8C/S**	
.75 NPTF	**B8D**		**B8D/S**	
SAE-8	**B8J**		**B8J/S**	
SAE-10	**B8K**		**B8K/S**	
.375 BSPP	**B8U**		**B8U/S**	
.50 BSPP	**B8V**		**B8V/S**	
.75 BSPP	**B8W**		**B8W/S**	

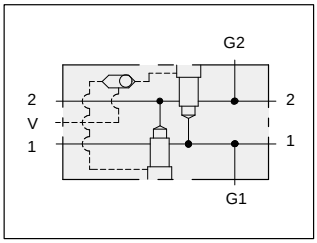

Two cavity through port body with shuttle and gauge ports.

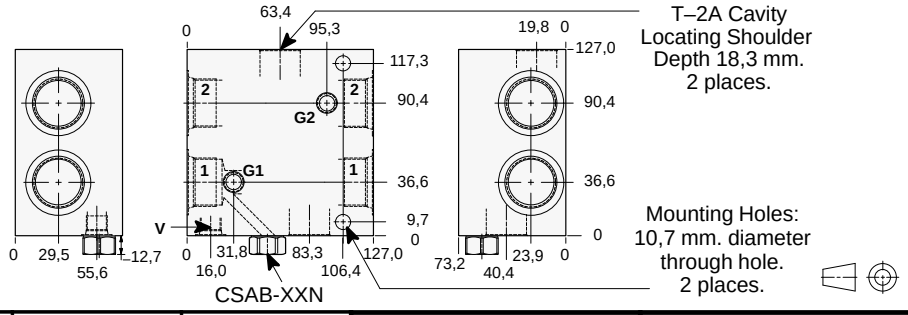

TYPICAL CARTRIDGES USED WITH THIS BODY

RVEA - *** Page 1.18

Cartridge seal type determines check valve seal type.

Instructions for ordering complete cartridge and body assemblies. Page viii

Pressure ratings, material specifications. Page 11.02

Ports 1 & 2	*Ports G1 & G2*	*Port V*	ALUMINIUM		SG IRON	
			Model Code	*List Price*	*Model Code*	*List Price*
.375 NPTF	.25 NPTF	.25 NPTF	**XBB**		**XBB/S**	
.50 NPTF	.25 NPTF	.25 NPTF	**XBC**		**XBC/S**	
.75 NPTF	.25 NPTF	.25 NPTF	**XBD**		**XBD/S**	
1.00 NPTF	.25 NPTF	.25 NPTF	**XBE**		**XBE/S**	
SAE-6	.25 NPTF	SAE-6	**XBI**		**XBI/S**	
SAE-8	.25 NPTF	SAE-6	**XBJ**		**XBJ/S**	
SAE-10	.25 NPTF	SAE-6	**XBK**		**XBK/S**	
SAE-12	.25 NPTF	SAE-6	**XBL**		**XBL/S**	
SAE-16	.25 NPTF	SAE-6	**XBM**		**XBM/S**	
.375 BSPP	.25 BSPP	.25 BSPP	**XBU**		**XBU/S**	
.50 BSPP	.25 BSPP	.25 BSPP	**XBV**		**XBV/S**	
.75 BSPP	.25 BSPP	.25 BSPP	**XBW**		**XBW/S**	
1.00 BSPP	.25 BSPP	.25 BSPP	**XBX**		**XBX/S**	

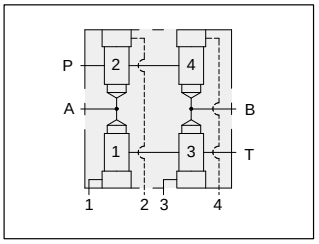

Four cavity four–way logic body for directional applications.

Mounting Holes:
Inch: .375-16 UNC-2B
x 15,7 mm. deep.
Metric: M10 x 1.50-6H
x 15,7 mm. deep.
2 places.

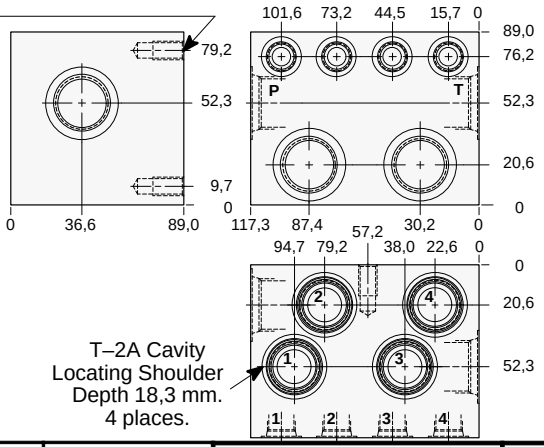

T–2A Cavity
Locating Shoulder
Depth 18,3 mm.
4 places.

TYPICAL CARTRIDGES USED WITH THIS BODY

LOFC - *** Page 9.08
LKFC - *** Page 9.10
LPFC - *** Page 9.12
LRFC - *** Page 9.14

Instructions for ordering complete cartridge and body assemblies. Page viii

Pressure ratings, material specifications. Page 11.02

Mounting Hole Dimensions	*Ports A & B P & T*	*Ports 1 & 2, 3 & 4*	ALUMINIUM		SG IRON	
			Model Code	*List Price*	*Model Code*	*List Price*
Inch	.375 NPTF	.25 NPTF	**YPZ**		**YPZ/S**	
Inch	.50 NPTF	.25 NPTF	**YPY**		**YPY/S**	
Inch	.75 NPTF	.25 NPTF	**YPX**		**YPX/S**	
Inch	SAE-8	SAE-6	**YPW**		**YPW/S**	
Inch	SAE-10	SAE-6	**YPV**		**YPV/S**	
Inch	SAE-12	SAE-6	**YPT**		**YPT/S**	
Metric	.375 BSPP	.25 BSPP	**YPP**		**YPP/S**	
Metric	.50 BSPP	.25 BSPP	**YPM**		**YPM/S**	
Metric	.75 BSPP	.25 BSPP	**YPQ**		**YPQ/S**	

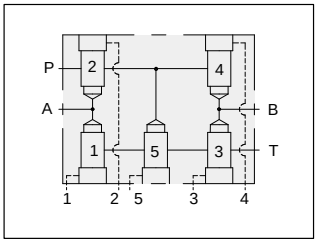

Five cavity four–way logic body for directional applications.

Mounting Holes:
Inch: .375-16 UNC-2B
x 15,7 mm. deep.
Metric: M10 x 1.50-6H
x 15,7 mm. deep.
2 places.

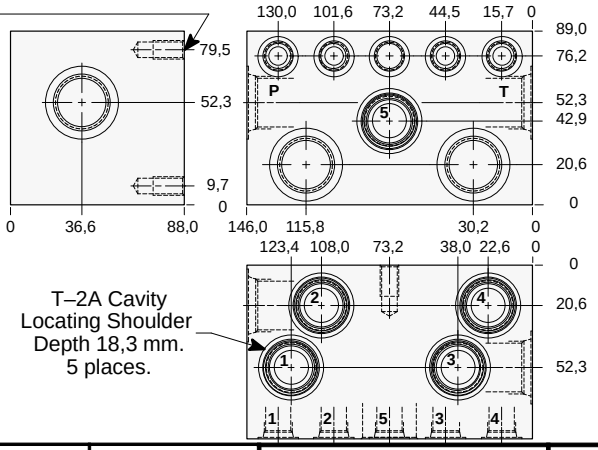

T–2A Cavity
Locating Shoulder
Depth 18,3 mm.
5 places.

TYPICAL CARTRIDGES USED WITH THIS BODY

LOFC - *** Page 9.08
LKFC - *** Page 9.10
LPFC - *** Page 9.12
LRFC - *** Page 9.14

Instructions for ordering complete cartridge and body assemblies. Page viii

Pressure ratings, material specifications. Page 11.02

Mounting Hole Dimensions	*Ports A & B P & T*	*Ports 1,2, 3,4 & 5*	ALUMINIUM		SG IRON	
			Model Code	*List Price*	*Model Code*	*List Price*
Inch	.375 NPTF	.25 NPTF	**YPO**		**YPO/S**	
Inch	.50 NPTF	.25 NPTF	**YPN**		**YPN/S**	
Inch	.75 NPTF	.25 NPTF	**YPS**		**YPS/S**	
Inch	SAE-8	SAE-6	**YPL**		**YPL/S**	
Inch	SAE-10	SAE-6	**YPK**		**YPK/S**	
Inch	SAE-12	SAE-6	**YPJ**		**YPJ/S**	
Metric	.375 BSPP	.25 BSPP	**YPH**		**YPH/S**	
Metric	.50 BSPP	.25 BSPP	**YPG**		**YPG/S**	
Metric	.75 BSPP	.25 BSPP	**YPF**		**YPF/S**	

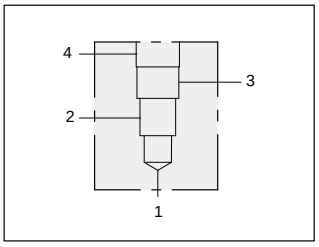

90 degree body.

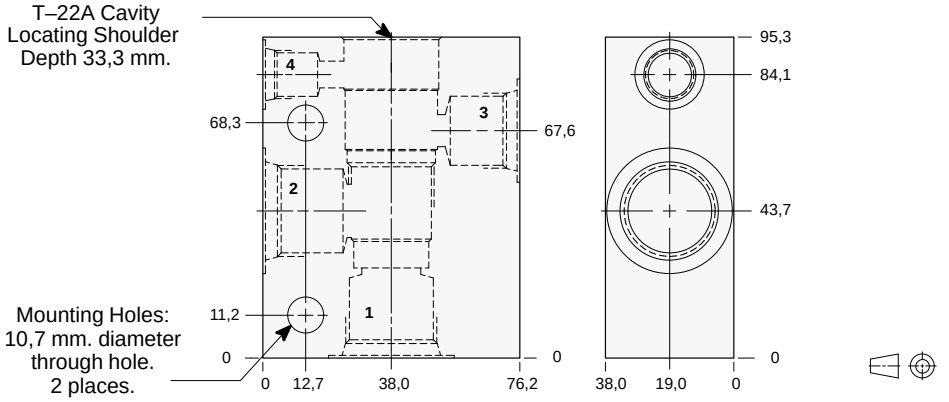

TYPICAL CARTRIDGES USED WITH THIS BODY

RVED - *** Page 1.20
PVFA - *** Page 3.14
PVFB - *** Page 3.16
CWEA - *** Page 4.18
CWEG - *** Page 4.20
CVEV - *** Page 4.22
FVDA - *** Page 6.04
DPCM - *** Page 8.10
DPCN - *** Page 8.11
DPCO - *** Page 8.12
DPCP - *** Page 8.13

Instructions for ordering complete cartridge and body assemblies. Page iii

Pressure ratings, material specifications. Page 11.02

Ports 1 & 2	*Port 3*	*Port 4*	ALUMINIUM		SG IRON	
			Model Code	*List Price*	*Model Code*	*List Price*
.375 NPTF	.375 NPTF	.25 NPTF	**NAB**		**NAB/S**	
.50 NPTF	.50 NPTF	.25 NPTF	**NAC**		**NAC/S**	
.75 NPTF	.50 NPTF	.25 NPTF	**NAD**		**NAD/S**	
SAE-8	SAE-8	SAE-6	**NAJ**		**NAJ/S**	
SAE-10	SAE-10	SAE-6	**NAK**		**NAK/S**	
SAE-12	SAE-10	SAE-6	**NAL**		**NAL/S**	
.375 BSPP	.375 BSPP	.25 BSPP	**NAU**		**NAU/S**	
.50 BSPP	.50 BSPP	.25 BSPP	**NAV**		**NAV/S**	
.75 BSPP	.50 BSPP	.25 BSPP	**NAW**		**NAW/S**	

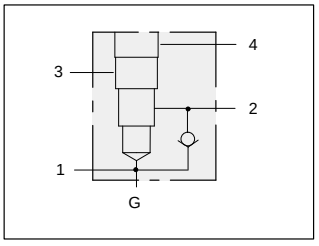

Body with reverse free flow check and gauge port.

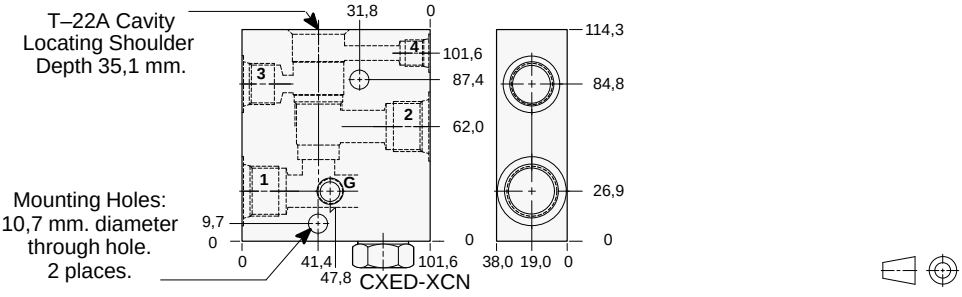

TYPICAL CARTRIDGES USED WITH THIS BODY

PVFA - *** Page 3.14
PVFB - *** Page 3.16

Cartridge seal type determines check valve seal type.

Instructions for ordering complete cartridge and body assemblies. Page iii

Pressure ratings, material specifications. Page 11.02

Ports 1 & 2	*Port 3*	*Port 4*	*Gauge Port*	ALUMINIUM		SG IRON	
				Model Code	*List Price*	*Model Code*	*List Price*
.25 NPTF	.25 NPTF	.25 NPTF	.25 NPTF	**N4A**		**N4A/S**	
.375 NPTF	.375 NPTF	.25 NPTF	.25 NPTF	**N4B**		**N4B/S**	
.50 NPTF	.50 NPTF	.25 NPTF	.25 NPTF	**N4C**		**N4C/S**	
.75 NPTF	.50 NPTF	.25 NPTF	.25 NPTF	**N4D**		**N4D/S**	
SAE-6	SAE-6	SAE-6	.25 NPTF	**N4I**		**N4I/S**	
SAE-8	SAE-8	SAE-6	.25 NPTF	**N4J**		**N4J/S**	
SAE-10	SAE-10	SAE-6	.25 NPTF	**N4K**		**N4K/S**	
SAE-12	SAE-10	SAE-6	.25 NPTF	**N4L**		**N4L/S**	
.25 BSPP	.25 BSPP	.25 BSPP	.25 BSPP	**N4T**		**N4T/S**	
.375 BSPP	.375 BSPP	.25 BSPP	.25 BSPP	**N4U**		**N4U/S**	
.50 BSPP	.50 BSPP	.25 BSPP	.25 BSPP	**N4V**		**N4V/S**	
.75 BSPP	.50 BSPP	.25 BSPP	.25 BSPP	**N4W**		**N4W/S**	

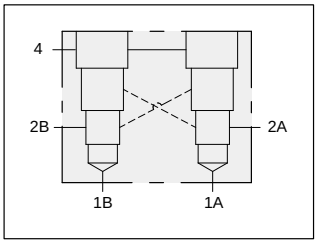

Two cavity 90 degree cross–piloted body with common port 4 for load control applications.

T–22A Cavity Locating Shoulder Depth 33,3 mm. 2 places.

Mounting Holes: 10,7 mm. diameter through hole. 2 places.

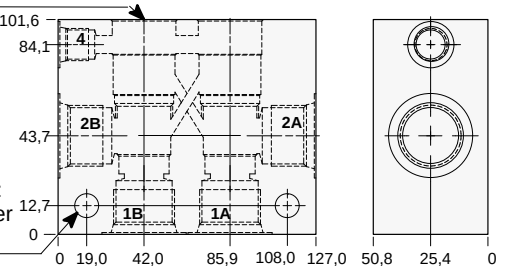

TYPICAL CARTRIDGES USED WITH THIS BODY

CWEA - *** Page 4.18
CWEG - *** Page 4.20
CVEV - *** Page 4.22

Instructions for ordering complete cartridge and body assemblies. Page iii

Pressure ratings, material specifications. Page 11.02

Ports 1A, 1B, 2A, & 2B	*Port 4*	ALUMINIUM		SG IRON	
		Model Code	*List Price*	*Model Code*	*List Price*
.25 NPTF	.25 NPTF	**XIA**		**XIA/S**	
.375 NPTF	.25 NPTF	**XIB**		**XIB/S**	
.50 NPTF	.25 NPTF	**XIC**		**XIC/S**	
.75 NPTF	.25 NPTF	**XID**		**XID/S**	
SAE-6	SAE-6	**XII**		**XII/S**	
SAE-8	SAE-6	**XIJ**		**XIJ/S**	
SAE-10	SAE-6	**XIK**		**XIK/S**	
SAE-12	SAE-6	**XIL**		**XIL/S**	
.25 BSPP	.25 BSPP	**XIT**		**XIT/S**	
.375 BSPP	.25 BSPP	**XIU**		**XIU/S**	
.50 BSPP	.25 BSPP	**XIV**		**XIV/S**	
.75 BSPP	.25 BSPP	**XIW**		**XIW/S**	

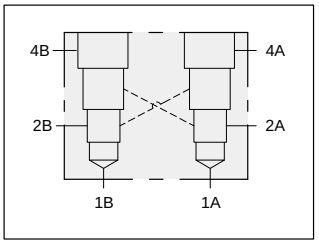

Two cavity 90 degree cross–piloted body with independent port 4 for load control applications.

T–22A Cavity Locating Shoulder Depth 33,3 mm. 2 places.

Mounting Holes: 10,7 mm. diameter through hole. 2 places.

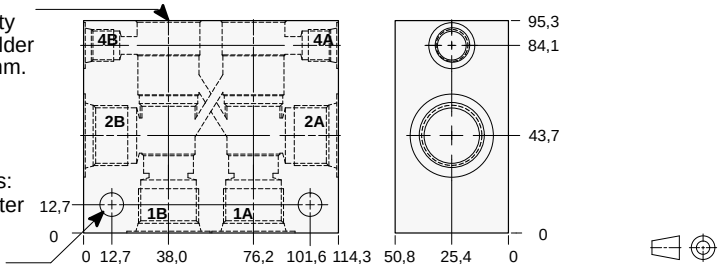

TYPICAL CARTRIDGES USED WITH THIS BODY

CWEA - *** Page 4.18
CWEG - *** Page 4.20
CVEV - *** Page 4.22

Instructions for ordering complete cartridge and body assemblies. Page iii

Pressure ratings, material specifications. Page 11.02

Ports 1A, 1B, 2A, & 2B	*Ports 4A & 4B*	ALUMINIUM		SG IRON	
		Model Code	*List Price*	*Model Code*	*List Price*
.25 NPTF	.25 NPTF	**XRA**		**XRA/S**	
.375 NPTF	.25 NPTF	**XRB**		**XRB/S**	
.50 NPTF	.25 NPTF	**XRC**		**XRC/S**	
.75 NPTF	.25 NPTF	**XRD**		**XRD/S**	
SAE-6	SAE-6	**XRI**		**XRI/S**	
SAE-8	SAE-6	**XRJ**		**XRJ/S**	
SAE-10	SAE-6	**XRK**		**XRK/S**	
SAE-12	SAE-6	**XRL**		**XRL/S**	
.25 BSPP	.25 BSPP	**XRT**		**XRT/S**	
.375 BSPP	.25 BSPP	**XRU**		**XRU/S**	
.50 BSPP	.25 BSPP	**XRV**		**XRV/S**	
.75 BSPP	.25 BSPP	**XRW**		**XRW/S**	

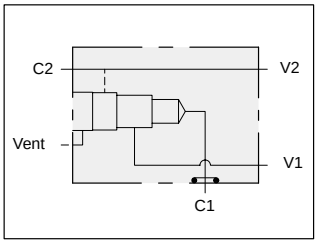

Gasket mount body for load control applications.

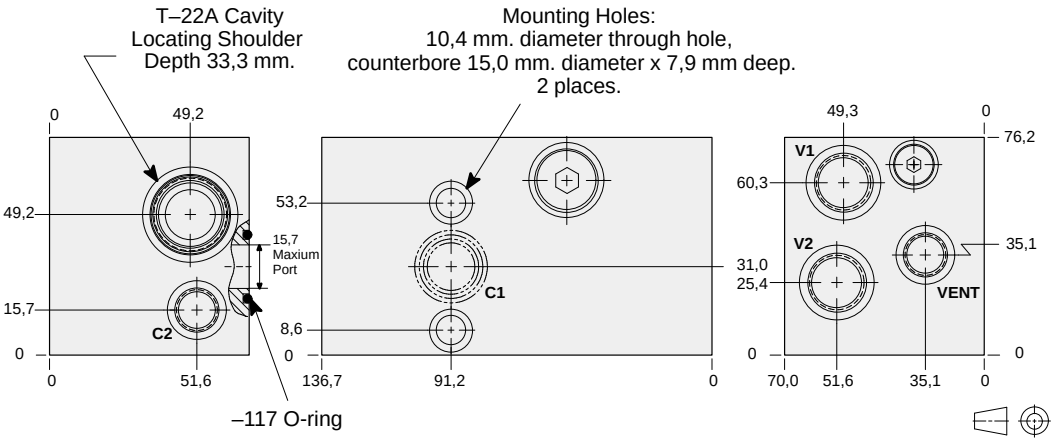

TYPICAL CARTRIDGES USED WITH THIS BODY

CWEA - ***	Page	4.18
CWEG - ***	Page	4.20
CVEV - ***	Page	4.22

Cartridge seal type determines O–ring type.

Instructions for ordering complete cartridge and body assemblies. Page viii

Pressure ratings, material specifications. Page 11.02

Ports C2, V1, & V2	*Vent Port*	ALUMINIUM		SG IRON	
		Model Code	*List Price*	*Model Code*	*List Price*
.50 NPTF	.25 NPTF	**WJB**		**WJB/S**	
SAE-8	SAE-6	**WJC**		**WJC/S**	
.50 BSPP	.25 BSPP	**WJD**		**WJD/S**	

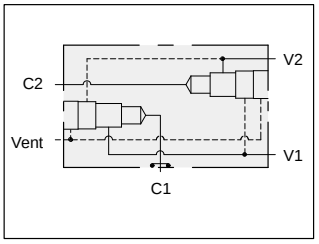

Two cavity gasket mount dual load control body.

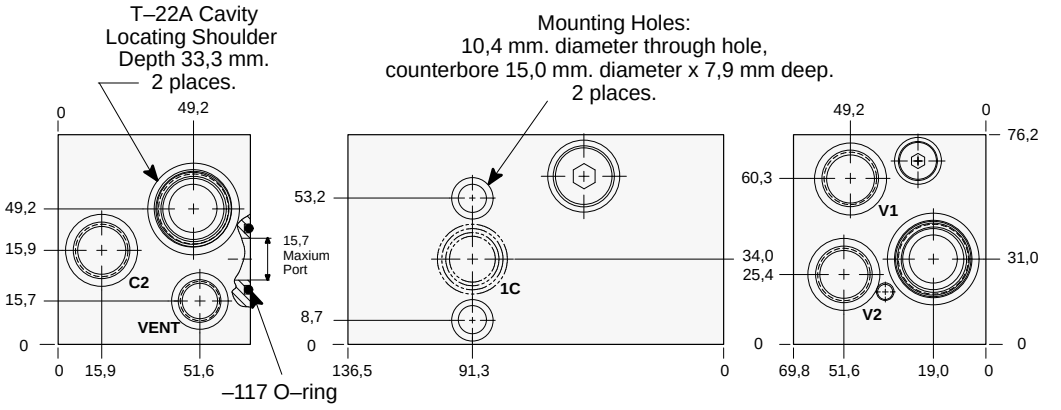

TYPICAL CARTRIDGES USED WITH THIS BODY

CWEA - ***	Page	4.18
CWEG - ***	Page	4.20
CVEV - ***	Page	4.22

Cartridge seal type determines O–ring type.

Instructions for ordering complete cartridge and body assemblies. Page viii

Pressure ratings, material specifications. Page 11.02

Ports C2, V1, & V2	*Vent Port*	ALUMINIUM		SG IRON	
		Model Code	*List Price*	*Model Code*	*List Price*
.50 NPTF	.25 NPTF	**VZN**		**VZN/S**	
SAE-8	SAE-6	**VZO**		**VZO/S**	
.50 BSPP	.25 BSPP	**VZP**		**VZP/S**	

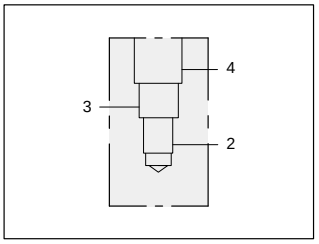

TYPICAL CARTRIDGES USED WITH THIS BODY

FSDD	- ***	Page	7.08
FSDA	- ***	Page	7.10
FSDS	- ***	Page	7.12
FSDH	- ***	Page	7.14

Instructions for ordering complete cartridge and body assemblies. Page viii

Pressure ratings, material specifications. Page 11.02

Body for flow divider/combiner applications.

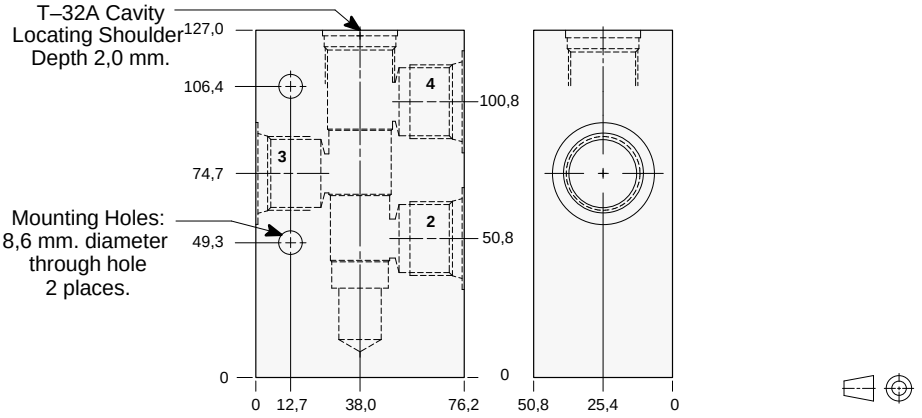

Ports 2, 3 & 4	ALUMINIUM		SG IRON	
	Model Code	*List Price*	*Model Code*	*List Price*
.375 NPTF	**NMB**		**NMB/S**	
.50 NPTF	**NMC**		**NMC/S**	
.75 NPTF	**NMD**		**NMD/S**	
SAE-6	**NMJ**		**NMJ/S**	
SAE-8	**NMK**		**NMK/S**	
SAE-10	**NML**		**NML/S**	
.375 BSPP	**NMU**		**NMU/S**	
.50 BSPP	**NMV**		**NMV/S**	
.75 BSPP	**NMW**		**NMW/S**	

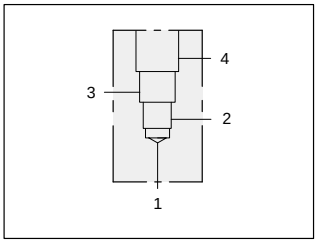

Instructions for ordering complete cartridge and body assemblies. Page viii

Pressure ratings, material specifications. Page 11.02

Four port body.

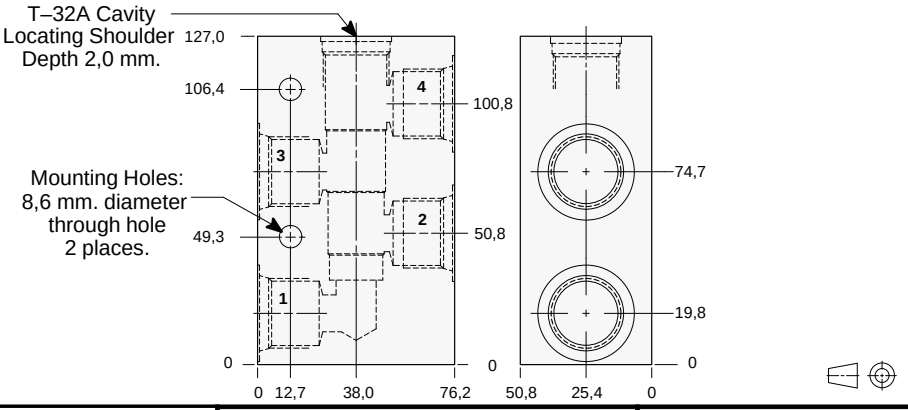

Ports 1,2, 3,4 & 5	ALUMINIUM		SG IRON	
	Model Code	*List Price*	*Model Code*	*List Price*
.375 NPTF	**NNB**		**NNB/S**	
.50 NPTF	**NNC**		**NNC/S**	
.75 NPTF	**NND**		**NND/S**	
SAE-8	**NNJ**		**NNJ/S**	
SAE-10	**NNK**		**NNK/S**	
SAE-12	**NNL**		**NNL/S**	
.375 BSPP	**NNU**		**NNU/S**	
.50 BSPP	**NNV**		**NNV/S**	
.75 BSPP	**NNW**		**NNW/S**	

LINE MOUNT BODIES

- Aluminium rated to 210 bar and SG Iron rated to 350 bar.

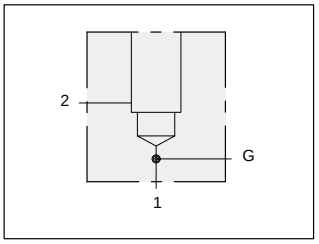

90 degree body with gauge port.

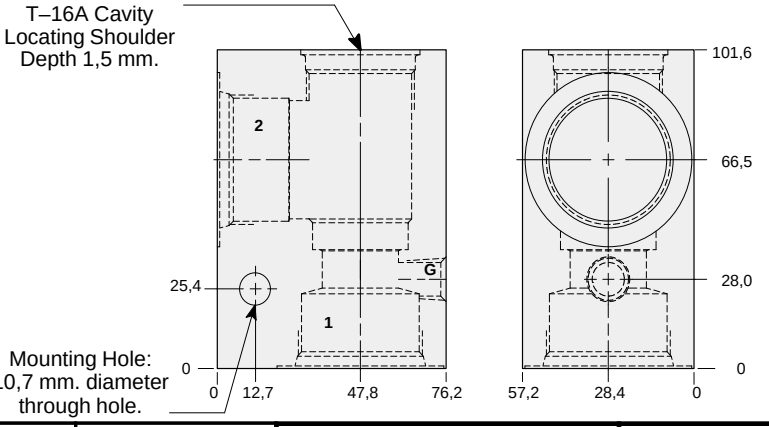

TYPICAL CARTRIDGES USED WITH THIS BODY

RPIC - *** Page 1.07
RPIE - *** Page 1.09
RDHA - *** Page 1.11
RQIB - *** Page 1.13
RPID - *** Page 1.15
CXHA - *** Page 5.09
CXGD - *** Page 5.11
NFEC - *** Page 5.13
CNGC - *** Page 5.15
NCFB - *** Page 5.17
NCFC - *** Page 5.19
FXEA - *** Page 5.21
FCEB - *** Page 5.23
FDEA - *** Page 5.25
FQGA - *** Page 10.15

Instructions for ordering complete cartridge and body assemblies. Page iii

Pressure ratings, material specifications. Page 11.02

Ports 1 & 2	*Gauge Port*	ALUMINIUM		SG IRON	
		Model Code	*List Price*	*Model Code*	*List Price*
.75 NPTF	.25 NPTF	**IAD**		**IAD/S**	
1.00 NPTF	.25 NPTF	**IAE**		**IAE/S**	
1.25 NPTF	.25 NPTF	**IAF**		**IAF/S**	
SAE-12	.25 NPTF	**IAL**		**IAL/S**	
SAE-16	.25 NPTF	**IAM**		**IAM/S**	
SAE-20	.25 NPTF	**IAN**		**IAN/S**	
.75 BSPP	.25 BSPP	**IAW**		**IAW/S**	
1.00 BSPP	.25 BSPP	**IAX**		**IAX/S**	
1.25 BSPP	.25 BSPP	**IAY**		**IAY/S**	

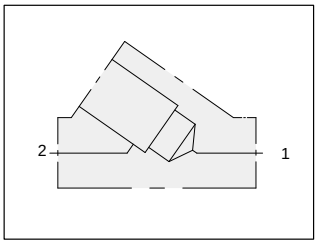

Inline body.

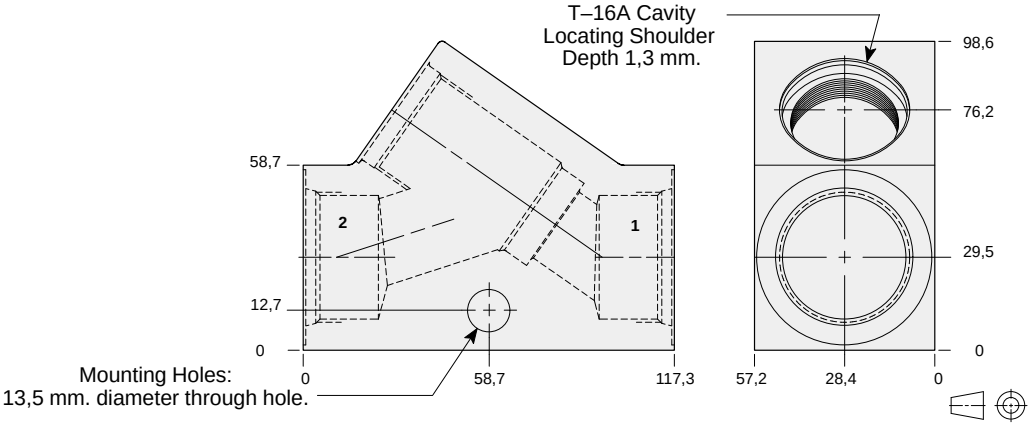

TYPICAL CARTRIDGES USED WITH THIS BODY

RPIC - *** Page 1.07
RPIE - *** Page 1.09
RDHA - *** Page 1.11
RQIB - *** Page 1.13
RPID - *** Page 1.15
CXHA - *** Page 5.09
CXGD - *** Page 5.11
NFEC - *** Page 5.13
CNGC - *** Page 5.15
NCFB - *** Page 5.17
NCFC - *** Page 5.19
FXEA - *** Page 5.21
FCEB - *** Page 5.23
FDEA - *** Page 5.25
FQGA - *** Page 10.15

Instructions for ordering complete cartridge and body assemblies. Page iii

Pressure ratings, material specifications. Page 11.02

Ports 1 & 2	ALUMINIUM		SG IRON	
	Model Code	*List Price*	*Model Code*	*List Price*
.75 NPTF	**ICD**		**ICD/S**	
1.00 NPTF	**ICE**		**ICE/S**	
1.25 NPTF	**ICF**		**ICF/S**	
SAE-12	**ICL**		**ICL/S**	
SAE-16	**ICM**		**ICM/S**	
SAE-20	**ICN**		**ICN/S**	
.75 BSPP	**ICW**		**ICW/S**	
1.00 BSPP	**ICX**		**ICX/S**	
1.25 BSPP	**ICY**		**ICY/S**	

LINE MOUNT BODIES

- Aluminium rated to 210 bar and SG Iron rated to 350 bar.

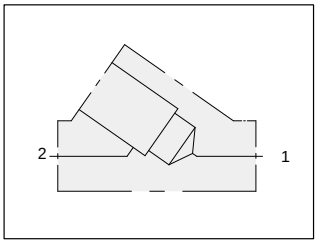

Inline 1.00” SAE Code 61 flange port body.

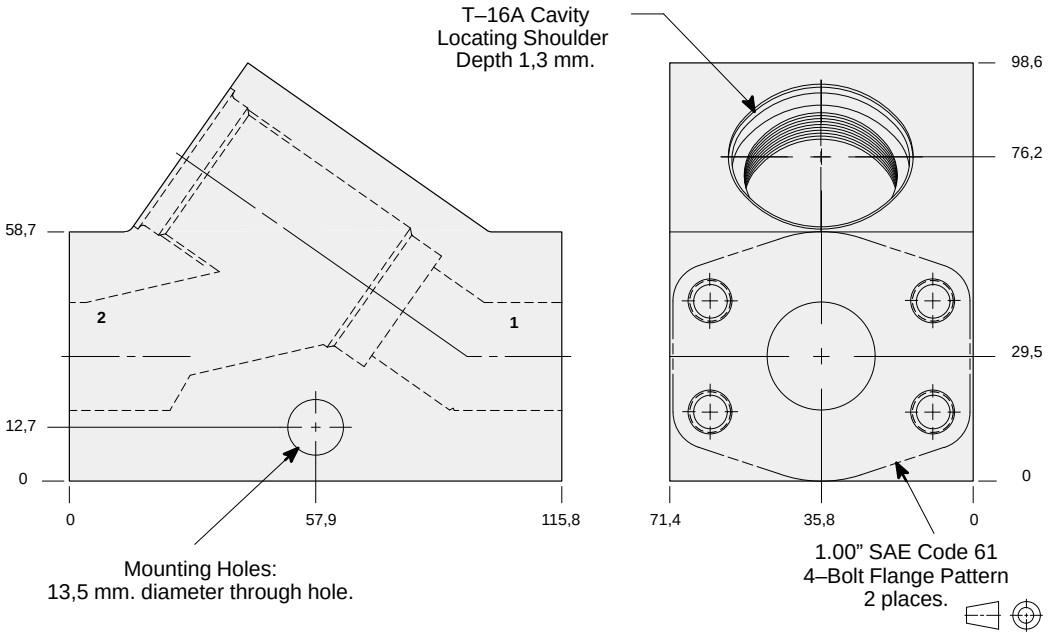

TYPICAL CARTRIDGES USED WITH THIS BODY

RPIC - *** Page 1.07
RPIE - *** Page 1.09
RDHA - *** Page 1.11
RQIB - *** Page 1.13
RPID - *** Page 1.15
CXHA - *** Page 5.09
CXGD - *** Page 5.11
NFEC - *** Page 5.13
CNGC - *** Page 5.15
NCFB - *** Page 5.17
NCFC - *** Page 5.19
FXEA - *** Page 5.21
FCEB - *** Page 5.23
FDEA - *** Page 5.25
FQGA - *** Page 10.15

Instructions for ordering complete cartridge and body assemblies. Page viii
Pressure ratings, material specifications. Page 11.02
SAE Specifications. Page 11.03

Mounting Hole Dimensions	ALUMINIUM		SG IRON	
	Model Code	*List Price*	*Model Code*	*List Price*
Inch	**ICP**		**ICP/S**	
Metric	**ICP/M**		**ICP/T**	

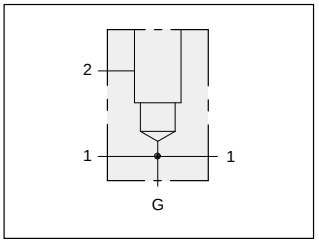

Through port body with gauge port.

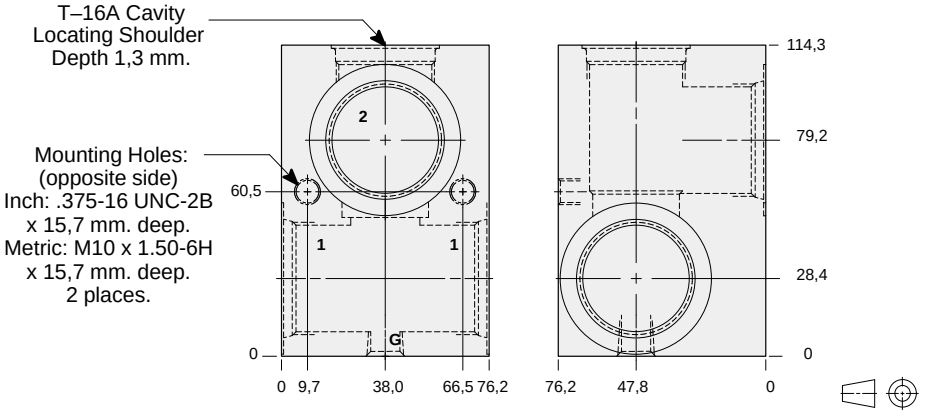

TYPICAL CARTRIDGES USED WITH THIS BODY

RPIC - *** Page 1.07
RPIE - *** Page 1.09
RDHA - *** Page 1.11
RQIB - *** Page 1.13
RPID - *** Page 1.15
NFEC - *** Page 5.13
CNGC - *** Page 5.15
NCFB - *** Page 5.17
NCFC - *** Page 5.19
FXEA - *** Page 5.21
FCEB - *** Page 5.23
FDEA - *** Page 5.25

Instructions for ordering complete cartridge and body assemblies. Page viii
Pressure ratings, material specifications. Page 11.02

Mounting Hole Dimensions	*Ports 1 & 2*	*Gauge Port*	ALUMINIUM		SG IRON	
			Model Code	*List Price*	*Model Code*	*List Price*
Inch	.75 NPTF	.25 NPTF	**IED**		**IED/S**	
Inch	1.00 NPTF	.25 NPTF	**IEE**		**IEE/S**	
Inch	1.25 NPTF	.25 NPTF	**IEF**		**IEF/S**	
Inch	SAE-12	.25 NPTF	**IEL**		**IEL/S**	
Inch	SAE-16	.25 NPTF	**IEM**		**IEM/S**	
Inch	SAE-20	.25 NPTF	**IEN**		**IEN/S**	
Metric	.75 BSPP	.25 BSPP	**IEW**		**IEW/S**	
Metric	1.00 BSPP	.25 BSPP	**IEX**		**IEX/S**	
Metric	1.25 BSPP	.25 BSPP	**IEY**		**IEY/S**	

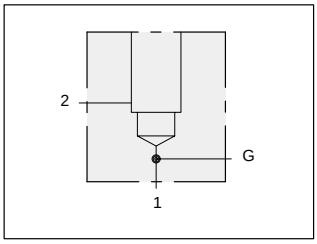

90 degree 1.00” SAE Code 61 flange port body with gauge port.

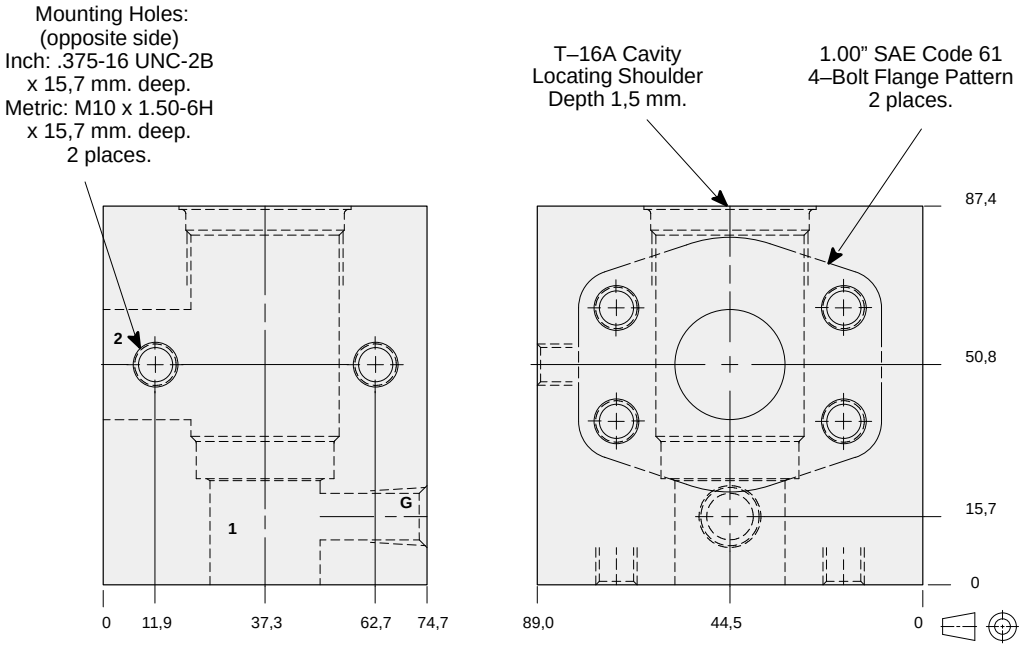

TYPICAL CARTRIDGES USED WITH THIS BODY

RPIC	- ***	Page	1.07
RPIE	- ***	Page	1.09
RDHA	- ***	Page	1.11
RQIB	- ***	Page	1.13
RPID	- ***	Page	1.15
CXHA	- ***	Page	5.09
CXGD	- ***	Page	5.11
NFEC	- ***	Page	5.13
CNGC	- ***	Page	5.15
NCFB	- ***	Page	5.17
NCFC	- ***	Page	5.19
FXEA	- ***	Page	5.21
FCEB	- ***	Page	5.23
FDEA	- ***	Page	5.25
FQGA	- ***	Page	10.15

Instructions for ordering complete cartridge and body assemblies. Page viii

Pressure ratings, material specifications. Page 11.02

SAE Specifications. Page 11.03

Mounting Hole Dimensions	*Gauge Port*	ALUMINIUM		SG IRON	
		Model Code	*List Price*	*Model Code*	*List Price*
Inch	.25 NPTF	**IAP**		**IAP/S**	
Metric	.25 BSPP	**IAP/M**		**IAP/T**	

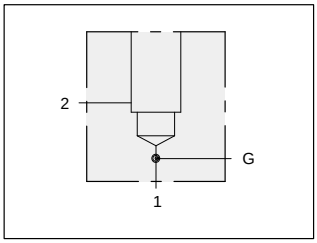

90 degree 1.00” SAE Code 62 flange port body with gauge port.

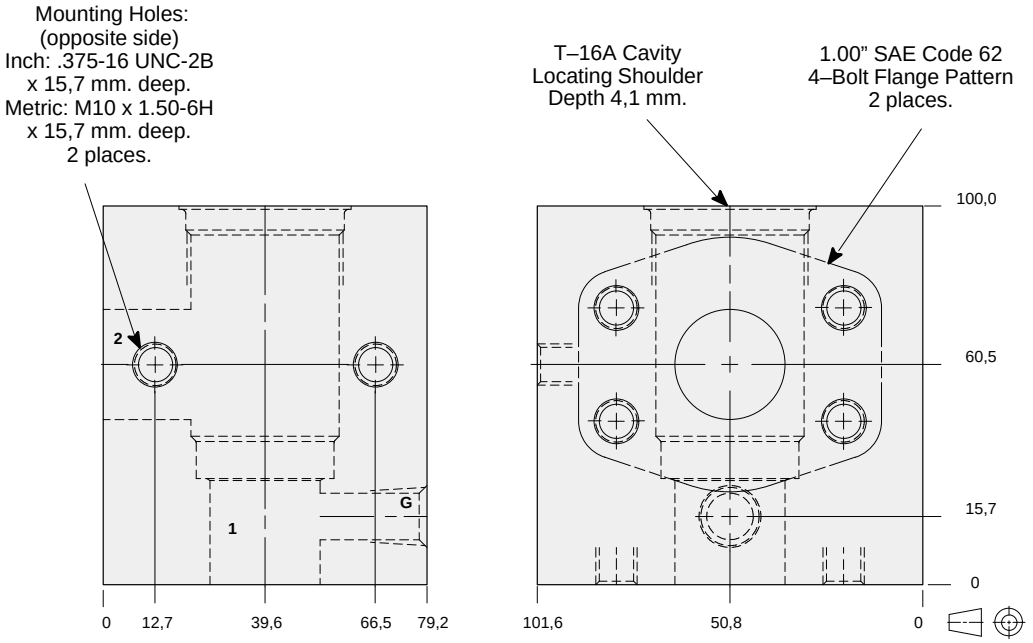

TYPICAL CARTRIDGES USED WITH THIS BODY

RPIC	- ***	Page	1.07
RPIE	- ***	Page	1.09
RDHA	- ***	Page	1.11
RQIB	- ***	Page	1.13
RPID	- ***	Page	1.15
CXHA	- ***	Page	5.09
CXGD	- ***	Page	5.11
NFEC	- ***	Page	5.13
CNGC	- ***	Page	5.15
NCFB	- ***	Page	5.17
NCFC	- ***	Page	5.19
FXEA	- ***	Page	5.21
FCEB	- ***	Page	5.23
FDEA	- ***	Page	5.25
FQGA	- ***	Page	10.15

Instructions for ordering complete cartridge and body assemblies. Page viii

Pressure ratings, material specifications. Page 11.02

SAE Specifications. Page 11.03

Mounting Hole Dimensions	*Gauge Port*	ALUMINIUM		SG IRON	
		Model Code	*List Price*	*Model Code*	*List Price*
Inch	.25 NPTF	**IA4**		**IA4/S**	
Metric	.25 BSPP	**IA4/M**		**IA4/T**	

LINE MOUNT BODIES

- Aluminium rated to 210 bar and SG Iron rated to 350 bar.

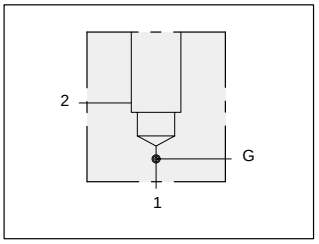

90 degree 1.25” SAE Code 61 flange port body with gauge port.

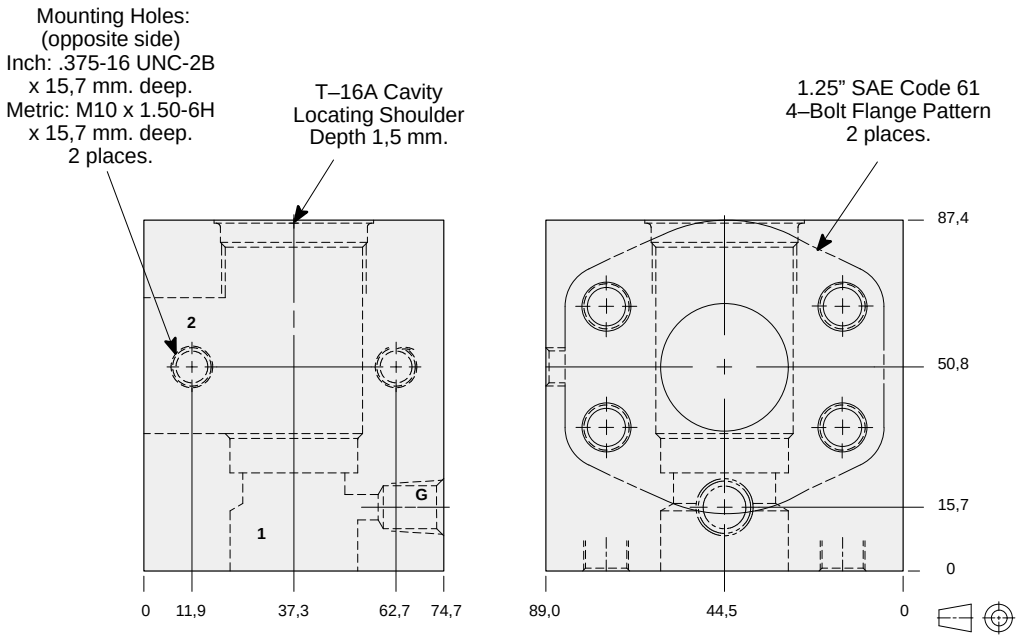

TYPICAL CARTRIDGES USED WITH THIS BODY

RPIC	- ***	Page	1.07
RPIE	- ***	Page	1.09
RDHA	- ***	Page	1.11
RQIB	- ***	Page	1.13
RPID	- ***	Page	1.15
CXHA	- ***	Page	5.09
CXGD	- ***	Page	5.11
NFEC	- ***	Page	5.13
CNGC	- ***	Page	5.15
NCFB	- ***	Page	5.17
NCFC	- ***	Page	5.19
FXEA	- ***	Page	5.21
FCEB	- ***	Page	5.23
FDEA	- ***	Page	5.25
FQGA	- ***	Page	10.15

Instructions for ordering complete cartridge and body assemblies. Page viii

Pressure ratings, material specifications. Page 11.02

SAE Specifications. Page 11.03

Mounting Hole Dimensions	*Gauge Port*	ALUMINIUM		SG IRON	
		Model Code	*List Price*	*Model Code*	*List Price*
Inch	.25 NPTF	**IAQ**		**IAQ/S**	
Metric	.25 BSPP	**IAQ/M**		**IAQ/T**	

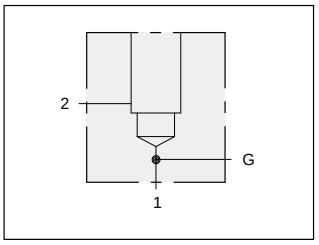

90 degree 1.25” SAE Code 62 flange port body with gauge port.

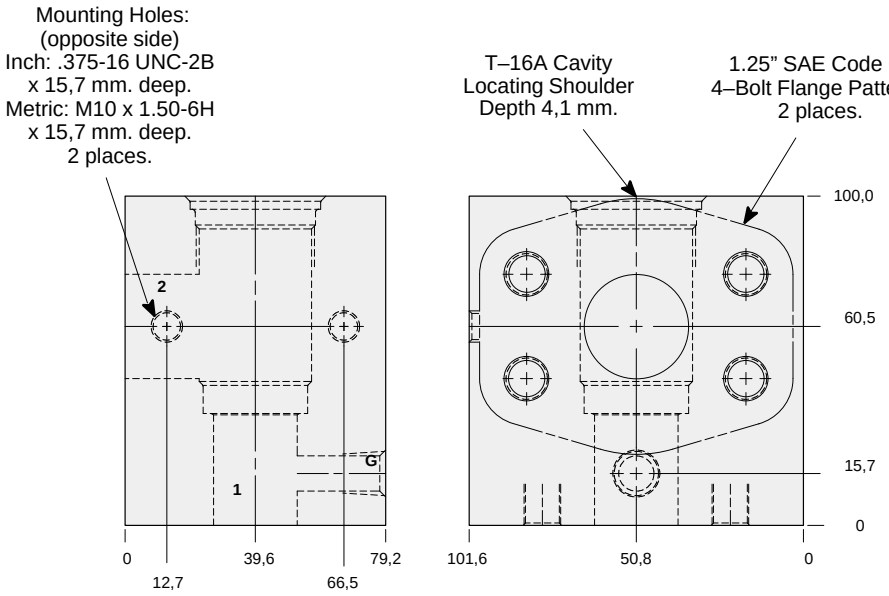

TYPICAL CARTRIDGES USED WITH THIS BODY

RPIC	- ***	Page	1.07
RPIE	- ***	Page	1.09
RDHA	- ***	Page	1.11
RQIB	- ***	Page	1.13
RPID	- ***	Page	1.15
CXHA	- ***	Page	5.09
CXGD	- ***	Page	5.11
NFEC	- ***	Page	5.13
CNGC	- ***	Page	5.15
NCFB	- ***	Page	5.17
NCFC	- ***	Page	5.19
FXEA	- ***	Page	5.21
FCEB	- ***	Page	5.23
FDEA	- ***	Page	5.25
FQGA	- ***	Page	10.15

Instructions for ordering complete cartridge and body assemblies. Page viii

Pressure ratings, material specifications. Page 11.02

SAE Specifications. Page 11.03

Mounting Hole Dimensions	*Gauge Port*	ALUMINIUM		SG IRON	
		Model Code	*List Price*	*Model Code*	*List Price*
Inch	.25 NPTF	**IA5**		**IA5/S**	
Metric	.25 BSPP	**IA5/M**		**IA5/T**	

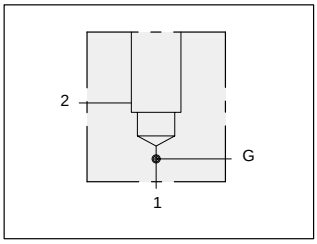

90 degree 1.50” SAE Code 61 flange port body with gauge port.

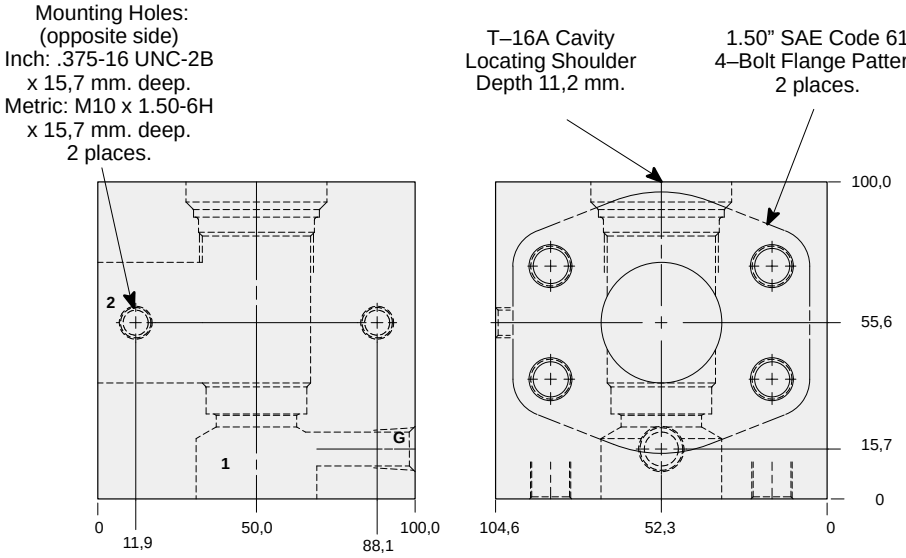

TYPICAL CARTRIDGES USED WITH THIS BODY

RPIC	- ***	Page	1.07
RPIE	- ***	Page	1.09
RDHA	- ***	Page	1.11
RQIB	- ***	Page	1.13
RPID	- ***	Page	1.15
CXHA	- ***	Page	5.09
CXGD	- ***	Page	5.11
NFEC	- ***	Page	5.13
CNGC	- ***	Page	5.15
NCFB	- ***	Page	5.17
NCFC	- ***	Page	5.19
FXEA	- ***	Page	5.21
FCEB	- ***	Page	5.23
FDEA	- ***	Page	5.25
FQGA	- ***	Page	10.15

Instructions for ordering complete cartridge and body assemblies. Page viii

Pressure ratings, material specifications. Page 11.02

SAE Specifications. Page 11.03

Mounting Hole Dimensions	*Gauge Port*	ALUMINIUM		SG IRON	
		Model Code	*List Price*	*Model Code*	*List Price*
Inch	.25 NPTF	**IAR**		**IAR/S**	
Metric	.25 BSPP	**IAR/M**		**IAR/T**	

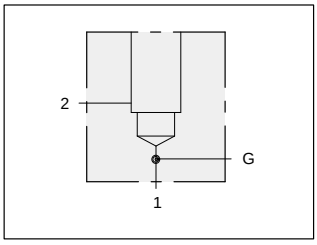

90 degree 1.50” SAE Code 62 flange port body with gauge port.

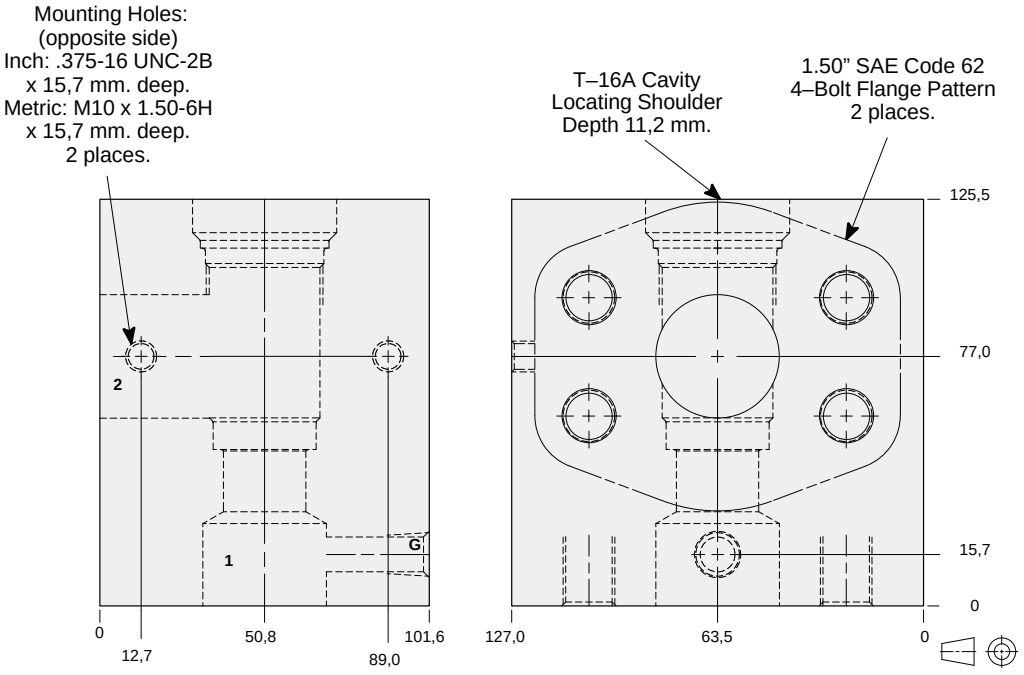

TYPICAL CARTRIDGES USED WITH THIS BODY

RPIC	- ***	Page	1.07
RPIE	- ***	Page	1.09
RDHA	- ***	Page	1.11
RQIB	- ***	Page	1.13
RPID	- ***	Page	1.15
CXHA	- ***	Page	5.09
CXGD	- ***	Page	5.11
NFEC	- ***	Page	5.13
CNGC	- ***	Page	5.15
NCFB	- ***	Page	5.17
FXEA	- ***	Page	5.21
FCEB	- ***	Page	5.23
FDEA	- ***	Page	5.25
FQGA	- ***	Page	10.15

Instructions for ordering complete cartridge and body assemblies. Page viii

Pressure ratings, material specifications. Page 11.02

SAE Specifications. Page 11.03

Mounting Hole Dimensions	*Gauge Port*	ALUMINIUM		SG IRON	
		Model Code	*List Price*	*Model Code*	*List Price*
Inch	.25 NPTF	**IA6**		**IA6/S**	
Metric	.25 BSPP	**IA6/M**		**IA6/T**	

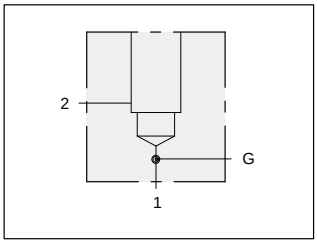

90 degree 2.00” SAE Code 61 flange port body with gauge port.

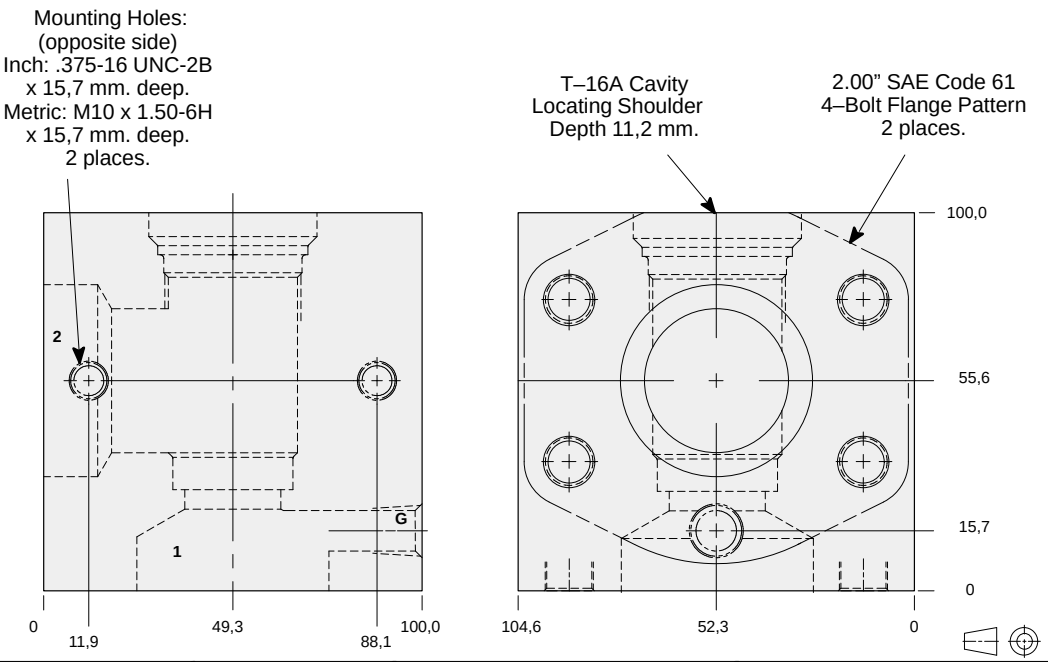

Mounting Hole Dimensions	*Gauge Port*	ALUMINIUM		SG IRON	
		Model Code	*List Price*	*Model Code*	*List Price*
Inch	.25 NPTF	**IAS**		**IAS/S**	
Metric	.25 BSPP	**IAS/M**		**IAS/T**	

TYPICAL CARTRIDGES USED WITH THIS BODY

RPIC	- ***	Page	1.07
RPIE	- ***	Page	1.09
RDHA	- ***	Page	1.11
RQIB	- ***	Page	1.13
RPID	- ***	Page	1.15
CXHA	- ***	Page	5.09
CXGD	- ***	Page	5.11
NFEC	- ***	Page	5.13
CNGC	- ***	Page	5.15
NCGB	- ***	Page	5.17
NCFC	- ***	Page	5.19
FXEA	- ***	Page	5.21
FCEB	- ***	Page	5.23
FDEA	- ***	Page	5.25
FQGA	- ***	Page	10.15

Instructions for ordering complete cartridge and body assemblies. Page viii

Pressure ratings, material specifications. Page 11.02

SAE Specifications. Page 11.03

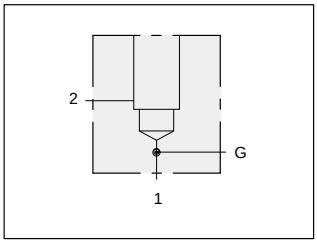

90 degree 2.00” SAE Code 62 flange port body with gauge port.

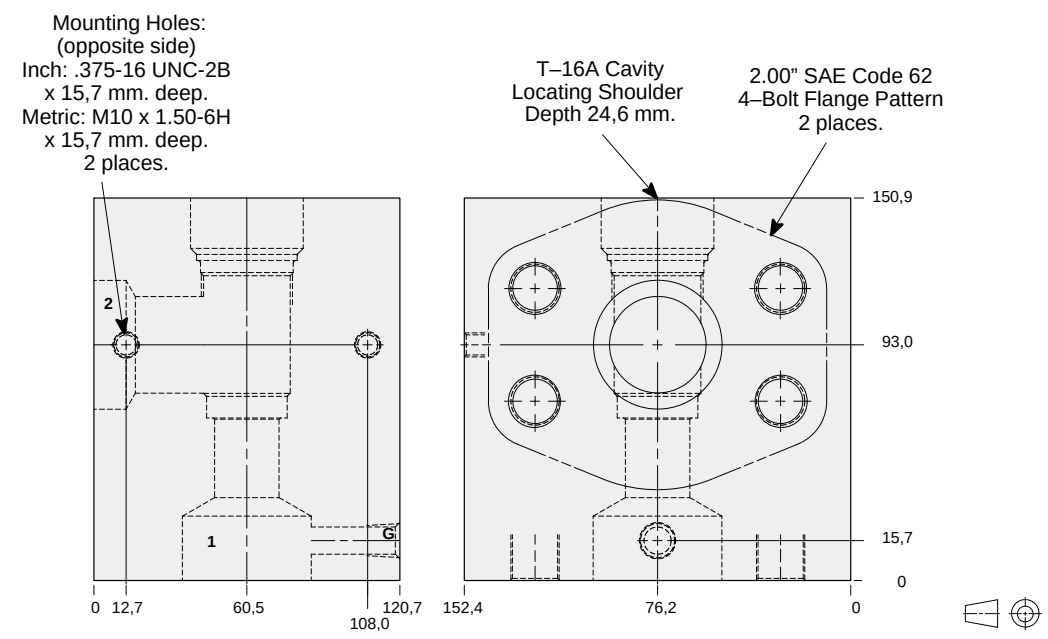

Mounting Hole Dimensions	*Gauge Port*	ALUMINIUM		SG IRON	
		Model Code	*List Price*	*Model Code*	*List Price*
Inch	.25 NPTF	**IA8**		**IA8/S**	
Metric	.25 BSPP	**IA8/M**		**IA8/T**	

TYPICAL CARTRIDGES USED WITH THIS BODY

RPIC	- ***	Page	1.07
RPIE	- ***	Page	1.09
RDHA	- ***	Page	1.11
RQIB	- ***	Page	1.13
RPID	- ***	Page	1.15
CXHA	- ***	Page	5.09
CXGD	- ***	Page	5.11
NFEC	- ***	Page	5.13
CNGC	- ***	Page	5.15
NCGB	- ***	Page	5.17
NCFC	- ***	Page	5.19
FXEA	- ***	Page	5.21
FCEB	- ***	Page	5.23
FDEA	- ***	Page	5.25
FQGA	- ***	Page	10.15

Instructions for ordering complete cartridge and body assemblies. Page viii

Pressure ratings, material specifications. Page 11.02

SAE Specifications. Page 11.03

LINE MOUNT BODIES

- Aluminium rated to 210 bar and SG Iron rated to 350 bar.

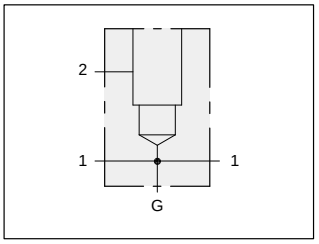

Through port 1.00” SAE Code 61 flange port body with gauge port.

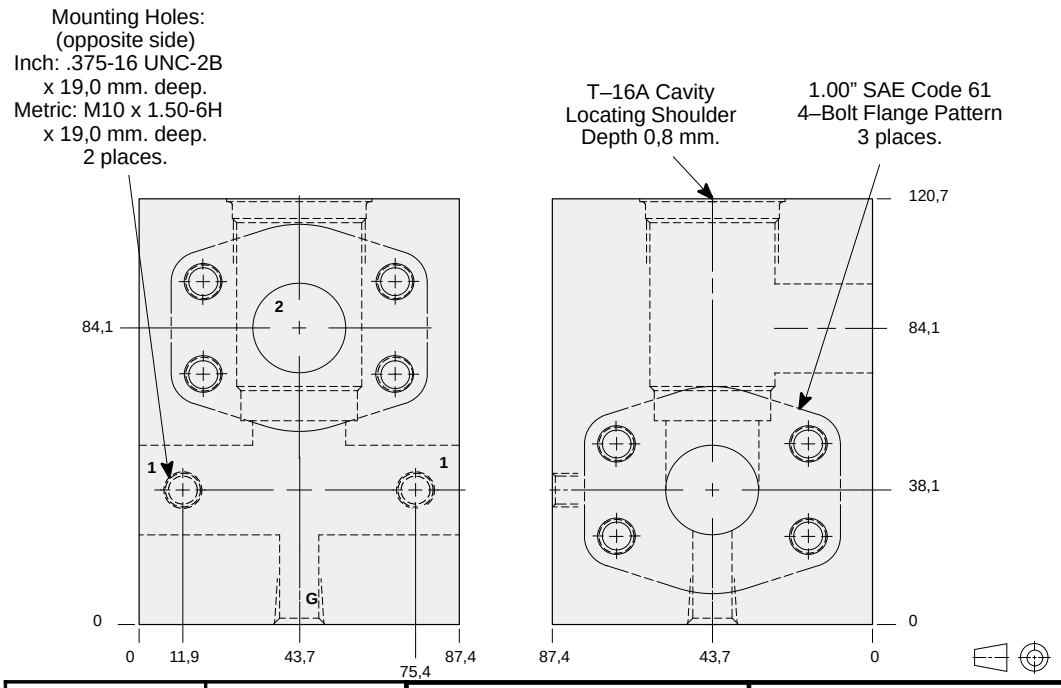

Mounting Hole Dimensions	Gauge Port	ALUMINIUM		SG IRON	
		Model Code	List Price	Model Code	List Price
Inch	.25 NPTF	**IEP**		**IEP/S**	
Metric	.25 BSPP	**IEP/M**		**IEP/T**	

TYPICAL CARTRIDGES USED WITH THIS BODY

RPIC	- ***	Page	1.07
RPIE	- ***	Page	1.09
RDHA	- ***	Page	1.11
RQIB	- ***	Page	1.13
RPID	- ***	Page	1.15
NFEC	- ***	Page	5.13
CNGC	- ***	Page	5.15
NCFB	- ***	Page	5.17
NCFC	- ***	Page	5.19
FXEA	- ***	Page	5.21
FCEB	- ***	Page	5.23
FDEA	- ***	Page	5.25

Instructions for ordering complete cartridge and body assemblies. Page viii

Pressure ratings, material specifications. Page 11.02

SAE Specifications. Page 11.03

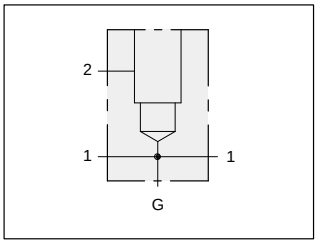

Through port 1.00” SAE Code 62 flange port body with gauge port.

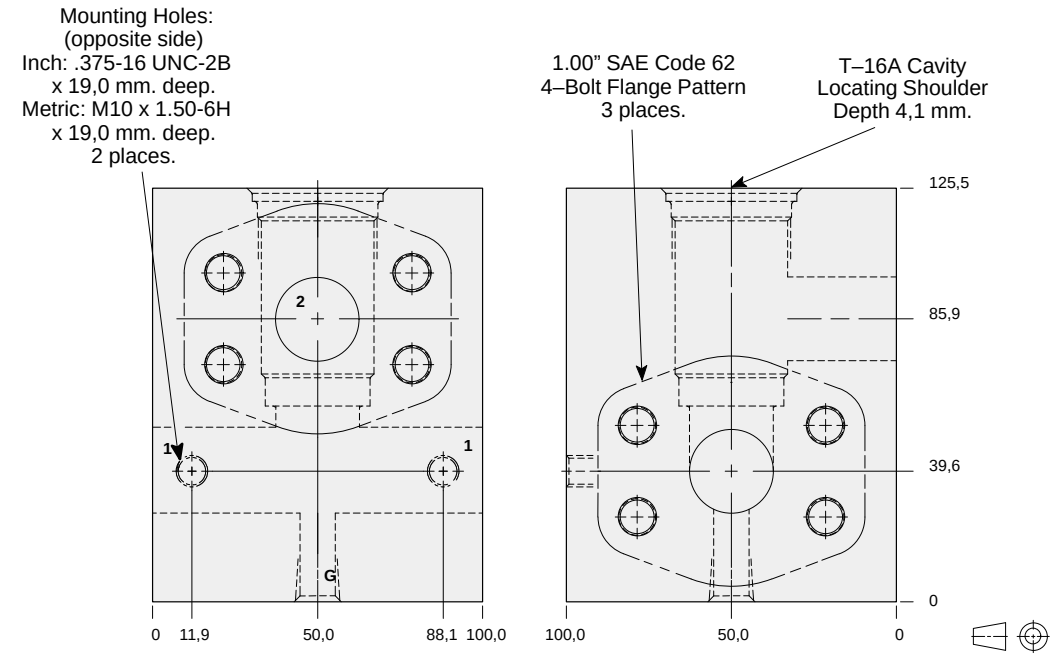

Mounting Hole Dimensions	Gauge Port	ALUMINIUM		SG IRON	
		Model Code	List Price	Model Code	List Price
Inch	.25 NPTF	**IE4**		**IE4/S**	
Metric	.25 BSPP	**IE4/M**		**IE4/T**	

TYPICAL CARTRIDGES USED WITH THIS BODY

RPIC	- ***	Page	1.07
RPIE	- ***	Page	1.09
RDHA	- ***	Page	1.11
RQIB	- ***	Page	1.13
RPID	- ***	Page	1.15
NFEC	- ***	Page	5.13
CNGC	- ***	Page	5.15
NCFB	- ***	Page	5.17
NCFC	- ***	Page	5.19
FXEA	- ***	Page	5.21
FCEB	- ***	Page	5.23
FDEA	- ***	Page	5.25

Instructions for ordering complete cartridge and body assemblies. Page viii

Pressure ratings, material specifications. Page 11.02

SAE Specifications. Page 11.03

Through port 1.25” SAE Code 61 flange port body with gauge port.

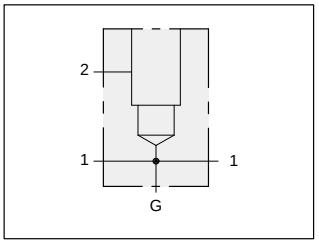

TYPICAL CARTRIDGES USED WITH THIS BODY

RPIC	- ***	Page	1.07
RPIE	- ***	Page	1.09
RDHA	- ***	Page	1.11
RQIB	- ***	Page	1.13
RPID	- ***	Page	1.15
NFEC	- ***	Page	5.13
CNGC	- ***	Page	5.15
NCFB	- ***	Page	5.17
NCFC	- ***	Page	5.19
FXEA	- ***	Page	5.21
FCEB	- ***	Page	5.23
FDEA	- ***	Page	5.25

Instructions for ordering complete cartridge and body assemblies. Page viii

Pressure ratings, material specifications. Page 11.02

SAE Specifications. Page 11.03

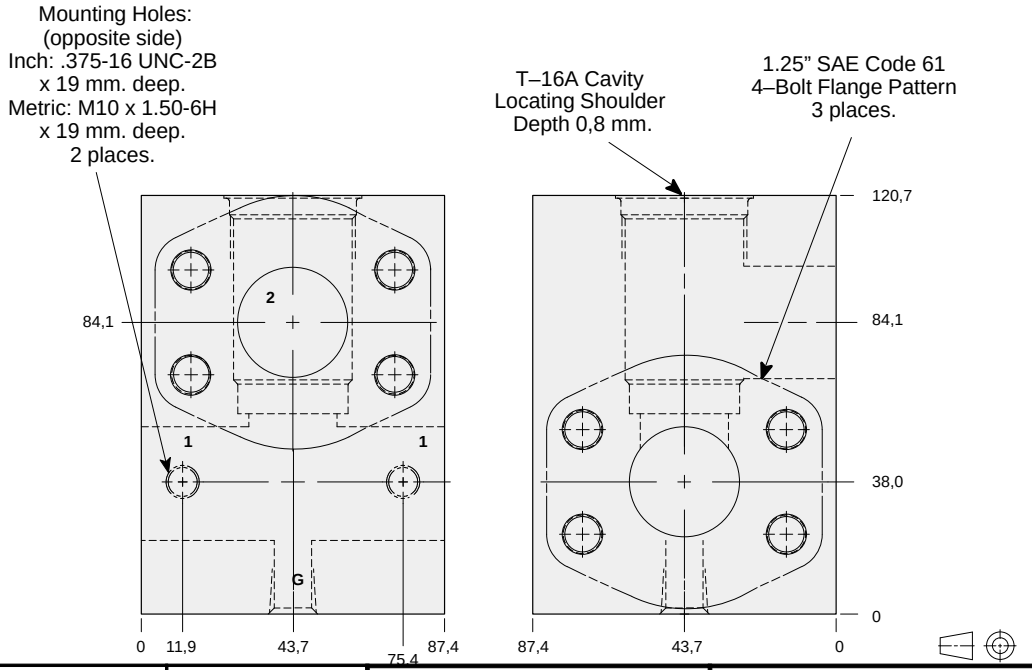

Mounting Hole Dimensions	*Gauge Port*	ALUMINIUM		SG IRON	
		Model Code	*List Price*	*Model Code*	*List Price*
Inch	.25 NPTF	**IEQ**		**IEQ/S**	
Metric	.25 BSPP	**IEQ/M**		**IEQ/T**	

Through port 1.25” SAE Code 62 flange port body with gauge port.

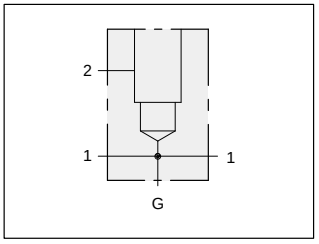

TYPICAL CARTRIDGES USED WITH THIS BODY

RPIC	- ***	Page	1.07
RPIE	- ***	Page	1.09
RDHA	- ***	Page	1.11
RQIB	- ***	Page	1.13
RPID	- ***	Page	1.15
NFEC	- ***	Page	5.13
CNGC	- ***	Page	5.15
NCFB	- ***	Page	5.17
NCFC	- ***	Page	5.19
FXEA	- ***	Page	5.21
FCEB	- ***	Page	5.23
FDEA	- ***	Page	5.25

Instructions for ordering complete cartridge and body assemblies. Page viii

Pressure ratings, material specifications. Page 11.02

SAE Specifications. Page 11.03

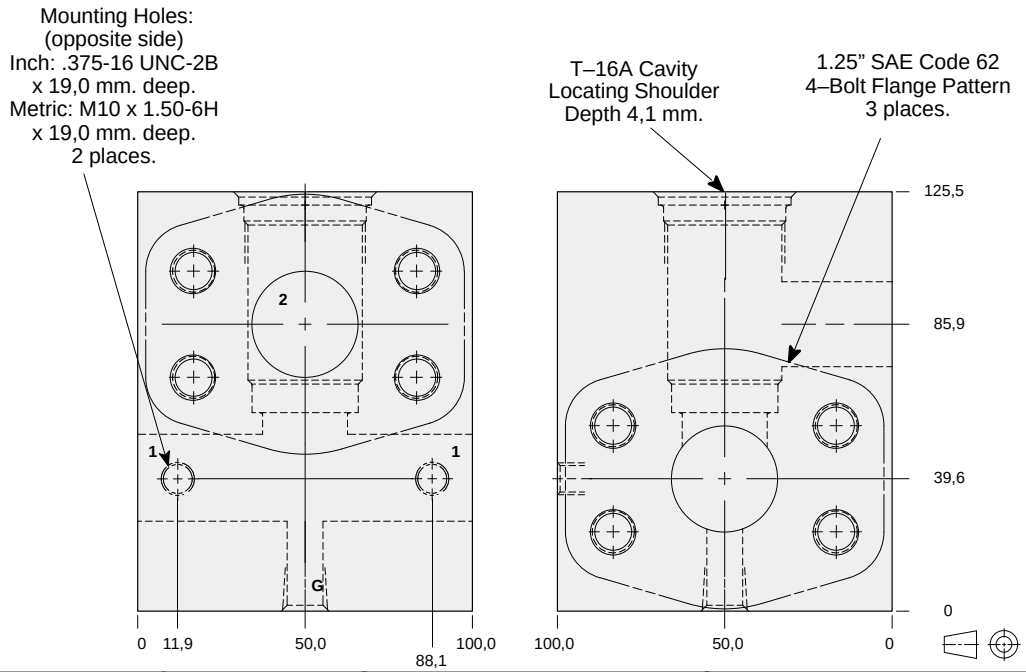

Mounting Hole Dimensions	*Gauge Port*	ALUMINIUM		SG IRON	
		Model Code	*List Price*	*Model Code*	*List Price*
Inch	.25 NPTF	**IE5**		**IE5/S**	
Metric	.25 BSPP	**IE5/M**		**IE5/T**	

LINE MOUNT BODIES

- Aluminium rated to 210 bar and SG Iron rated to 350 bar.

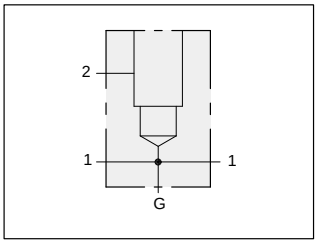

TYPICAL CARTRIDGES USED WITH THIS BODY

RPIC	- ***	Page	1.07
RPIE	- ***	Page	1.09
RDHA	- ***	Page	1.11
RQIB	- ***	Page	1.13
RPID	- ***	Page	1.15
NFEC	- ***	Page	5.13
CNCG	- ***	Page	5.15
NCFB	- ***	Page	5.17
NCFC	- ***	Page	5.19
FXEA	- ***	Page	5.21
FCEB	- ***	Page	5.23
FDEA	- ***	Page	5.25

Instructions for ordering complete cartridge and body assemblies. Page viii

Pressure ratings, material specifications. Page 11.02

SAE Specifications. Page 11.03

Through port 1.50” SAE Code 61 flange port body with gauge port.

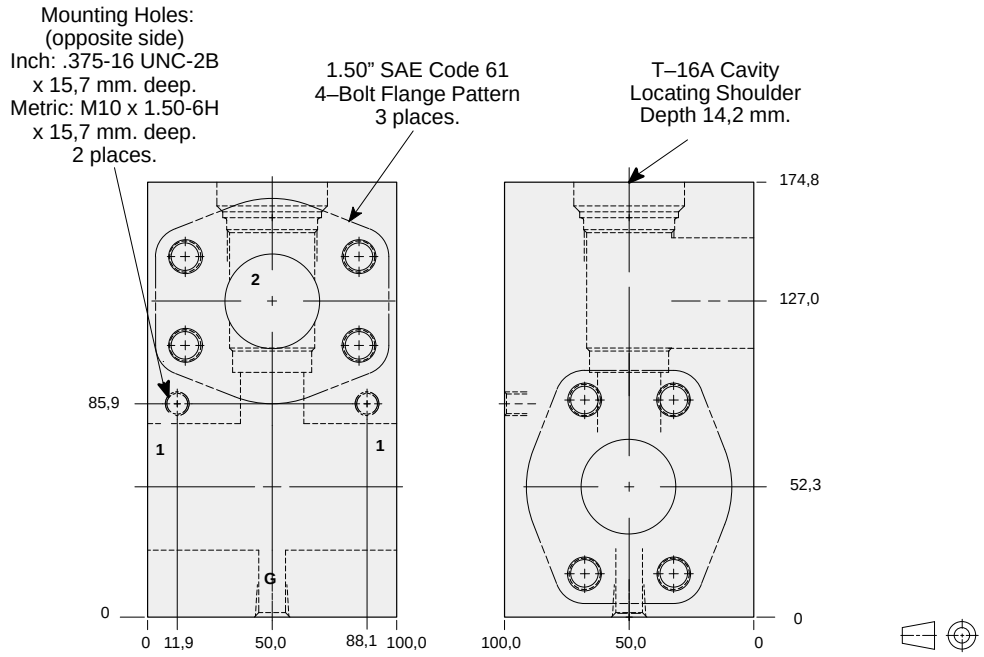

Mounting Hole Dimensions	*Gauge Port*	ALUMINIUM		SG IRON	
		Model Code	*List Price*	*Model Code*	*List Price*
Inch	.25 NPTF	**IER**		**IER/S**	
Metric	.25 BSPP	**IER/M**		**IER/T**	

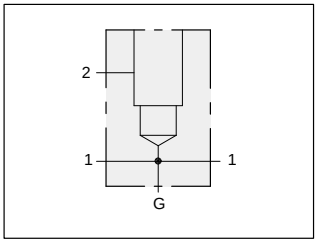

TYPICAL CARTRIDGES USED WITH THIS BODY

RPIC	- ***	Page	1.07
RPIE	- ***	Page	1.09
RDHA	- ***	Page	1.11
RQIB	- ***	Page	1.13
RPID	- ***	Page	1.15
NFEC	- ***	Page	5.13
CNCG	- ***	Page	5.15
NCFB	- ***	Page	5.17
NCFC	- ***	Page	5.19
FXEA	- ***	Page	5.21
FCEB	- ***	Page	5.23
FDEA	- ***	Page	5.25

Instructions for ordering complete cartridge and body assemblies. Page viii

Pressure ratings, material specifications. Page 11.02

SAE Specifications. Page 11.03

Through port 1.50” SAE Code 62 flange port body with gauge port.

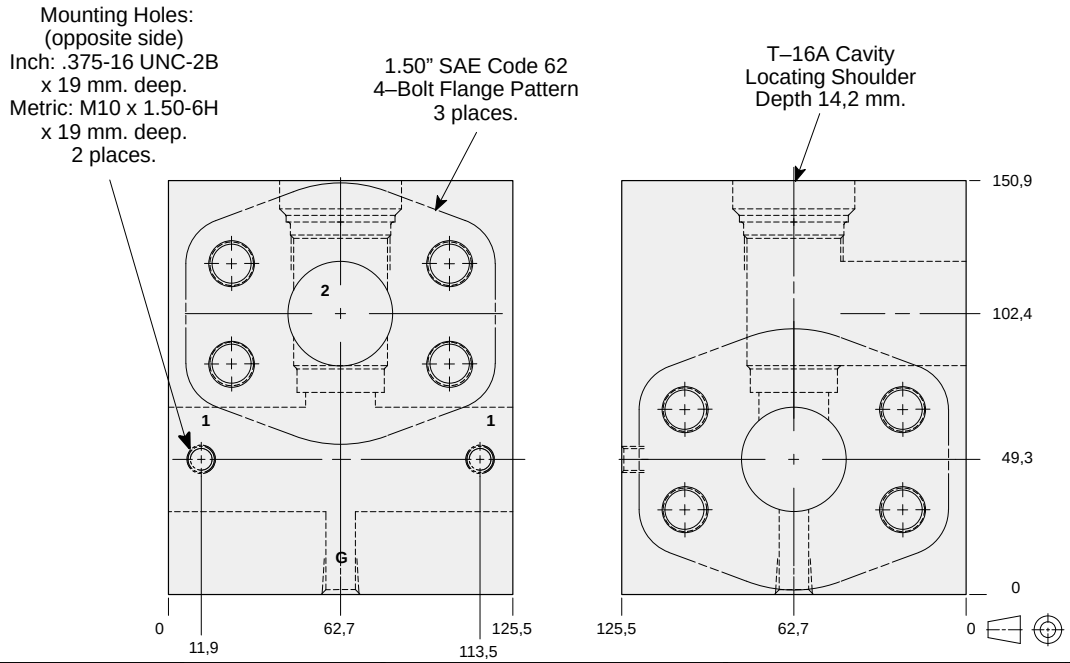

Mounting Hole Dimensions	*Gauge Port*	ALUMINIUM		SG IRON	
		Model Code	*List Price*	*Model Code*	*List Price*
Inch	.25 NPTF	**IE6**		**IE6/S**	
Metric	.25 BSPP	**IE6/M**		**IE6/T**	

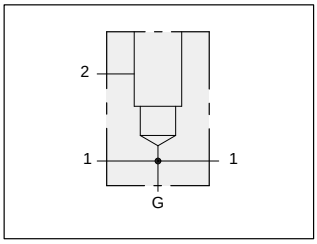

TYPICAL CARTRIDGES USED WITH THIS BODY

RPIC	- ***	Page	1.07
RPIE	- ***	Page	1.09
RDHA	- ***	Page	1.11
RQIB	- ***	Page	1.13
RPID	- ***	Page	1.15
NFEC	- ***	Page	5.13
CNCG	- ***	Page	5.15
NCFB	- ***	Page	5.17
NCFC	- ***	Page	5.19
FXEA	- ***	Page	5.21
FCEB	- ***	Page	5.23
FDEA	- ***	Page	5.25

Instructions for ordering complete cartridge and body assemblies. Page viii

Pressure ratings, material specifications. Page 11.02

SAE Specifications. Page 11.03

Through port 2.00” SAE Code 61 flange port body with gauge port.

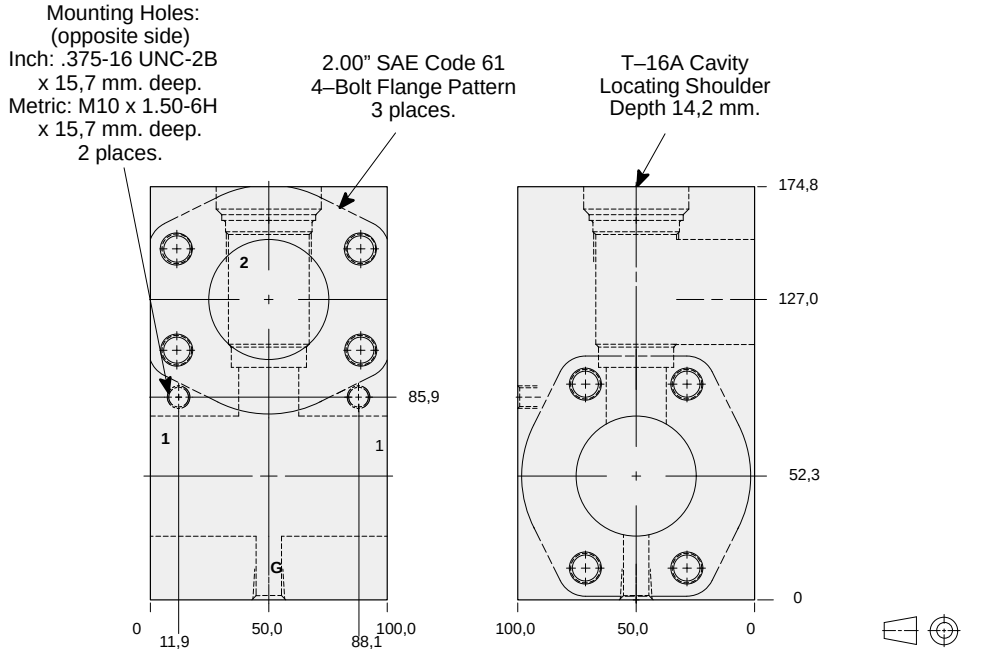

Mounting Hole Dimensions	*Gauge Port*	ALUMINIUM		SG IRON	
		Model Code	*List Price*	*Model Code*	*List Price*
Inch	.25 NPTF	**IES**		**IES/S**	
Metric	.25 BSPP	**IES/M**		**IES/T**	

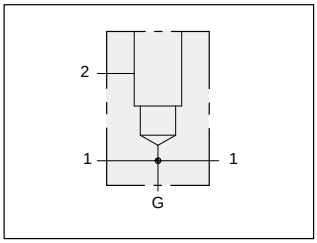

TYPICAL CARTRIDGES USED WITH THIS BODY

RPIC	- ***	Page	1.07
RPIE	- ***	Page	1.09
RDHA	- ***	Page	1.11
RQIB	- ***	Page	1.13
RPID	- ***	Page	1.15
NFEC	- ***	Page	5.13
CNCG	- ***	Page	5.15
NCFB	- ***	Page	5.17
NCFC	- ***	Page	5.19
FXEA	- ***	Page	5.21
FCEB	- ***	Page	5.23
FDEA	- ***	Page	5.25

Instructions for ordering complete cartridge and body assemblies. Page viii

Pressure ratings, material specifications. Page 11.02

SAE Specifications. Page 11.03

Through port 2.00” SAE Code 62 flange port body with gauge port.

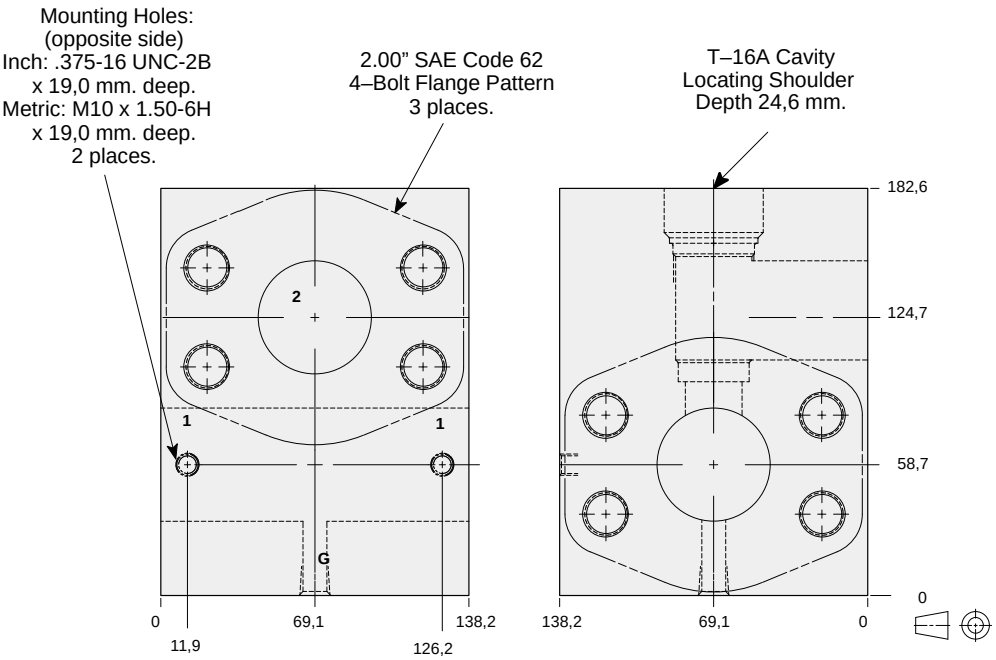

Mounting Hole Dimensions	*Gauge Port*	ALUMINIUM		SG IRON	
		Model Code	*List Price*	*Model Code*	*List Price*
Inch	.25 NPTF	**IE8**		**IE8/S**	
Metric	.25 BSPP	**IE8/M**		**IE8/T**	

LINE MOUNT BODIES

- Aluminium rated to 210 bar and SG Iron rated to 350 bar.

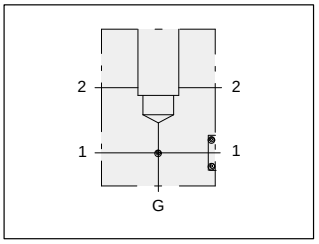

TYPICAL CARTRIDGES USED WITH THIS BODY

RPIC	- ***	Page	1.07
RPIE	- ***	Page	1.09
RDHA	- ***	Page	1.11
RQIB	- ***	Page	1.13
RPID	- ***	Page	1.15

Cartridge seal type determines O–ring type.

Instructions for ordering complete cartridge and body assemblies. Page viii

Pressure ratings, material specifications. Page 11.02

SAE Specifications. Page 11.03

Sandwich mount through port 1.50” SAE Code 61 body with gauge port.

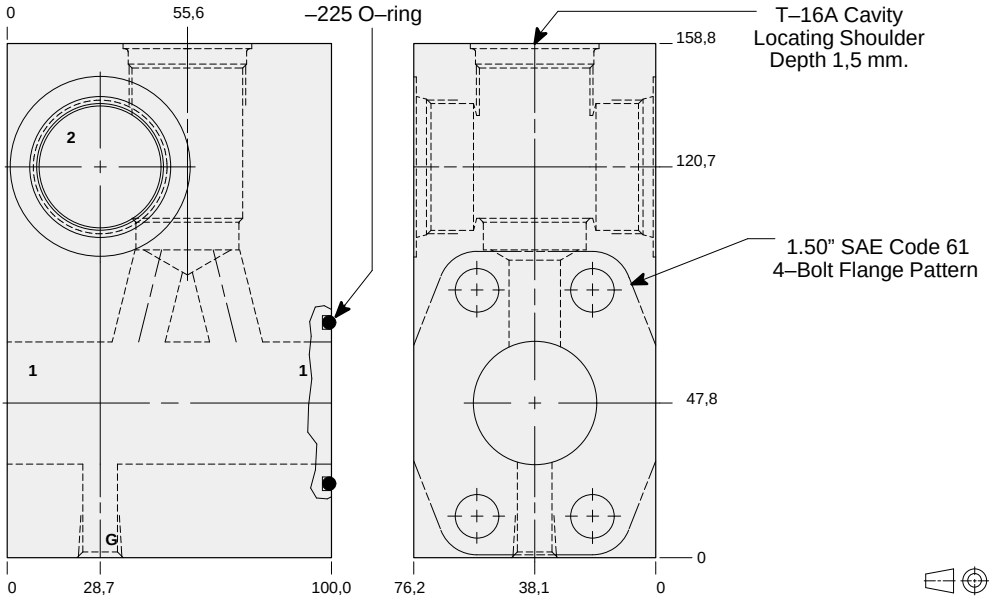

Mounting Hole Dimensions	*Port 2*	*Gauge Port*	ALUMINIUM		SG IRON	
			Model Code	*List Price*	*Model Code*	*List Price*
Inch	1.25 NPTF	.25 NPTF	**ZQD**		**ZQD/S**	
Inch	SAE-20	.25 NPTF	**ZQC**		**ZQC/S**	
Metric	1.25 BSPP	.25 BSPP	**ZQB/M**		**ZQB/T**	

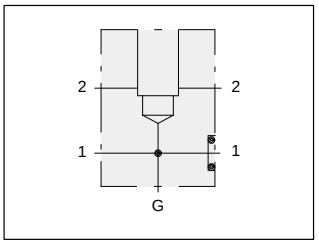

TYPICAL CARTRIDGES USED WITH THIS BODY

RPIC	- ***	Page	1.07
RPIE	- ***	Page	1.09
RDHA	- ***	Page	1.11
RQIB	- ***	Page	1.13
RPID	- ***	Page	1.15

Cartridge seal type determines O–ring type.

Instructions for ordering complete cartridge and body assemblies. Page viii

Pressure ratings, material specifications. Page 11.02

SAE Specifications. Page 11.03

Sandwich mount through port 1.50” SAE Code 62 body with gauge port.

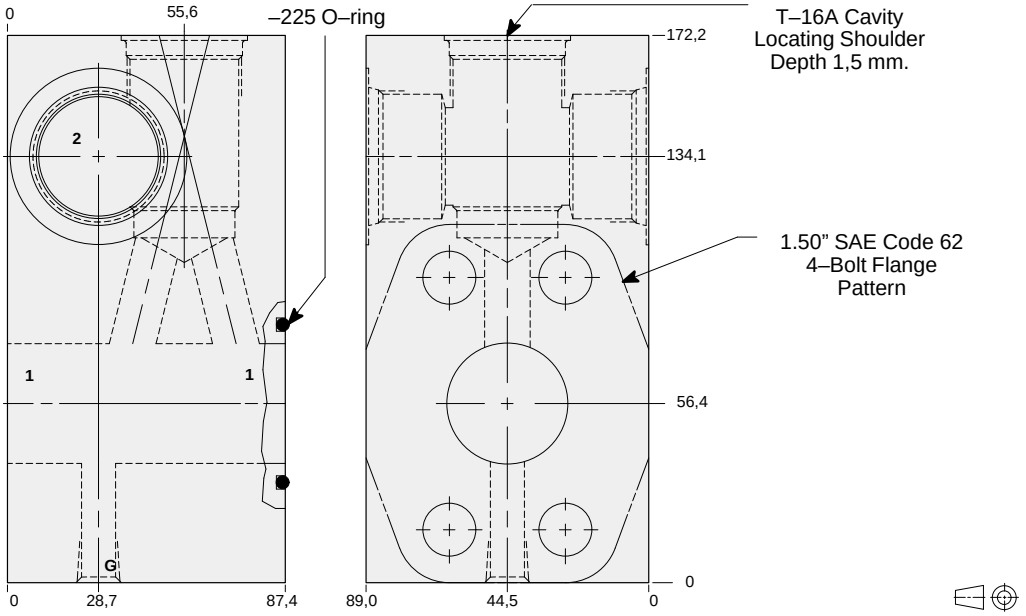

Mounting Hole Dimensions	*Port 2*	*Gauge Port*	ALUMINIUM		SG IRON	
			Model Code	*List Price*	*Model Code*	*List Price*
Inch	1.25 NPTF	.25 NPTF	**ZFT**		**ZFT/S**	
Inch	SAE-20	.25 NPTF	**ZFV**		**ZFV/S**	
Metric	1.25 BSPP	.25 BSPP	**ZFW**		**ZFW/S**	

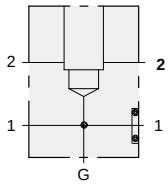

Sandwich mount through flange port 1.50” SAE Code 61 body with gauge port.

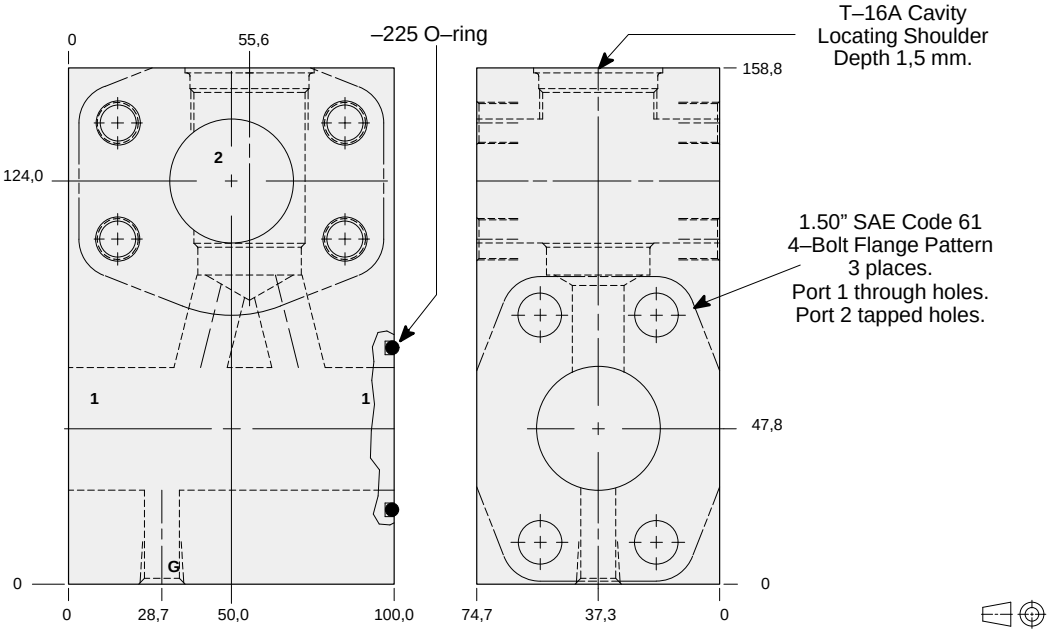

TYPICAL CARTRIDGES USED WITH THIS BODY

RPIC	- ***	Page	1.07
RPIE	- ***	Page	1.09
RDHA	- ***	Page	1.11
RQIB	- ***	Page	1.13
RPID	- ***	Page	1.15

Cartridge seal type determines O–ring type.

Instructions for ordering complete cartridge and body assemblies. Page viii

Pressure ratings, material specifications. Page 11.02

SAE Specifications. Page 11.03

Mounting Hole Dimensions	*Gauge Port*	ALUMINIUM		SG IRON	
		Model Code	*List Price*	*Model Code*	*List Price*
Inch	.25 NPTF	**ZQA**		**ZQA/S**	
Metric	.25 BSPP	**ZQA/M**		**ZQA/T**	

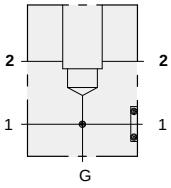

Sandwich mount through flange port 1.50” SAE Code 62 body with gauge port.

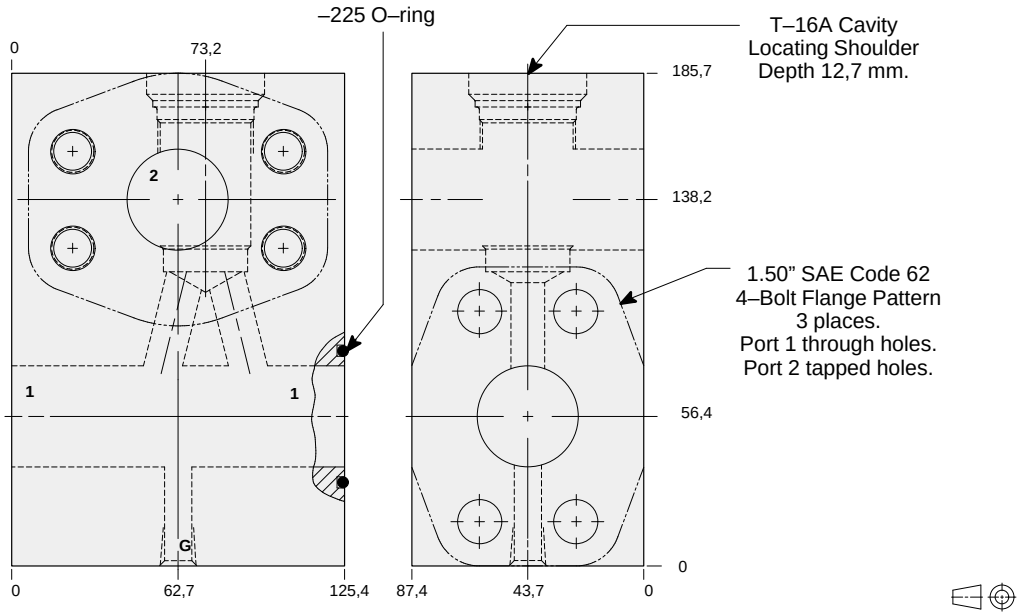

TYPICAL CARTRIDGES USED WITH THIS BODY

RPIC	- ***	Page	1.07
RPIE	- ***	Page	1.09
RDHA	- ***	Page	1.11
RQIB	- ***	Page	1.13
RPID	- ***	Page	1.15

Cartridge seal type determines O–ring type.

Instructions for ordering complete cartridge and body assemblies. Page viii

Pressure ratings, material specifications. Page 11.02

SAE Specifications. Page 11.03

Mounting Hole Dimensions	*Gauge Port*	ALUMINIUM		SG IRON	
		Model Code	*List Price*	*Model Code*	*List Price*
Inch	.25 NPTF	**ZBJ**		**ZBJ/S**	
Metric	.25 BSPP	**ZBJ/M**		**ZBJ/T**	

LINE MOUNT BODIES

- Aluminium rated to 210 bar and SG Iron rated to 350 bar.

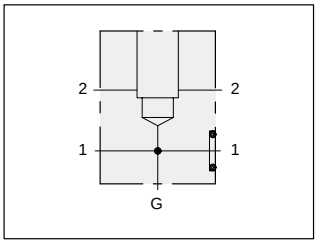

Flange mount through port 1.50” SAE Code 61 body with threaded outlet and gauge port.

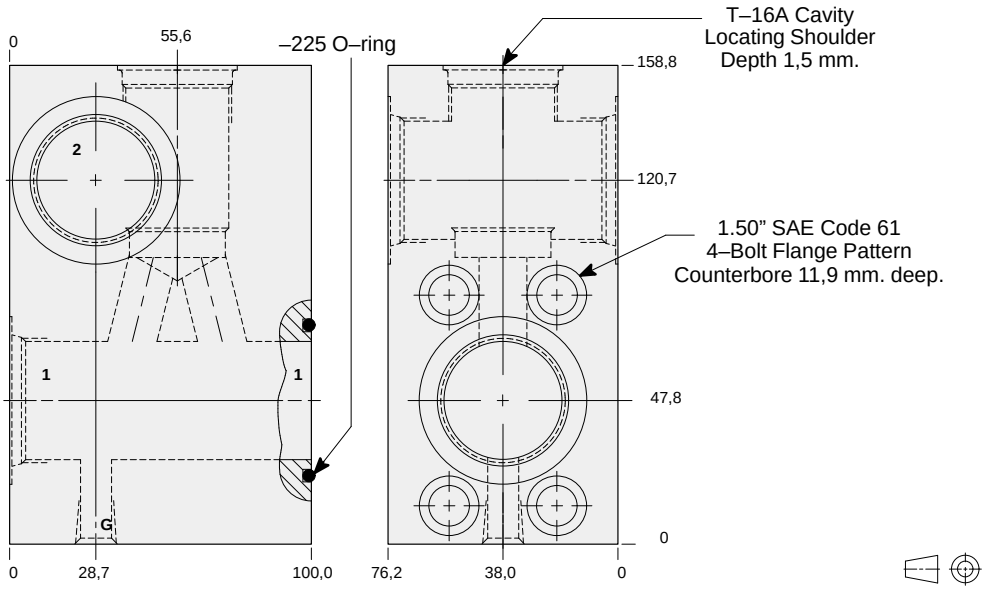

TYPICAL CARTRIDGES USED WITH THIS BODY

RPIC - *** Page 1.07
RPIE - *** Page 1.09
RDHA - *** Page 1.11
RQIB - *** Page 1.13

Cartridge seal type determines O–ring type.

Instructions for ordering complete cartridge and body assemblies. Page viii

Pressure ratings, material specifications. Page 11.02

SAE Specifications. Page 11.03

Mounting Hole Dimensions	*Ports 1 & 2*	*Gauge Port*	ALUMINIUM		SG IRON	
			Model Code	*List Price*	*Model Code*	*List Price*
Inch	1.25 NPTF	.25 NPTF	**ZBQ**		**ZBQ/S**	
Inch	SAE-20	.25 NPTF	**ZBP**		**ZBP/S**	
Metric	1.25 BSPP	.25 BSPP	**ZBN/M**		**ZBN/T**	

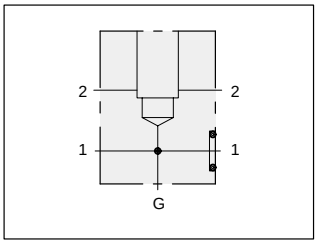

Flange mount through port 1.50” SAE Code 62 body with threaded outlet and gauge port.

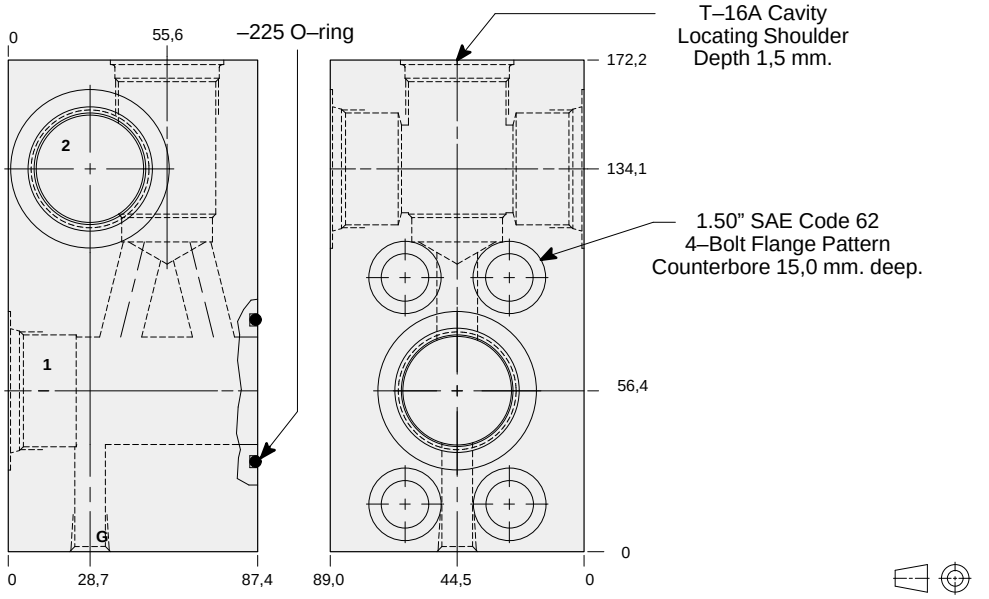

TYPICAL CARTRIDGES USED WITH THIS BODY

RPIC - *** Page 1.07
RPIE - *** Page 1.09
RDHA - *** Page 1.11
RQIB - *** Page 1.13

Cartridge seal type determines O–ring type.

Instructions for ordering complete cartridge and body assemblies. Page viii

Pressure ratings, material specifications. Page 11.02

SAE Specifications. Page 11.03

Mounting Hole Dimensions	*Ports 1 & 2*	*Gauge Port*	ALUMINIUM		SG IRON	
			Model Code	*List Price*	*Model Code*	*List Price*
Inch	1.25 NPTF	.25 NPTF	**ZBM**		**ZBM/S**	
Inch	SAE-20	.25 NPTF	**ZBL**		**ZBL/S**	
Metric	1.25 BSPP	.25 BSPP	**ZBK/M**		**ZBK/T**	

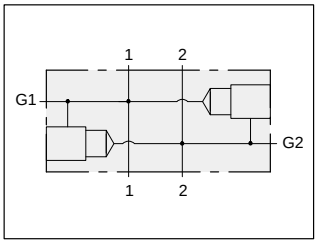

Two cavity body with gauge ports for cross–port relief applications.

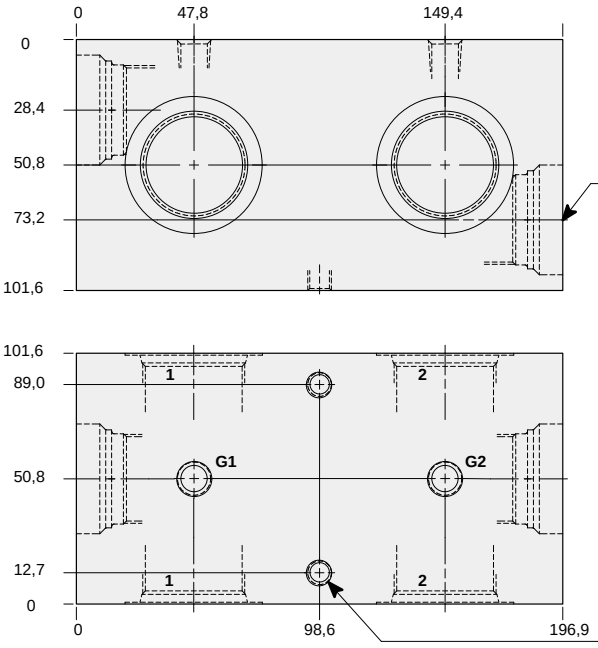

TYPICAL CARTRIDGES USED WITH THIS BODY

RPIC	- ***	Page	1.07
RPIE	- ***	Page	1.09
RDHA	- ***	Page	1.11
RQIB	- ***	Page	1.13

Instructions for ordering complete cartridge and body assemblies. Page viii

Pressure ratings, material specifications. Page 11.02

Mounting Hole Dimensions	*Ports 1 & 2*	*Ports G1 & G2*	ALUMINIUM		SG IRON	
			Model Code	*List Price*	*Model Code*	*List Price*
Inch	1.25 NPTF	.25 NPTF	**YIF**		**YIF/S**	
Inch	SAE-20	.25 NPTF	**YIN**		**YIN/S**	
Metric	1.25 BSPP	.25 BSPP	**YIY/M**		**YIY/T**	

LINE MOUNT BODIES

- Aluminium rated to 210 bar and SG Iron rated to 350 bar.

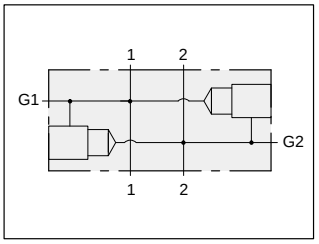

TYPICAL CARTRIDGES USED WITH THIS BODY

RPIC - *** Page 1.07
RPIE - *** Page 1.09
RDHA - *** Page 1.11
RQIB - *** Page 1.13

Instructions for ordering complete cartridge and body assemblies. Page viii

Pressure ratings, material specifications. Page 11.02

SAE Specifications. Page 11.03

Two cavity 1.50” SAE Code 61 flange port body with gauge ports for cross–port relief applications.

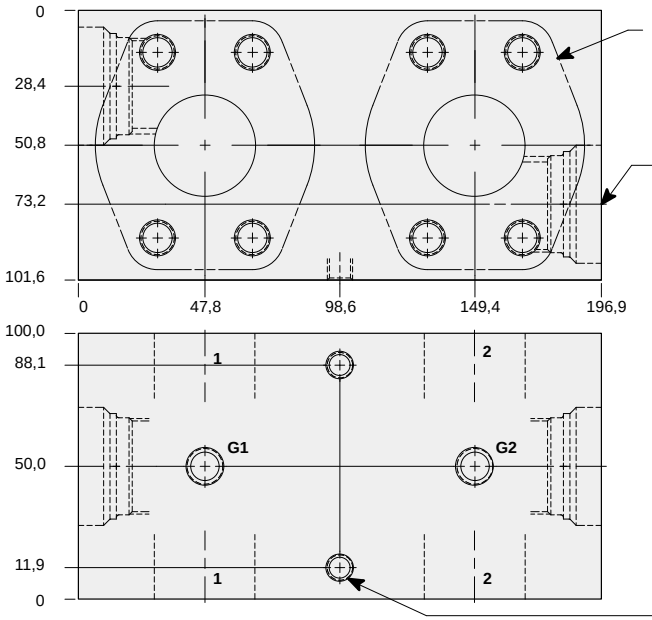

1.50” SAE Code 61
4–Bolt Flange Pattern
4 places.

T–16A Cavity
Locating Shoulder
Depth 14,2 mm
2 places.

Mounting Holes:
(opposite side)
Inch: .375-16 UNC-2B
x 15,7 mm. deep.
Metric: M10 x 1.50-6H
x 15,7 mm. deep.
2 places.

Mounting Hole Dimensions	*Gauge Port*	ALUMINIUM		SG IRON	
		Model Code	*List Price*	*Model Code*	*List Price*
Inch	.25 NPTF	**YIR**		**YIR/S**	
Metric	.25 BSPP	**YIR/M**		**YIR/T**	

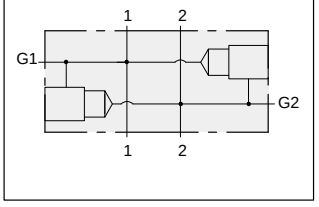

TYPICAL CARTRIDGES USED WITH THIS BODY

RPIC - *** Page 1.07
RPIE - *** Page 1.09
RDHA - *** Page 1.11
RQIB - *** Page 1.13

Instructions for ordering complete cartridge and body assemblies. Page viii

Pressure ratings, material specifications. Page 11.02

SAE Specifications. Page 11.03

Two cavity 1.50” SAE Code 62 flange port body with gauge ports or cross–port relief applications.

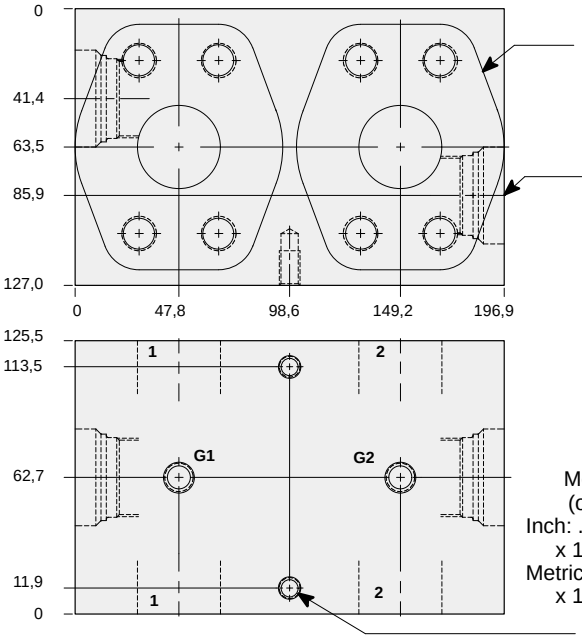

1.50” SAE Code 62
4–Bolt Flange Pattern
4 places.

T–16A Cavity
Locating Shoulder
Depth 14,2 mm
2 places.

Mounting Holes:
(opposite side)
Inch: .375-16 UNC-2B
x 19,0 mm. deep.
Metric: M10 x 1.50-6H
x 19,0 mm. deep.
2 places.

Mounting Hole Dimensions	*Gauge Port*	ALUMINIUM		SG IRON	
		Model Code	*List Price*	*Model Code*	*List Price*
Inch	.25 NPTF	**YI6**		**YI6/S**	
Metric	.25 BSPP	**YI6/M**		**YI6/T**	

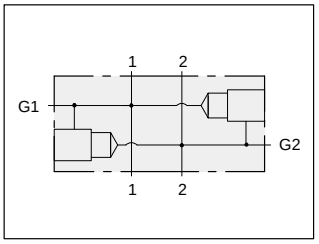

TYPICAL CARTRIDGES USED WITH THIS BODY

RPIC	- ***	Page	1.07
RPIE	- ***	Page	1.09
RDHA	- ***	Page	1.11
RQIB	- ***	Page	1.13

Instructions for ordering complete cartridge and body assemblies. Page viii

Pressure ratings, material specifications. Page 11.02

SAE Specifications. Page 11.03

Two cavity 2.00” SAE Code 61 flange port body with gauge ports for cross–port relief applications.

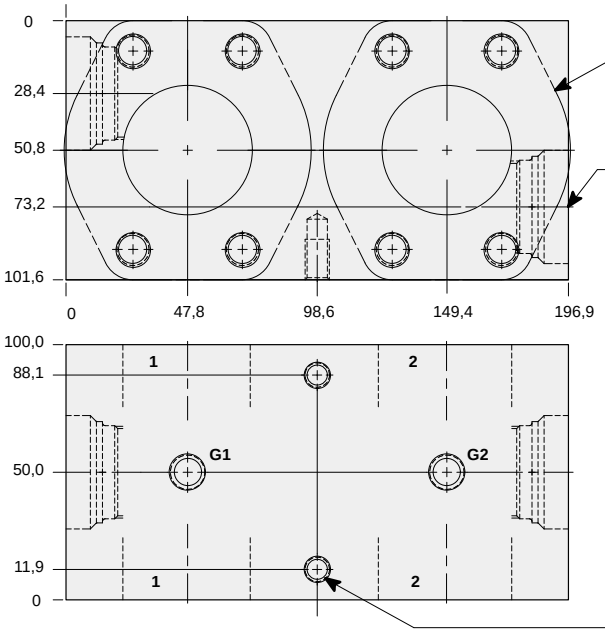

2.00” SAE Code 61
4–Bolt Flange Pattern
4 places.

T–16A Cavity
Locating Shoulder
Depth 14,2 mm
2 places.

Mounting Holes:
(opposite side)
Inch: .375-16 UNC-2B
x 15,7 mm. deep.
Metric: M10 x 1.50-6H
x 15,7 mm. deep.
2 places.

Mounting Hole Dimensions	*Gauge Port*	ALUMINIUM		SG IRON	
		Model Code	*List Price*	*Model Code*	*List Price*
Inch	.25 NPTF	**YIS**		**YIS/S**	
Metric	.25 BSPP	**YIS/M**		**YIS/T**	

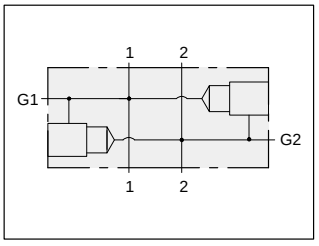

TYPICAL CARTRIDGES USED WITH THIS BODY

RPIC	- ***	Page	1.07
RPIE	- ***	Page	1.09
RDHA	- ***	Page	1.11
RQIB	- ***	Page	1.13

Instructions for ordering complete cartridge and body assemblies. Page viii

Pressure ratings, material specifications. Page 11.02

SAE Specifications. Page 11.03

Two cavity 2.00” SAE Code 62 flange port body with gauge ports for cross–port relief applications.

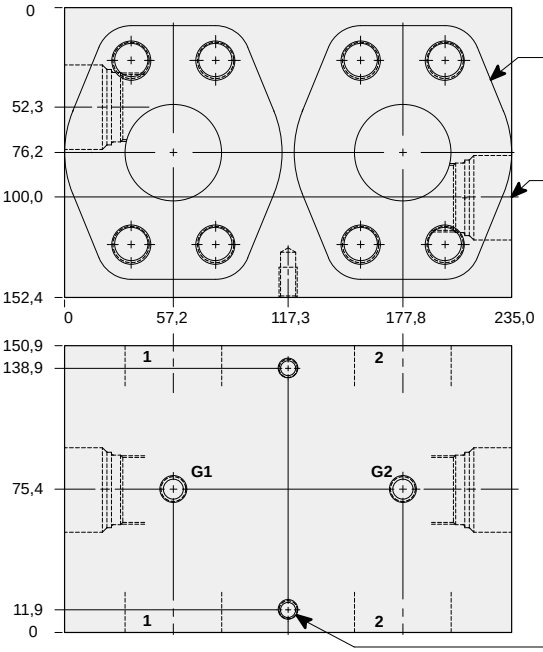

2.00” SAE Code 62
4–Bolt Flange Pattern
4 places.

T–16A Cavity
Locating Shoulder
Depth 24,6 mm.
2 places.

Mounting Holes:
(opposite side)
Inch: .375-16 UNC-2B
x 19,0 mm. deep.
Metric: M10 x 1.50-6H
x 19,0 mm. deep.
2 places.

Mounting Hole Dimensions	*Gauge Port*	ALUMINIUM		SG IRON	
		Model Code	*List Price*	*Model Code*	*List Price*
Inch	.25 NPTF	**YI8**		**YI8/S**	
Metric	.25 BSPP	**YI8/M**		**YI8/T**	

LINE MOUNT BODIES

- Aluminium rated to 210 bar and SG Iron rated to 350 bar.

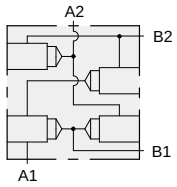

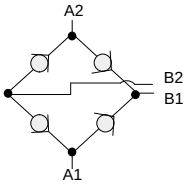

TYPICAL CARTRIDGES USED WITH THIS BODY

CXHA - *** Page 5.09

Instructions for ordering complete cartridge and body assemblies. Page viii

Pressure ratings, material specifications. Page 11.02

Rectifier body.

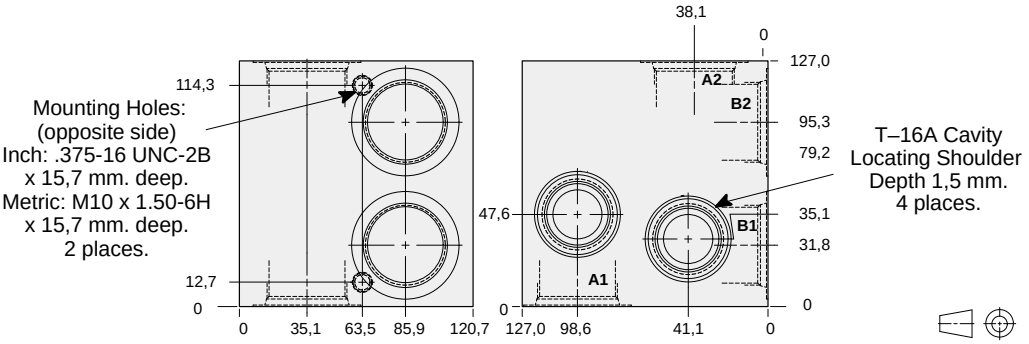

Mounting Hole Dimensions	All Ports	ALUMINIUM		SG IRON	
		Model Code	List Price	Model Code	List Price
Inch	.75 NPTF	YSC		YSC/S	
Inch	1.00 NPTF	YSD		YSD/S	
Inch	1.25 NPTF	YSE		YSE/S	
Inch	SAE-12	YSF		YSF/S	
Inch	SAE-16	YSG		YSG/S	
Inch	SAE-20	YSH		YSH/S	
Metric	.75 BSPP	YSI		YSI/S	
Metric	1.00 BSPP	YSJ		YSJ/S	
Metric	1.25 BSPP	YSK		YSK/S	

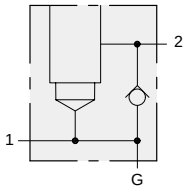

TYPICAL CARTRIDGES USED WITH THIS BODY

RPIC - *** Page 1.07
RPIE - *** Page 1.09
RDHA - *** Page 1.11
RQIB - *** Page 1.13
RPID - *** Page 1.15
NFEC - *** Page 5.13
FXEA - *** Page 5.21

Cartridge seal type determines check valve seal type.

Instructions for ordering complete cartridge and body assemblies. Page viii

Pressure ratings, material specifications. Page 11.02

Body with reverse free flow check and gauge port.

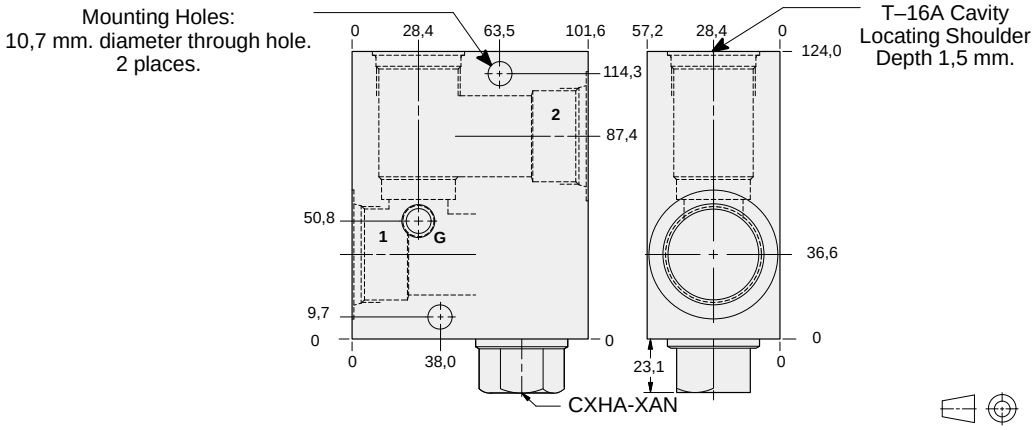

All Ports	Gauge Port	ALUMINIUM		SG IRON	
		Model Code	List Price	Model Code	List Price
.75 NPTF	.25 NPTF	IND		IND/S	
1.00 NPTF	.25 NPTF	INE		INE/S	
1.25 NPTF	.25 NPTF	INF		INF/S	
SAE-12	.25 NPTF	INL		INL/S	
SAE-16	.25 NPTF	INM		INM/S	
SAE-20	.25 NPTF	INN		INN/S	
.75 BSPP	.25 BSPP	INW		INW/S	
1.00 BSPP	.25 BSPP	INX		INX/S	
1.25 BSPP	.25 BSPP	INY		INY/S	

LINE MOUNT BODIES

- Aluminium rated to 210 bar and SG Iron rated to 350 bar.

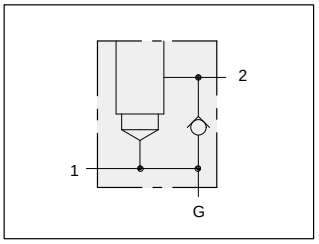

TYPICAL CARTRIDGES USED WITH THIS BODY

RPIC	- ***	Page	1.07
RPIE	- ***	Page	1.09
RDHA	- ***	Page	1.11
RQIB	- ***	Page	1.13
RPID	- ***	Page	1.15
NFEC	- ***	Page	5.13
FXEA	- ***	Page	5.21

Cartridge seal type determines check valve seal type.

Instructions for ordering complete cartridge and body assemblies. Page viii

Pressure ratings, material specifications. Page 11.02

SAE Specifications. Page 11.03

1.00” SAE Code 61 flange port body with reverse free flow check and gauge port.

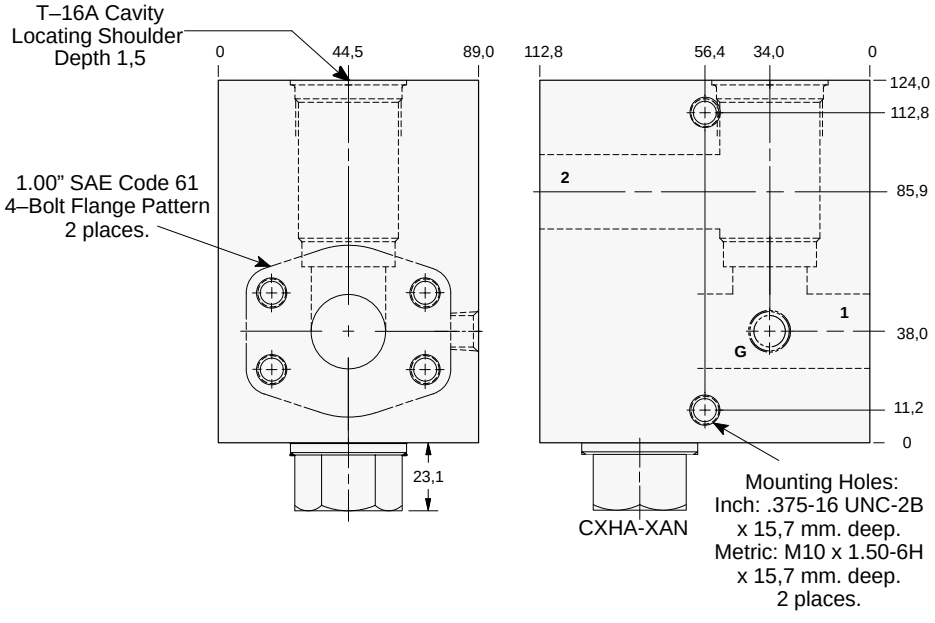

Mounting Hole Dimensions	*Gauge Port*	ALUMINIUM		SG IRON	
		Model Code	*List Price*	*Model Code*	*List Price*
Inch	.25 NPTF	**INP**		**INP/S**	
Metric	.25 BSPP	**INP/M**		**INP/T**	

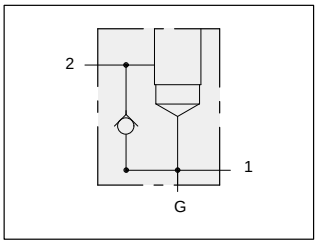

TYPICAL CARTRIDGES USED WITH THIS BODY

RPIC	- ***	Page	1.07
RPIE	- ***	Page	1.09
RDHA	- ***	Page	1.11
RQIB	- ***	Page	1.13
RPID	- ***	Page	1.15
NFEC	- ***	Page	5.13
FXEA	- ***	Page	5.21

Cartridge seal type determines check valve seal type.

Instructions for ordering complete cartridge and body assemblies. Page viii

Pressure ratings, material specifications. Page 11.02

SAE Specifications. Page 11.03

1.00” SAE Code 62 flange port body with reverse free flow check and gauge port.

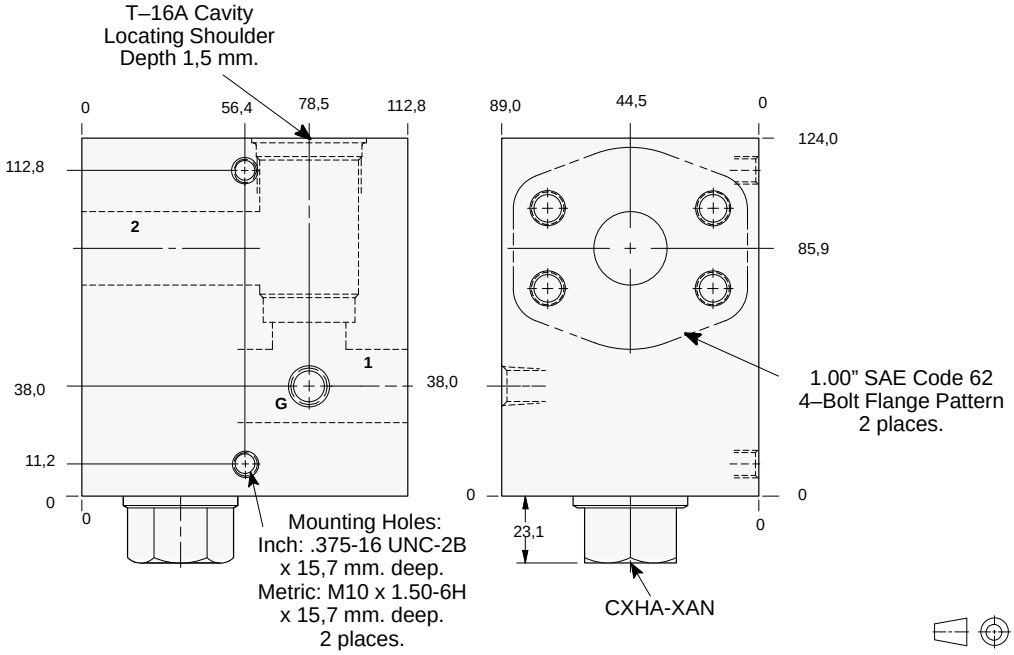

Mounting Hole Dimensions	*Gauge Port*	ALUMINIUM		SG IRON	
		Model Code	*List Price*	*Model Code*	*List Price*
Inch	.25 NPTF	**IN4**		**IN4/S**	
Metric	.25 BSPP	**IN4/M**		**IN4/T**	

LINE MOUNT BODIES

- Aluminium rated to 210 bar and SG Iron rated to 350 bar.

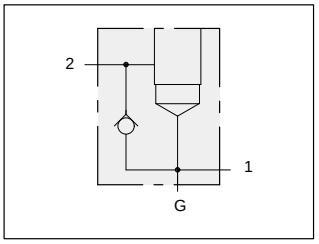

1.25” SAE Code 61 flange port body with reverse free flow check and gauge port.

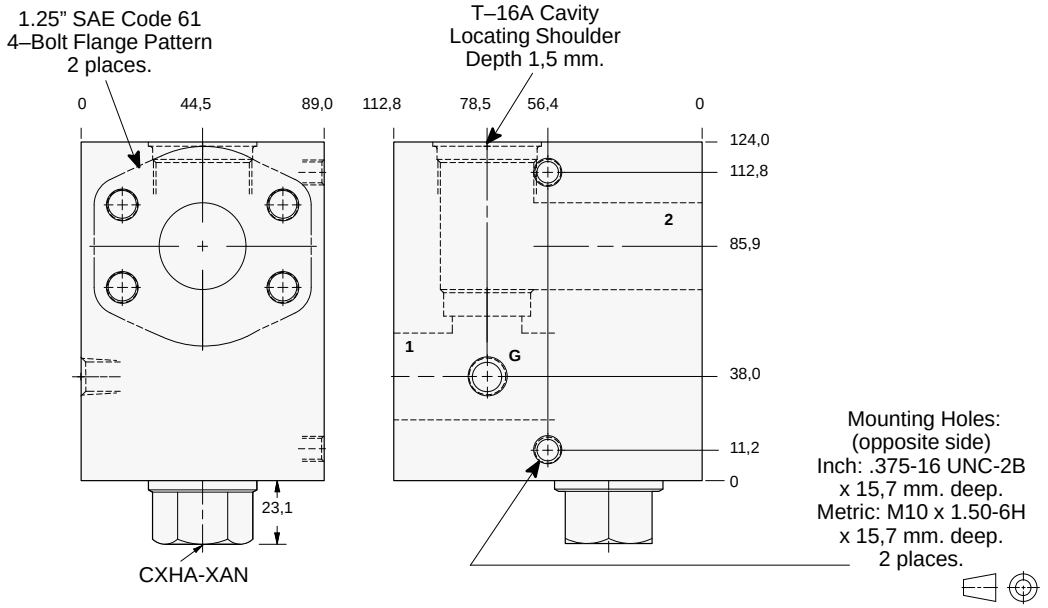

Mounting Hole Dimensions	*Gauge Port*	ALUMINIUM		SG IRON	
		Model Code	*List Price*	*Model Code*	*List Price*
Inch	.25 NPTF	**INQ**		**INQ/S**	
Metric	.25 BSPP	**INQ/M**		**INQ/T**	

TYPICAL CARTRIDGES USED WITH THIS BODY

RPIC	- ***	Page	1.07
RPIE	- ***	Page	1.09
RDHA	- ***	Page	1.11
RQIB	- ***	Page	1.13
RPID	- ***	Page	1.15
NFEC	- ***	Page	5.13
FXEA	- ***	Page	5.21

Cartridge seal type determines check valve seal type.

Instructions for ordering complete cartridge and body assemblies. Page viii

Pressure ratings, material specifications. Page 11.02

SAE Specifications. Page 11.03

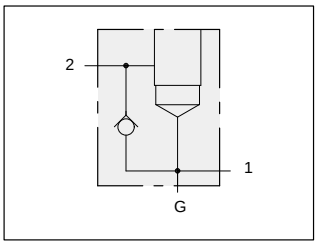

1.25” SAE Code 62 flange port body with reverse free flow check and gauge port.

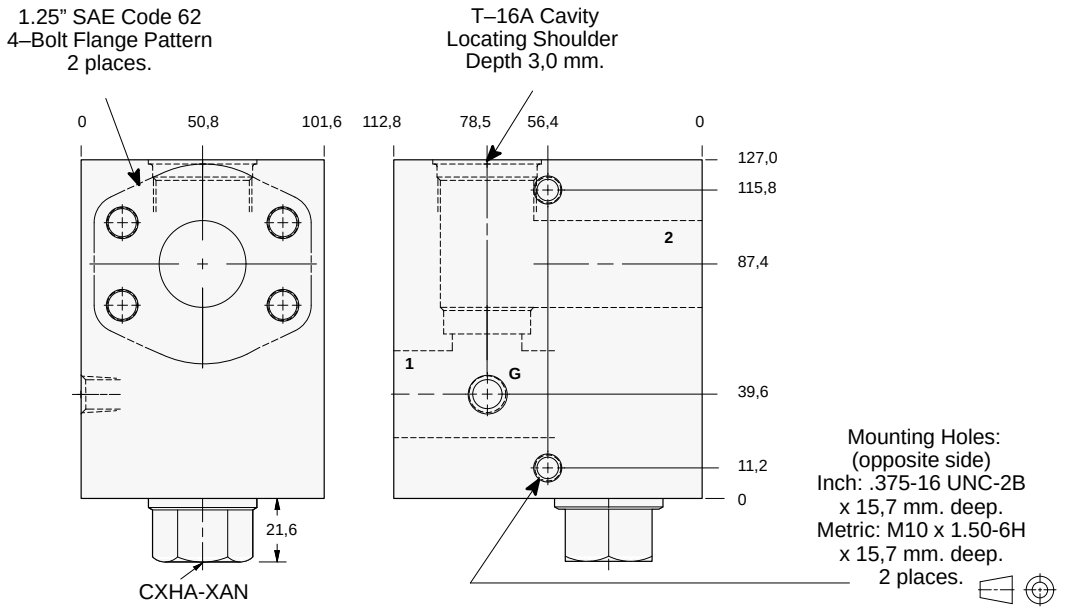

Mounting Hole Dimensions	*Gauge Port*	ALUMINIUM		SG IRON	
		Model Code	*List Price*	*Model Code*	*List Price*
Inch	.25 NPTF	**IN5**		**IN5/S**	
Metric	.25 BSPP	**IN5/M**		**IN5/T**	

TYPICAL CARTRIDGES USED WITH THIS BODY

RPIC	- ***	Page	1.07
RPIE	- ***	Page	1.09
RDHA	- ***	Page	1.11
RQIB	- ***	Page	1.13
RPID	- ***	Page	1.15
NFEC	- ***	Page	5.13
FXEA	- ***	Page	5.21

Cartridge seal type determines check valve seal type.

Instructions for ordering complete cartridge and body assemblies. Page viii

Pressure ratings, material specifications. Page 11.02

SAE Specifications. Page 11.03

LINE MOUNT BODIES

- Aluminium rated to 210 bar and SG Iron rated to 350 bar.

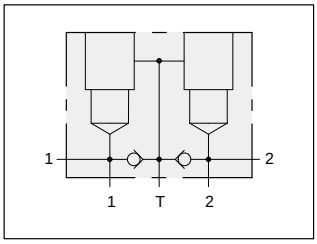

Two cavity body with make–up checks for cross–port relief applications.

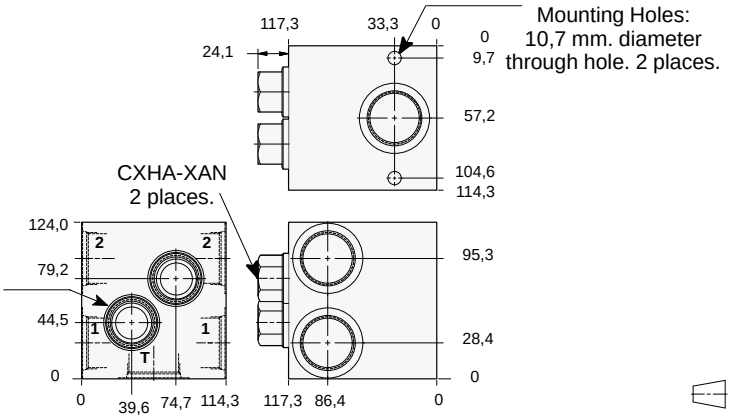

TYPICAL CARTRIDGES USED WITH THIS BODY

RPIC	- ***	Page	1.07
RPIE	- ***	Page	1.09
RDHA	- ***	Page	1.11
RQIB	- ***	Page	1.13
RPID	- ***	Page	1.15

Cartridge seal type determines check valve seal type.

Instructions for ordering complete cartridge and body assemblies. Page viii

Pressure ratings, material specifications. Page 11.02

All Ports	ALUMINIUM		SG IRON	
	Model Code	*List Price*	*Model Code*	*List Price*
.75 NPTF	**IMD**		**IMD/S**	
1.00 NPTF	**IME**		**IME/S**	
1.25 NPTF	**IMF**		**IMF/S**	
SAE-12	**IML**		**IML/S**	
SAE-16	**IMM**		**IMM/S**	
SAE-20	**IMN**		**IMN/S**	
.75 BSPP	**IMW**		**IMW/S**	
1.00 BSPP	**IMX**		**IMX/S**	
1.25 BSPP	**IMY**		**IMY/S**	

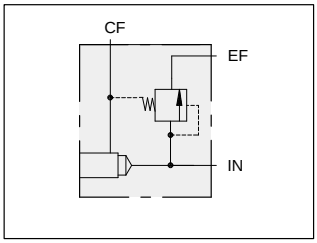

Body with moldulating element for pressure compensated flow control applications.

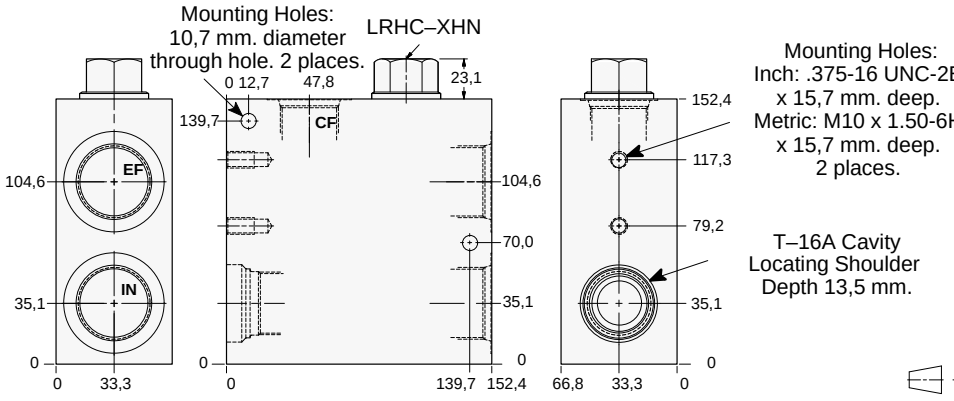

TYPICAL CARTRIDGES USED WITH THIS BODY

NFEC	- ***	Page	5.13
NCFB	- ***	Page	5.17
NCFC	- ***	Page	5.19
FXEA	- ***	Page	5.21
FCEB	- ***	Page	5.23
FDEA	- ***	Page	5.25

Cartridge seal type determines check valve seal type.

Instructions for ordering complete cartridge and body assemblies. Page viii

Pressure ratings, material specifications. Page 11.02

Mounting Hole Dimensions	*Port CF*	*Ports IN, & EF*	ALUMINIUM		SG IRON	
			Model Code	*List Price*	*Model Code*	*List Price*
Inch	.50 NPTF	.75 NPTF	**WNI**		**WNI/S**	
Inch	.75 NPTF	1.00 NPTF	**WNJ**		**WNJ/S**	
Inch	1.00 NPTF	1.25 NPTF	**WNK**		**WNK/S**	
Inch	SAE-10	SAE-12	**WNL**		**WNL/S**	
Inch	SAE-12	SAE-16	**WNM**		**WNM/S**	
Inch	SAE-16	SAE-20	**WNN**		**WNN/S**	
Metric	.50 BSPP	.75 BSPP	**WNO**		**WNO/S**	
Metric	.75 BSPP	1.00 BSPP	**WNP**		**WNP/S**	
Metric	1.00 BSPP	1.25 BSPP	**WNQ**		**WNQ/S**	

LINE MOUNT BODIES

- Aluminium rated to 210 bar and SG Iron rated to 350 bar.

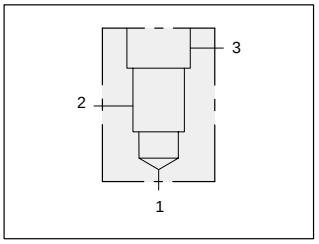

90 degree body.

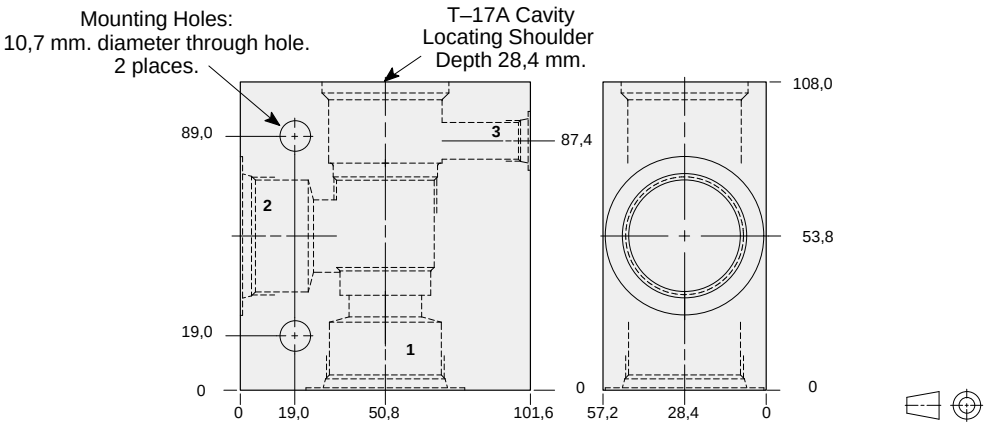

TYPICAL CARTRIDGES USED WITH THIS BODY

RVGA - *** Page 1.19
RSHC - *** Page 2.07
SQHB - *** Page 2.09
RSHE - *** Page 2.11
SCGA - *** Page 2.13
PBHB - *** Page 3.07
PBHC - *** Page 3.09
CBGA - *** Page 4.11
CBGG - *** Page 4.13
CBGH - *** Page 4.15
CKGB - *** Page 4.17
LOHC - *** Page 9.09
LKHC - *** Page 9.11
LPHC - *** Page 9.13
LRHC - *** Page 9.15
COHA - *** Page 10.13

Instructions for ordering complete cartridge and body assemblies. Page viii

Pressure ratings, material specifications. Page 11.02

Ports 1 & 2	*Port 3*	ALUMINIUM		SG IRON	
		Model Code	*List Price*	*Model Code*	*List Price*
.75 NPTF	.25 NPTF	**HCD**		**HCD/S**	
1.00 NPTF	.25 NPTF	**HCE**		**HCE/S**	
1.25 NPTF	.25 NPTF	**HCF**		**HCF/S**	
SAE-12	SAE-6	**HCL**		**HCL/S**	
SAE-16	SAE-6	**HCM**		**HCM/S**	
SAE-20	SAE-6	**HCN**		**HCN/S**	
.75 BSPP	.25 BSPP	**HCW**		**HCW/S**	
1.00 BSPP	.25 BSPP	**HCX**		**HCX/S**	
1.25 BSPP	.25 BSPP	**HCY**		**HCY/S**	

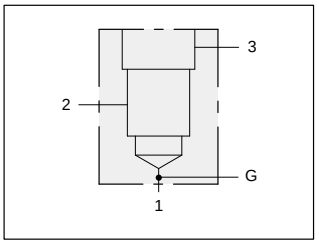

90 degree body with gauge port.

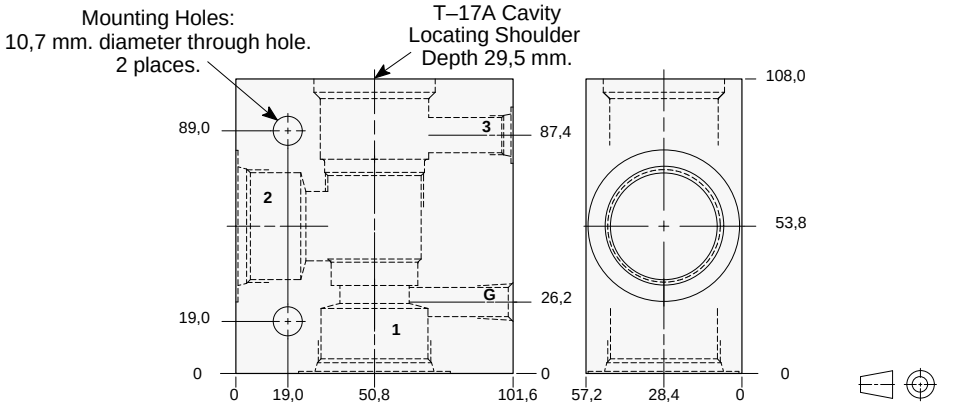

TYPICAL CARTRIDGES USED WITH THIS BODY

RVGA - *** Page 1.19
RSHC - *** Page 2.07
SQHB - *** Page 2.09
RSHE - *** Page 2.11
SCGA - *** Page 2.13
PBHB - *** Page 3.07
PBHC - *** Page 3.09
CBGA - *** Page 4.11
CBGG - *** Page 4.13
CBGH - *** Page 4.15
CKGB - *** Page 4.17
LOHC - *** Page 9.09
LKHC - *** Page 9.11
LPHC - *** Page 9.13
LRHC - *** Page 9.15
COHA - *** Page 10.13

Instructions for ordering complete cartridge and body assemblies. Page viii

Pressure ratings, material specifications. Page 11.02

Ports 1 & 2	*Port 3*	*Gauge Port*	ALUMINIUM		SG IRON	
			Model Code	*List Price*	*Model Code*	*List Price*
.75 NPTF	.25 NPTF	.25 NPTF	**HFD**		**HFD/S**	
1.00 NPTF	.25 NPTF	.25 NPTF	**HFE**		**HFE/S**	
1.25 NPTF	.25 NPTF	.25 NPTF	**HFF**		**HFF/S**	
SAE-12	SAE-6	.25 NPTF	**HFL**		**HFL/S**	
SAE-16	SAE-6	.25 NPTF	**HFM**		**HFM/S**	
SAE-20	SAE-6	.25 NPTF	**HFN**		**HFN/S**	
.75 BSPP	.25 BSPP	.25 BSPP	**HFW**		**HFW/S**	
1.00 BSPP	.25 BSPP	.25 BSPP	**HFX**		**HFX/S**	
1.25 BSPP	.25 BSPP	.25 BSPP	**HFY**		**HFY/S**	

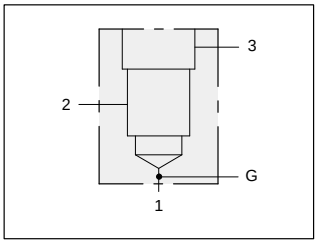

90 degree body with high capacity port 3 and gauge port.

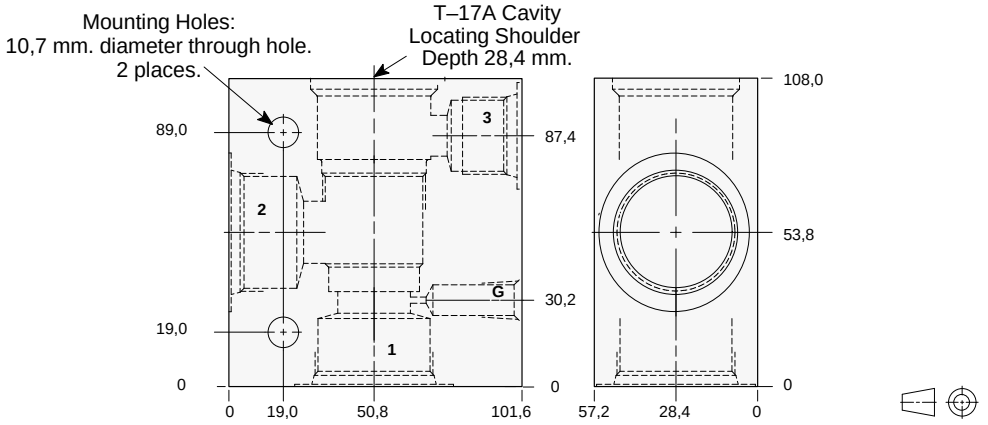

TYPICAL CARTRIDGES USED WITH THIS BODY

PPHB - *** Page 3.11
PPHC - *** Page 3.13
FREA - *** Page 6.03

Instructions for ordering complete cartridge and body assemblies. Page viii

Pressure ratings, material specifications. Page 11.02

Ports 1 & 2	*Port 3*	*Gauge Port*	ALUMINIUM		SG IRON	
			Model Code	*List Price*	*Model Code*	*List Price*
.75 NPTF	.75 NPTF	.25 NPTF	**HED**		**HED/S**	
1.00 NPTF	.75 NPTF	.25 NPTF	**HEE**		**HEE/S**	
1.25 NPTF	.75 NPTF	.25 NPTF	**HEF**		**HEF/S**	
SAE-12	SAE-6	.25 NPTF	**HEL**		**HEL/S**	
SAE-16	SAE-6	.25 NPTF	**HEM**		**HEM/S**	
SAE-20	SAE-6	.25 NPTF	**HEN**		**HEN/S**	
.75 BSPP	.75 BSPP	.25 BSPP	**HEW**		**HEW/S**	
1.00 BSPP	.75 BSPP	.25 BSPP	**HEX**		**HEX/S**	
1.25 BSPP	.75 BSPP	.25 BSPP	**HEY**		**HEY/S**	

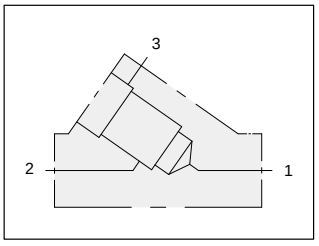

Inline body.

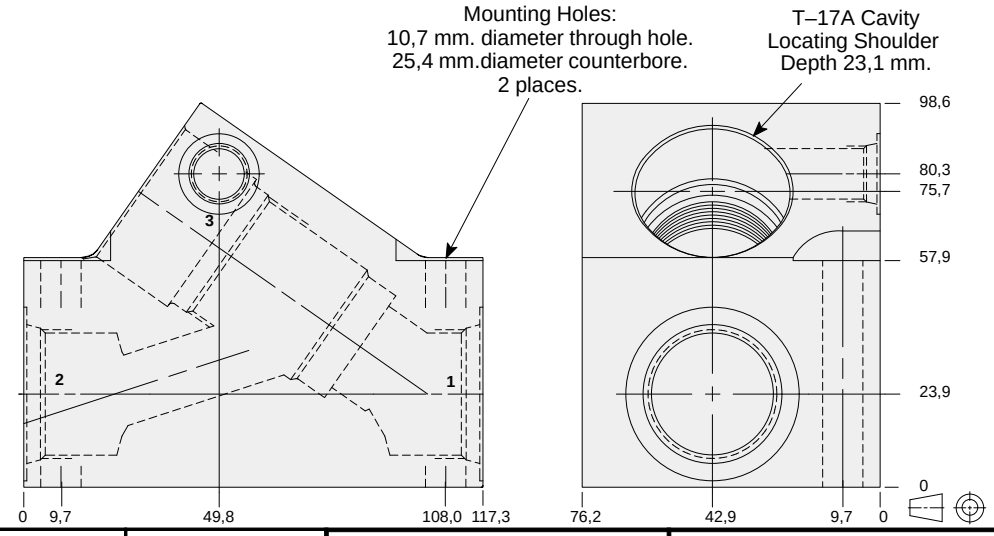

TYPICAL CARTRIDGES USED WITH THIS BODY

RVGA - *** Page 1.19
RSHC - *** Page 2.07
SQHB - *** Page 2.09
RSHE - *** Page 2.11
SCGA - *** Page 2.13
PBHB - *** Page 3.07
PBHC - *** Page 3.09
CBGA - *** Page 4.11
CBGG - *** Page 4.13
CBGH - *** Page 4.15
CKGB - *** Page 4.17
LOHC - *** Page 9.09
LKHC - *** Page 9.11
LPHC - *** Page 9.13
LRHC - *** Page 9.15
COHA - *** Page 10.13

Instructions for ordering complete cartridge and body assemblies. Page viii

Pressure ratings, material specifications. Page 11.02

Ports 1 & 2	*Port 3*	ALUMINIUM		SG IRON	
		Model Code	*List Price*	*Model Code*	*List Price*
.75 NPTF	.25 NPTF	**HDD**		**HDD/S**	
1.00 NPTF	.25 NPTF	**HDE**		**HDE/S**	
SAE-12	SAE-6	**HDL**		**HDL/S**	
SAE-16	SAE-6	**HDM**		**HDM/S**	
.75 BSPP	.25 BSPP	**HDW**		**HDW/S**	
1.00 BSPP	.25 BSPP	**HDX**		**HDX/S**	

LINE MOUNT BODIES

- Aluminium rated to 210 bar and SG Iron rated to 350 bar.

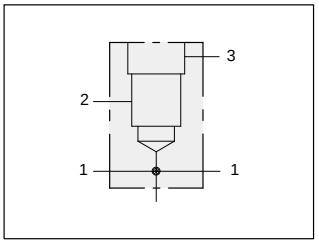

Through port body with gauge port.

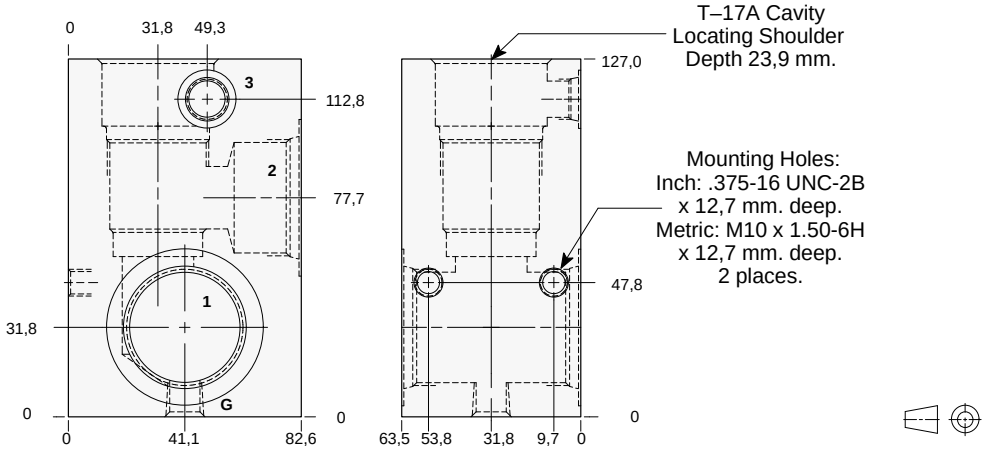

TYPICAL CARTRIDGES USED WITH THIS BODY

RVGA - *** Page 1.19
RSHC - *** Page 2.07
SQHB - *** Page 2.09
RSHE - *** Page 2.11
SCGA - *** Page 2.13
PBHB - *** Page 3.07
PBHC - *** Page 3.09

Instructions for ordering complete cartridge and body assemblies. Page viii

Pressure ratings, material specifications. Page 11.02

Mounting Hole Dimensions	*Ports 1 & 2*	*Port 3*	*Gauge Port*	ALUMINIUM		SG IRON	
				Model Code	*List Price*	*Model Code*	*List Price*
Inch	.75 NPTF	.25 NPTF	.25 NPTF	**HHD**		**HHD/S**	
Inch	1.00 NPTF	.25 NPTF	.25 NPTF	**HHE**		**HHE/S**	
Inch	1.25 NPTF	.25 NPTF	.25 NPTF	**HHF**		**HHF/S**	
Inch	SAE-12	SAE-6	.25 NPTF	**HHL**		**HHL/S**	
Inch	SAE-16	SAE-6	.25 NPTF	**HHM**		**HHM/S**	
Inch	SAE-20	SAE-6	.25 NPTF	**HHN**		**HHN/S**	
Metric	.75 BSPP	.25 BSPP	.25 BSPP	**HHW**		**HHW/S**	
Metric	1.00 BSPP	.25 BSPP	.25 BSPP	**HHX**		**HHX/S**	
Metric	1.25 BSPP	.25 BSPP	.25 BSPP	**HHY**		**HHY/S**	

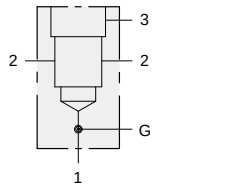

TYPICAL CARTRIDGES USED WITH THIS BODY

PBHB - *** Page 3.07
PBHC - *** Page 3.09

Instructions for ordering complete cartridge and body assemblies. Page viii

Pressure ratings, material specifications. Page 11.02

Through port body with gauge port for reducing applications.

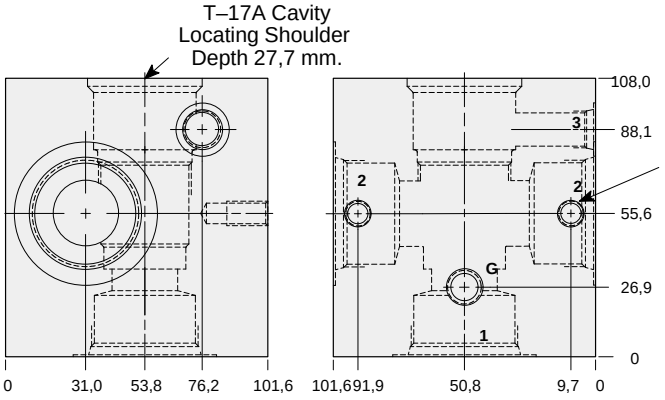

Mounting Holes:
(opposite side)
(Inch: .375-16 UNC-2B
x 15,7 mm. deep.
Metric: M10 x 1.50-6H
x 15,7 mm. deep.
2 places.

Mounting Hole Dimensions	*Ports 1 & 2*	*Port 3*	*Gauge Port*	ALUMINIUM		SG IRON	
				Model Code	*List Price*	*Model Code*	*List Price*
Inch	.75 NPTF	.25 NPTF	.25 NPTF	**WSW**		**WSW/S**	
Inch	1.00 NPTF	.25 NPTF	.25 NPTF	**WSX**		**WSX/S**	
Inch	1.25 NPTF	.25 NPTF	.25 NPTF	**WSY**		**WSY/S**	
Inch	SAE-12	SAE-6	.25 NPTF	**WSZ**		**WSZ/S**	
Inch	SAE-16	SAE-6	.25 NPTF	**WTA**		**WTA/S**	
Inch	SAE-20	SAE-6	.25 NPTF	**WTB**		**WTB/S**	
Metric	.75 BSPP	.25 BSPP	.25 BSPP	**WTC**		**WTC/S**	
Metric	1.00 BSPP	.25 BSPP	.25 BSPP	**WTD**		**WTD/S**	
Metric	1.25 BSPP	.25 BSPP	.25 BSPP	**WTE**		**WTE/S**	

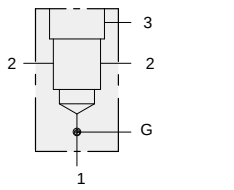

TYPICAL CARTRIDGES USED WITH THIS BODY

PPHB - *** Page 3.11
PPHC - *** Page 3.13
FREA - *** Page 6.03

Instructions for ordering complete cartridge and body assemblies. Page viii

Pressure ratings, material specifications. Page 11.02

Through port body with high capacity port 3 and gauge port for reducing/relieving applications.

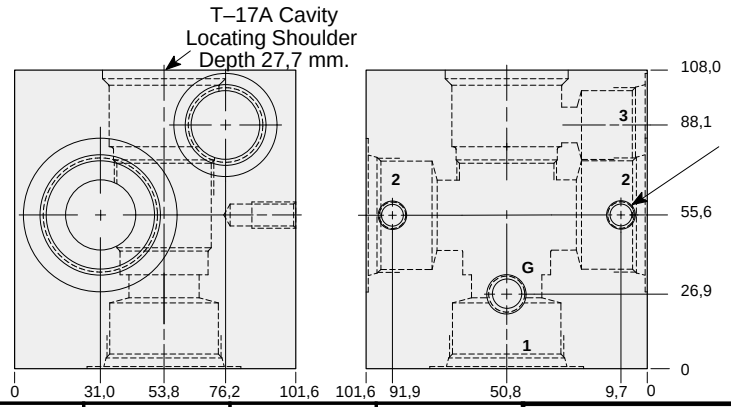

Mounting Holes:
(opposite side)
Inch: .375-16 UNC-2B
x 15,7 mm. deep.
Metric: M10 x 1.50-6H
x 15,7 mm. deep.
2 places.

Mounting Hole Dimensions	*Ports 1 & 2*	*Port 3*	*Gauge Port*	ALUMINIUM		SG IRON	
				Model Code	*List Price*	*Model Code*	*List Price*
Inch	.75 NPTF	.75 NPTF	.25 NPTF	**WTF**		**WTF/S**	
Inch	1.00 NPTF	.75 NPTF	.25 NPTF	**WTG**		**WTG/S**	
Inch	1.25 NPTF	.75 NPTF	.25 NPTF	**WTH**		**WTH/S**	
Inch	SAE-12	SAE-12	.25 NPTF	**WTI**		**WTI/S**	
Inch	SAE-16	SAE-12	.25 NPTF	**WTJ**		**WTJ/S**	
Inch	SAE-20	SAE-12	.25 NPTF	**WTK**		**WTK/S**	
Metric	.75 BSPP	.75 BSPP	.25 BSPP	**WTL**		**WTL/S**	
Metric	1.00 BSPP	.75 BSPP	.25 BSPP	**WTM**		**WTM/S**	
Metric	1.25 BSPP	.75 BSPP	.25 BSPP	**WTN**		**WTN/S**	

LINE MOUNT BODIES

- Aluminium rated to 210 bar and SG Iron rated to 350 bar.

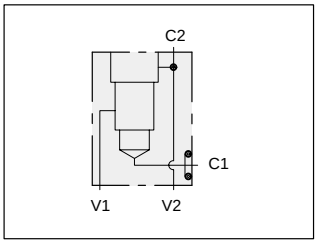

Gasket mount body for load control applications.

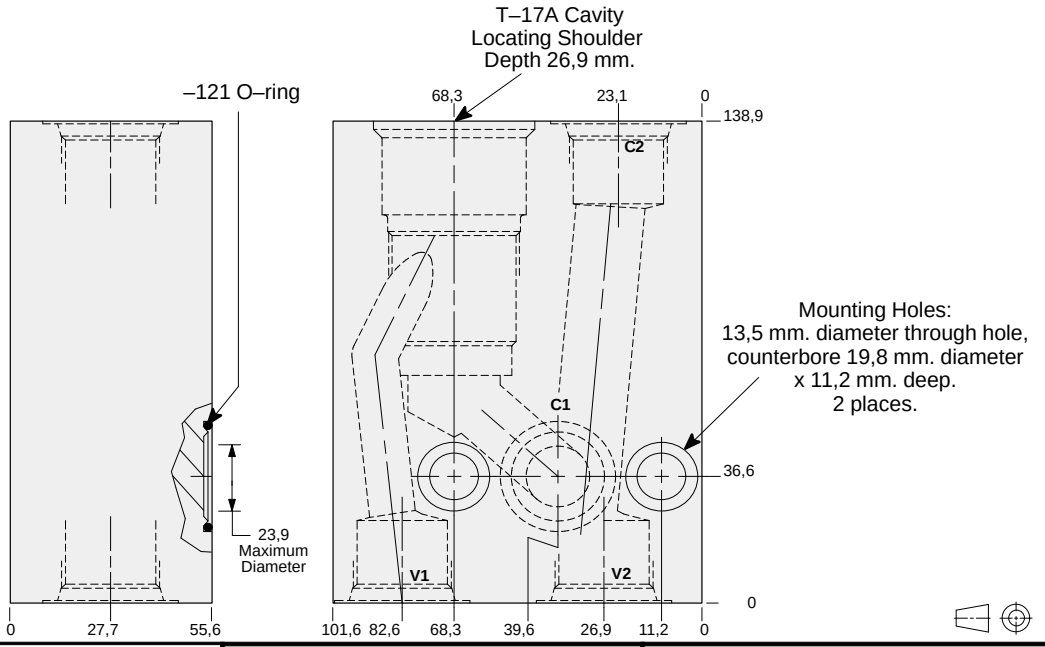

TYPICAL CARTRIDGES USED WITH THIS BODY

CBGA - *** Page 4.11
CBGG - *** Page 4.13
CBGH - *** Page 4.15
CKGB - *** Page 4.17

Cartridge seal type determines O–ring type.

Instructions for ordering complete cartridge and body assemblies. Page viii

Pressure ratings, material specifications. Page 11.02

Ports V1, V2, & C2	ALUMINIUM		SG IRON	
	Model Code	*List Price*	*Model Code*	*List Price*
.75 NPTF	**ZTJ**		**ZTJ/S**	
SAE-12	**ZTK**		**ZTK/S**	
.75 BSPP	**ZTL**		**ZTL/S**	

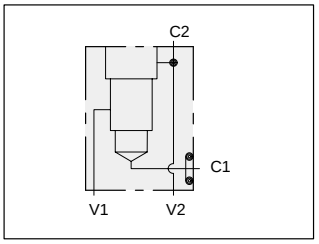

Gasket mount body for load control applications.

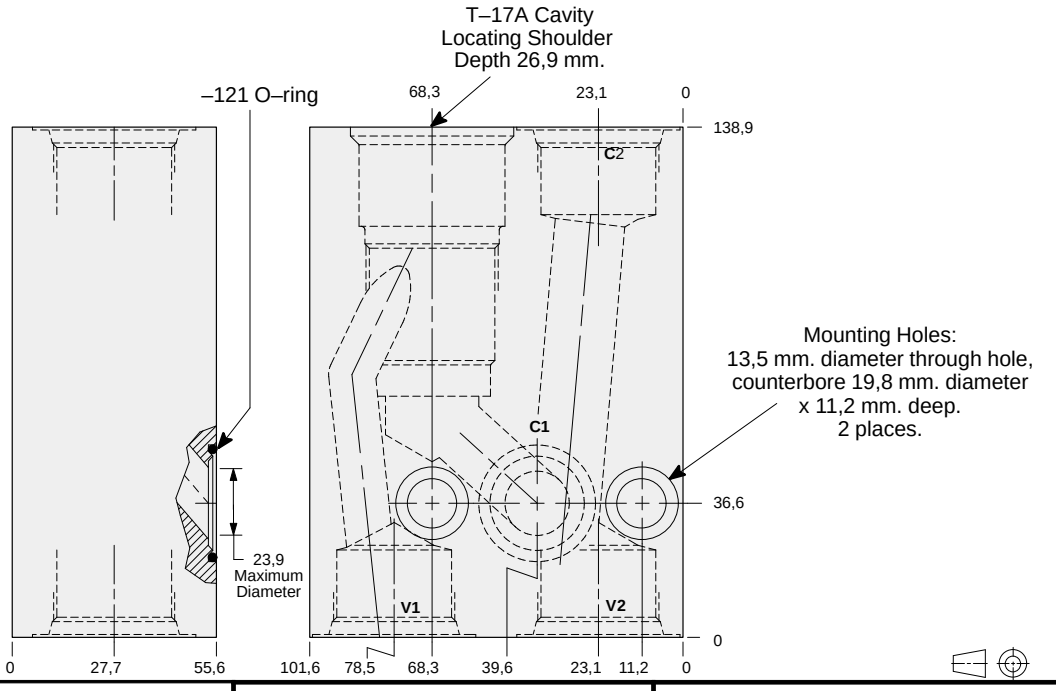

TYPICAL CARTRIDGES USED WITH THIS BODY

CBGA - *** Page 4.11
CBGG - *** Page 4.13
CBGH - *** Page 4.15
CKGB - *** Page 4.17

Cartridge seal type determines O–ring type.

Instructions for ordering complete cartridge and body assemblies. Page viii

Pressure ratings, material specifications. Page 11.02

Ports V1, V2, & C2	ALUMINIUM		SG IRON	
	Model Code	*List Price*	*Model Code*	*List Price*
SAE-16	**ZTM**		**ZTM/S**	

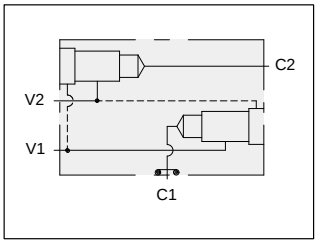

Two cavity gasket mount body for load control applications.

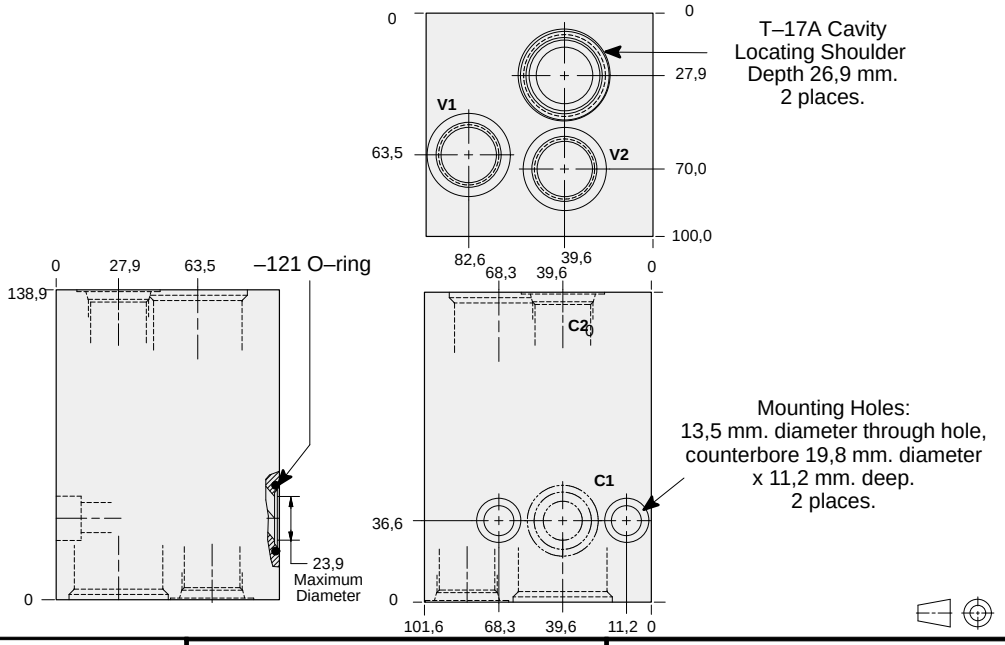

TYPICAL CARTRIDGES USED WITH THIS BODY

CBGA - *** Page 4.11
CBGG - *** Page 4.13
CBGH - *** Page 4.15
CKGB - *** Page 4.17

Cartridge seal type determines O–ring type.

Instructions for ordering complete cartridge and body assemblies. Page viii

Pressure ratings, material specifications. Page 11.02

Ports V1, V2, & C2	ALUMINIUM		SG IRON	
	Model Code	*List Price*	*Model Code*	*List Price*
.75 NPTF	**YVT**		**YVT/S**	
SAE-12	**YVS**		**YVS/S**	
.75 BSPP	**YVR**		**YVR/S**	

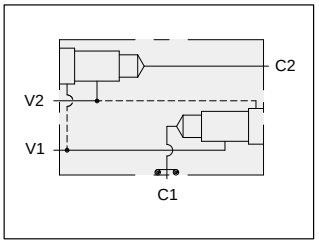

Two cavity gasket mount body for load control applications.

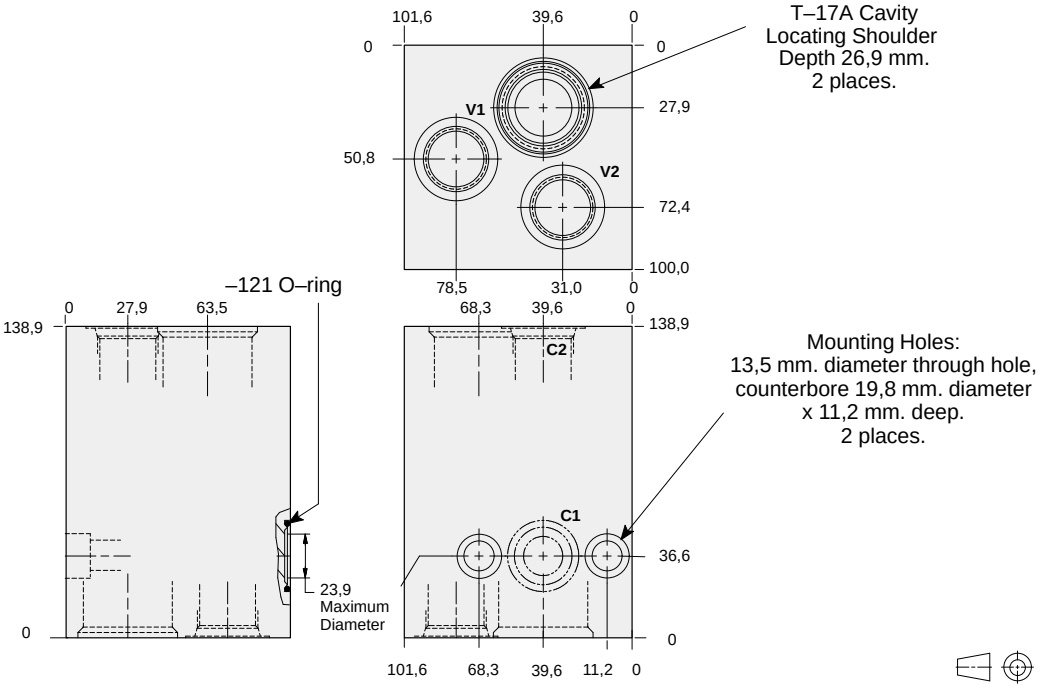

TYPICAL CARTRIDGES USED WITH THIS BODY

CBGA - *** Page 4.11
CBGG - *** Page 4.13
CBGH - *** Page 4.15
CKGB - *** Page 4.17

Cartridge seal type determines O–ring type.

Instructions for ordering complete cartridge and body assemblies. Page viii

Pressure ratings, material specifications. Page 11.02

Ports V1, V2, & C2	ALUMINIUM		SG IRON	
	Model Code	*List Price*	*Model Code*	*List Price*
SAE-16	**YVQ**		**YVQ/S**	

LINE MOUNT BODIES

- Aluminium rated to 210 bar and SG Iron rated to 350 bar.

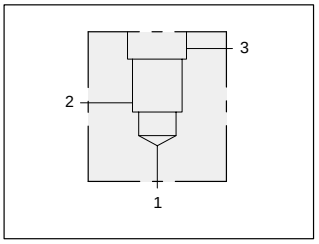

90 degree 1.00” SAE Code 61 flange port body.

Mounting Holes:
(opposite side)
Inch: .375-16 UNC-2B
x 15,7 mm. deep.
Metric: M10 x 1.50-6H
x 15,7 mm. deep.
2 places.

T–17A Cavity
Locating Shoulder
Depth 23,1 mm.

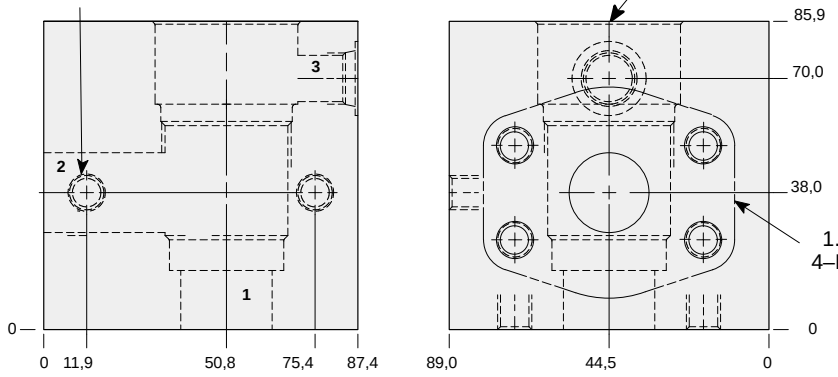

1.00” SAE Code 61
4–Bolt Flange Pattern
2 places.

TYPICAL CARTRIDGES USED WITH THIS BODY

RVGA - ***	Page	1.19
RSHC - ***	Page	2.07
SQHB - ***	Page	2.09
RSHE - ***	Page	2.11
SCGA - ***	Page	2.13
PBHB - ***	Page	3.07
PBHC - ***	Page	3.09
CBGA - ***	Page	4.11
CBGG - ***	Page	4.13
CBGH - ***	Page	4.15
CKGB - ***	Page	4.17
LOHC - ***	Page	9.09
LKHC - ***	Page	9.11
LPHC - ***	Page	9.13
LRHC - ***	Page	9.15
COHA - ***	Page	10.13
Instructions for ordering complete cartridge and body assemblies.	Page	viii
Pressure ratings, material specifications.	Page	11.02
SAE Specifications.	Page	11.03

Mounting Hole Dimensions	*Port 3*	ALUMINIUM		SG IRON	
		Model Code	*List Price*	*Model Code*	*List Price*
Inch	SAE-6	**HCP**		**HCP/S**	
Metric	.25 BSPP	**HCP/M**		**HCP/T**	

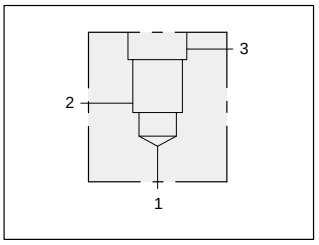

90 degree 1.00” SAE Code 62 flange port body.

Mounting Holes:
(opposite side)
Inch: .375-16 UNC-2B
x 15,7 mm. deep.
Metric: M10 x 1.50-6H
x 15,7 mm. deep.
2 places.

T–17A Cavity
Locating Shoulder
Depth 23,1 mm.

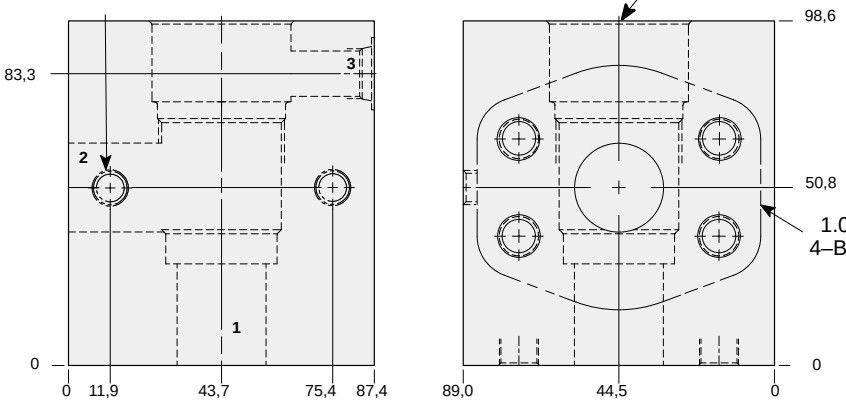

1.00” SAE Code 62
4–Bolt Flange Pattern
2 places.

TYPICAL CARTRIDGES USED WITH THIS BODY

RVGA - ***	Page	1.19
RSHC - ***	Page	2.07
SQHB - ***	Page	2.09
RSHE - ***	Page	2.11
SCGA - ***	Page	2.13
PBHB - ***	Page	3.07
PBHC - ***	Page	3.09
CBGA - ***	Page	4.11
CBGG - ***	Page	4.13
CBGH - ***	Page	4.15
CKGB - ***	Page	4.17
LOHC - ***	Page	9.09
LKHC - ***	Page	9.11
LPHC - ***	Page	9.13
LRHC - ***	Page	9.15
COHA - ***	Page	10.13
Instructions for ordering complete cartridge and body assemblies.	Page	viii
Pressure ratings, material specifications.	Page	11.02
SAE Specifications.	Page	11.03

Mounting Hole Dimensions	*Port 3*	ALUMINIUM		SG IRON	
		Model Code	*List Price*	*Model Code*	*List Price*
Inch	SAE-6	**HC4**		**HC4/S**	
Metric	.25 BSPP	**HC4/M**		**HC4/T**	

LINE MOUNT BODIES

- Aluminium rated to 210 bar and SG Iron rated to 350 bar.

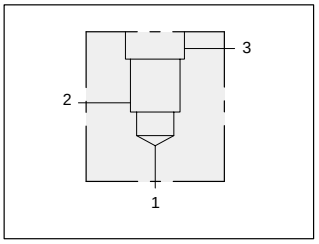

90 degree 1.25” SAE Code 61 flange port body.

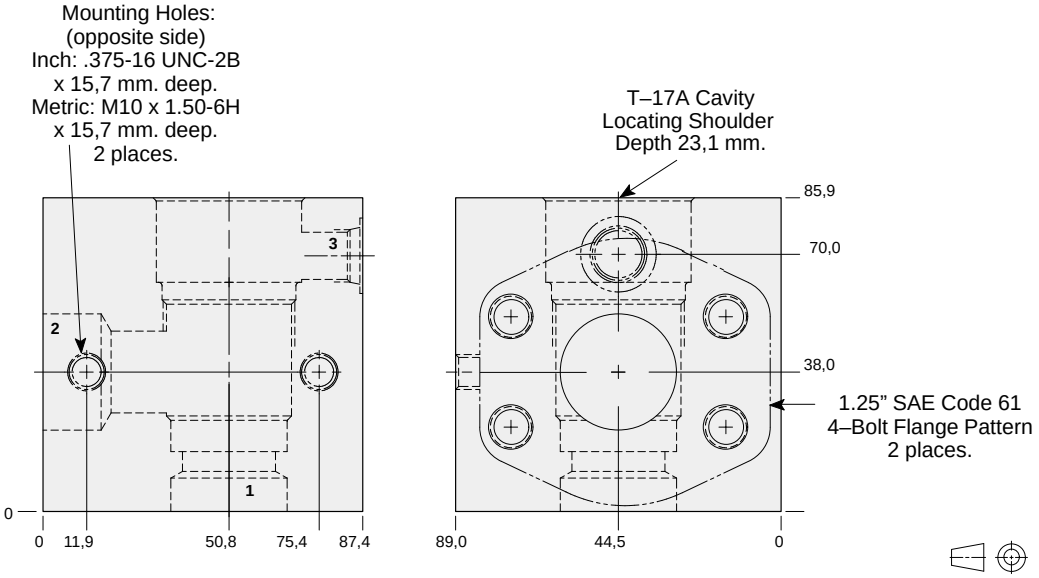

TYPICAL CARTRIDGES USED WITH THIS BODY

RVGA - ***	Page	1.19
RSHC - ***	Page	2.07
SQHB - ***	Page	2.09
RSHE - ***	Page	2.11
SCGA - ***	Page	2.13
PBHB - ***	Page	3.07
PBHC - ***	Page	3.09
CBGA - ***	Page	4.11
CBGG - ***	Page	4.13
CBGH - ***	Page	4.15
CKGB - ***	Page	4.17
LOHC - ***	Page	9.09
LKHC - ***	Page	9.11
LPHC - ***	Page	9.13
LRHC - ***	Page	9.15
COHA - ***	Page	10.13

Instructions for ordering complete cartridge and body assemblies. Page viii

Pressure ratings, material specifications. Page 11.02

SAE Specifications. Page 11.03

Mounting Hole Dimensions	*Port 3*	ALUMINIUM		SG IRON	
		Model Code	*List Price*	*Model Code*	*List Price*
Inch	SAE-6	**HCQ**		**HCQ/S**	
Metric	.25 BSPP	**HCQ/M**		**HCQ/T**	

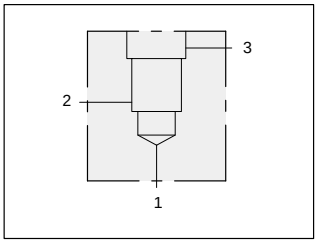

90 degree 1.25” SAE Code 62 flange port body.

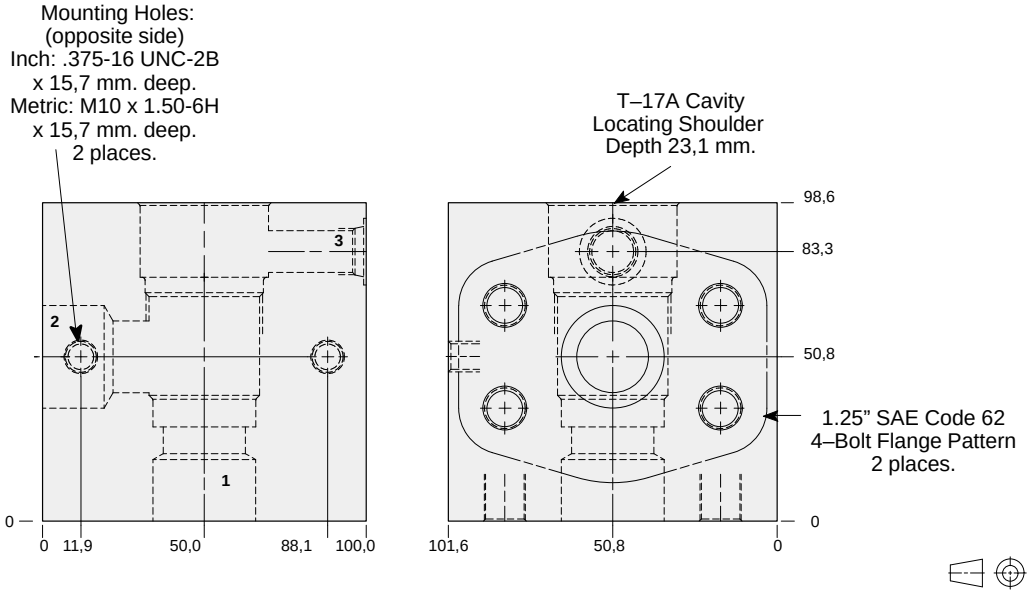

TYPICAL CARTRIDGES USED WITH THIS BODY

RVGA - ***	Page	1.19
RSHC - ***	Page	2.07
SQHB - ***	Page	2.09
RSHE - ***	Page	2.11
SCGA - ***	Page	2.13
PBHB - ***	Page	3.07
PBHC - ***	Page	3.09
CBGA - ***	Page	4.11
CBGG - ***	Page	4.13
CBGH - ***	Page	4.15
CKGB - ***	Page	4.17
LOHC - ***	Page	9.09
LKHC - ***	Page	9.11
LPHC - ***	Page	9.13
LRHC - ***	Page	9.15
COHA - ***	Page	10.13

Instructions for ordering complete cartridge and body assemblies. Page viii

Pressure ratings, material specifications. Page 11.02

SAE Specifications. Page 11.03

Mounting Hole Dimensions	*Port 3*	ALUMINIUM		SG IRON	
		Model Code	*List Price*	*Model Code*	*List Price*
Inch	SAE-6	**HC5**		**HC5/S**	
Metric	.25 BSPP	**HC5/M**		**HC5/T**	

LINE MOUNT BODIES

- Aluminium rated to 210 bar and SG Iron rated to 350 bar.

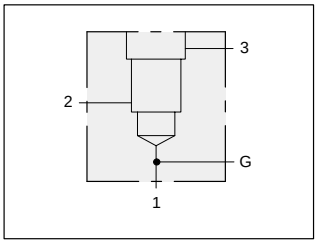

90 degree 1.00” SAE Code 61 flange port body with gauge port.

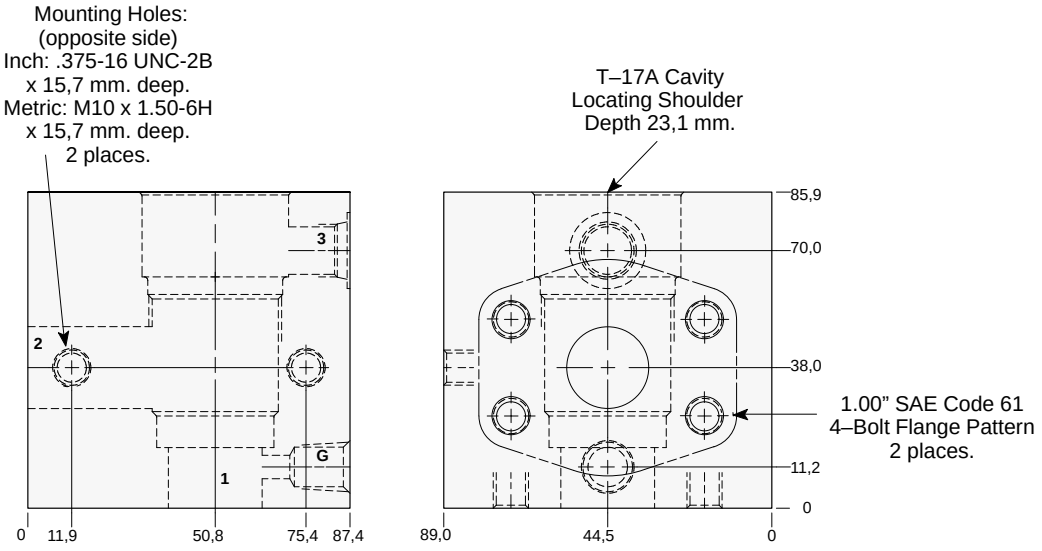

TYPICAL CARTRIDGES USED WITH THIS BODY

RVGA - ***	Page	1.19
RSHC - ***	Page	2.07
SQHB - ***	Page	2.09
RSHE - ***	Page	2.11
SCGA - ***	Page	2.13
PBHB - ***	Page	3.07
PBHC - ***	Page	3.09
CBGA - ***	Page	4.11
CBGG - ***	Page	4.13
CBGH - ***	Page	4.15
CKGB - ***	Page	4.17
LOHC - ***	Page	9.09
LKHC - ***	Page	9.11
LPHC - ***	Page	9.13
LRHC - ***	Page	9.15
COHA - ***	Page	10.13
Instructions for ordering complete cartridge and body assemblies.	Page	viii
Pressure ratings, material specifications.	Page	11.02
SAE Specifications.	Page	11.03

Mounting Hole Dimensions	*Port 3*	*Gauge Port*	ALUMINIUM		SG IRON	
			Model Code	*List Price*	*Model Code*	*List Price*
Inch	SAE-6	.25 NPTF	**HFP**		**HFP/S**	
Metric	.25 BSPP	.25 BSPP	**HFP/M**		**HFP/T**	

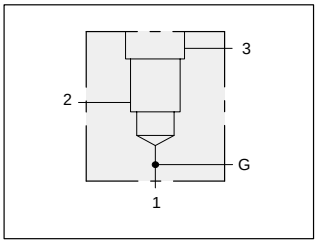

90 degree 1.00” SAE Code 62 flange port body with gauge port.

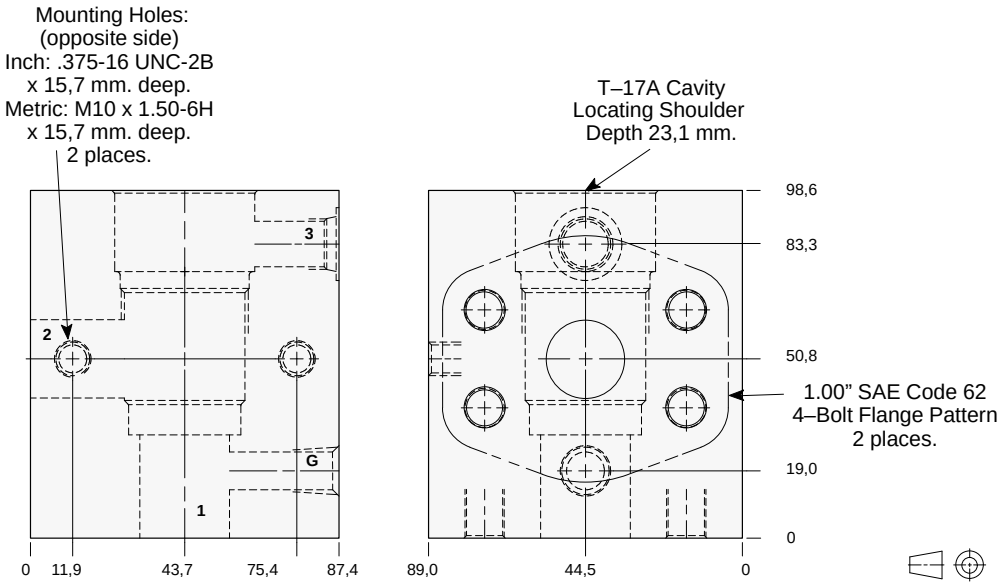

TYPICAL CARTRIDGES USED WITH THIS BODY

RVGA - ***	Page	1.19
RSHC - ***	Page	2.07
SQHB - ***	Page	2.09
RSHE - ***	Page	2.11
SCGA - ***	Page	2.13
PBHB - ***	Page	3.07
PBHC - ***	Page	3.09
CBGA - ***	Page	4.11
CBGG - ***	Page	4.13
CBGH - ***	Page	4.15
CKGB - ***	Page	4.17
LOHC - ***	Page	9.09
LKHC - ***	Page	9.11
LPHC - ***	Page	9.13
LRHC - ***	Page	9.15
COHA - ***	Page	10.13
Instructions for ordering complete cartridge and body assemblies.	Page	viii
Pressure ratings, material specifications.	Page	11.02
SAE Specifications.	Page	11.03

Mounting Hole Dimensions	*Port 3*	*Gauge Port*	ALUMINIUM		SG IRON	
			Model Code	*List Price*	*Model Code*	*List Price*
Inch	SAE-6	.25 NPTF	**HF4**		**HF4/S**	
Metric	.25 BSPP	.25 BSPP	**HF4/M**		**HF4/T**	

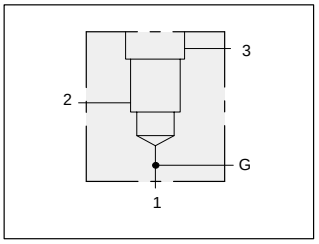

90 degree 1.25” SAE Code 61 flange port body with gauge port.

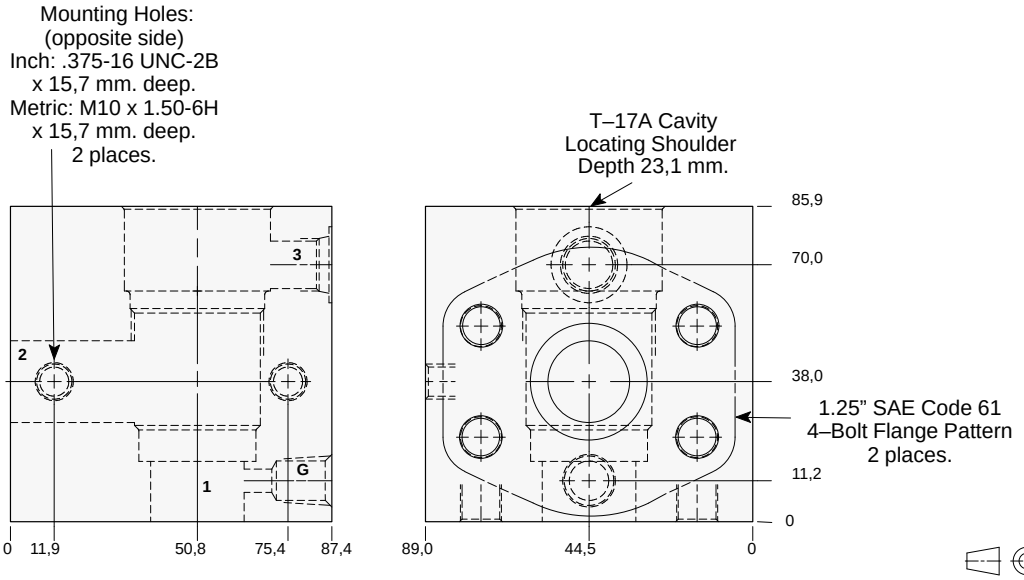

TYPICAL CARTRIDGES USED WITH THIS BODY

RVGA - ***	Page	1.19
RSHC - ***	Page	2.07
SQHB - ***	Page	2.09
RSHE - ***	Page	2.11
SCGA - ***	Page	2.13
PBHB - ***	Page	3.07
PBHC - ***	Page	3.09
CBGA - ***	Page	4.11
CBGG - ***	Page	4.13
CBGH - ***	Page	4.15
CKGB - ***	Page	4.17
LOHC - ***	Page	9.09
LKHC - ***	Page	9.11
LPHC - ***	Page	9.13
LRHC - ***	Page	9.15
COHA - ***	Page	10.13

Instructions for ordering complete cartridge and body assemblies.	Page	viii
Pressure ratings, material specifications.	Page	11.02
SAE Specifications.	Page	11.03

Mounting Hole Dimensions	*Port 3*	*Gauge Port*	ALUMINIUM		SG IRON	
			Model Code	*List Price*	*Model Code*	*List Price*
Inch	SAE-6	.25 NPTF	**HFQ**		**HFQ/S**	
Metric	.25 BSPP	.25 BSPP	**HFQ/M**		**HFQ/T**	

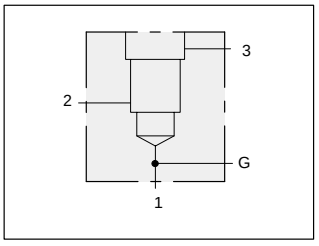

90 degree 1.25” SAE Code 62 flange port body with gauge port.

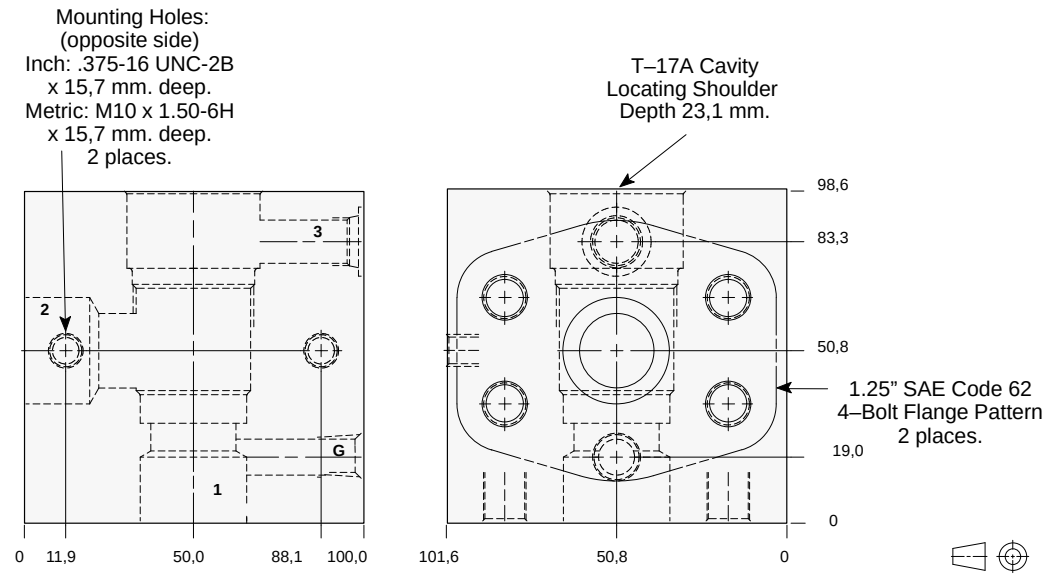

TYPICAL CARTRIDGES USED WITH THIS BODY

RVGA - ***	Page	1.19
RSHC - ***	Page	2.07
SQHB - ***	Page	2.09
RSHE - ***	Page	2.11
SCGA - ***	Page	2.13
PBHB - ***	Page	3.07
PBHC - ***	Page	3.09
CBGA - ***	Page	4.11
CBGG - ***	Page	4.13
CBGH - ***	Page	4.15
CKGB - ***	Page	4.17
LOHC - ***	Page	9.09
LKHC - ***	Page	9.11
LPHC - ***	Page	9.13
LRHC - ***	Page	9.15
COHA - ***	Page	10.13

Instructions for ordering complete cartridge and body assemblies.	Page	viii
Pressure ratings, material specifications.	Page	11.02
SAE Specifications.	Page	11.03

Mounting Hole Dimensions	*Port 3*	*Gauge Port*	ALUMINIUM		SG IRON	
			Model Code	*List Price*	*Model Code*	*List Price*
Inch	SAE-6	.25 NPTF	**HF5**		**HF5/S**	
Metric	.25 BSPP	.25 BSPP	**HF5/M**		**HF5/T**	

LINE MOUNT BODIES

- Aluminium rated to 210 bar and SG Iron rated to 350 bar.

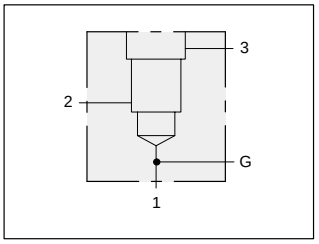

TYPICAL CARTRIDGES USED WITH THIS BODY

PPHB	- ***	Page	3.11
PPHC	- ***	Page	3.13
FREA	- ***	Page	6.03

Instructions for ordering complete cartridge and body assemblies.	Page	viii
Pressure ratings, material specifications.	Page	11.02
SAE Specifications.	Page	11.03

90 degree 1.00” SAE Code 61 flange port body with high capacity port 3 and gauge port.

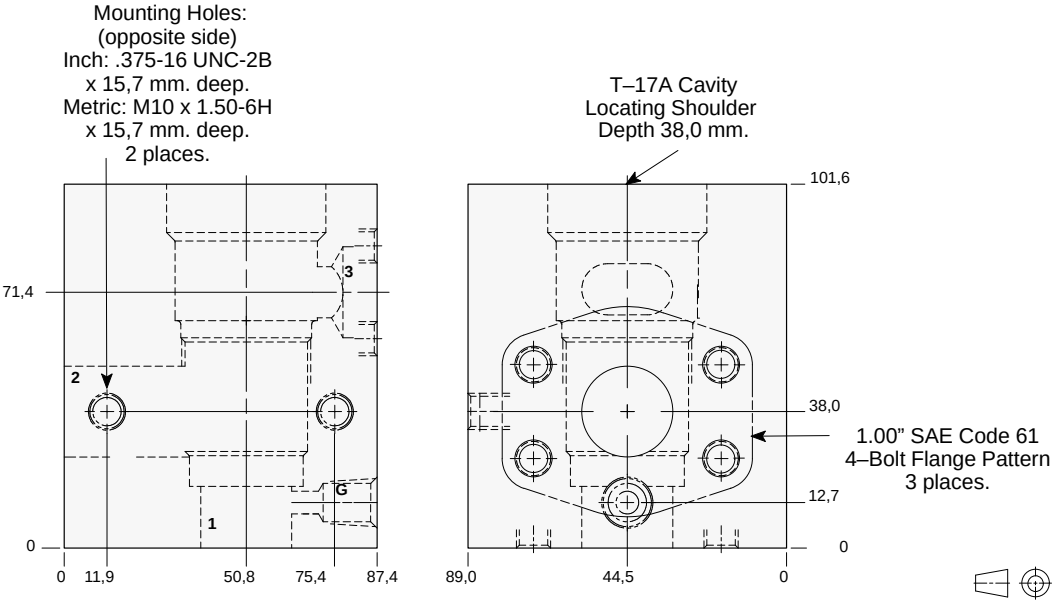

Mounting Hole Dimensions	*Gauge Port*	ALUMINIUM		SG IRON	
		Model Code	*List Price*	*Model Code*	*List Price*
Inch	.25 NPTF	**HEP**		**HEP/S**	
Metric	.25 BSPP	**HEP/M**		**HEP/T**	

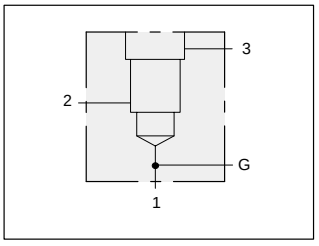

TYPICAL CARTRIDGES USED WITH THIS BODY

PPHB	- ***	Page	3.11
PPHC	- ***	Page	3.13
FREA	- ***	Page	6.03

Instructions for ordering complete cartridge and body assemblies.	Page	viii
Pressure ratings, material specifications.	Page	11.02
SAE Specifications.	Page	11.03

90 degree 1.00” SAE Code 62 flange port body with high capacity port 3 and gauge port.

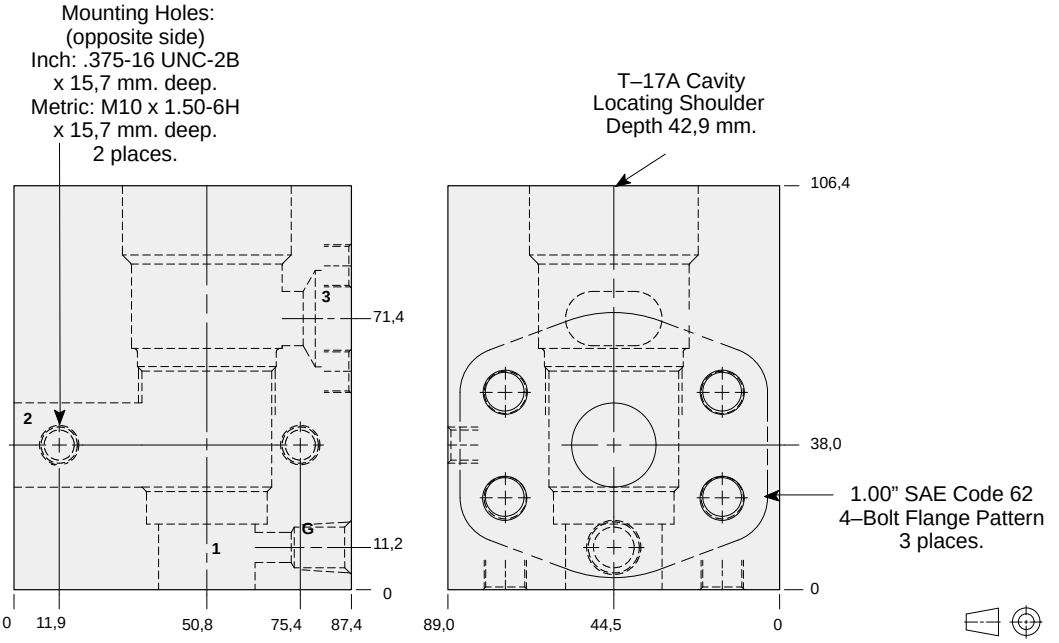

Mounting Hole Dimensions	*Gauge Port*	ALUMINIUM		SG IRON	
		Model Code	*List Price*	*Model Code*	*List Price*
Inch	.25 NPTF	**HE4**		**HE4/S**	
Metric	.25 BSPP	**HE4/M**		**HE4/T**	

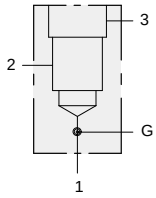

90 degree 1.25” SAE Code 61 flange port body with high capacity port 3 and gauge port.

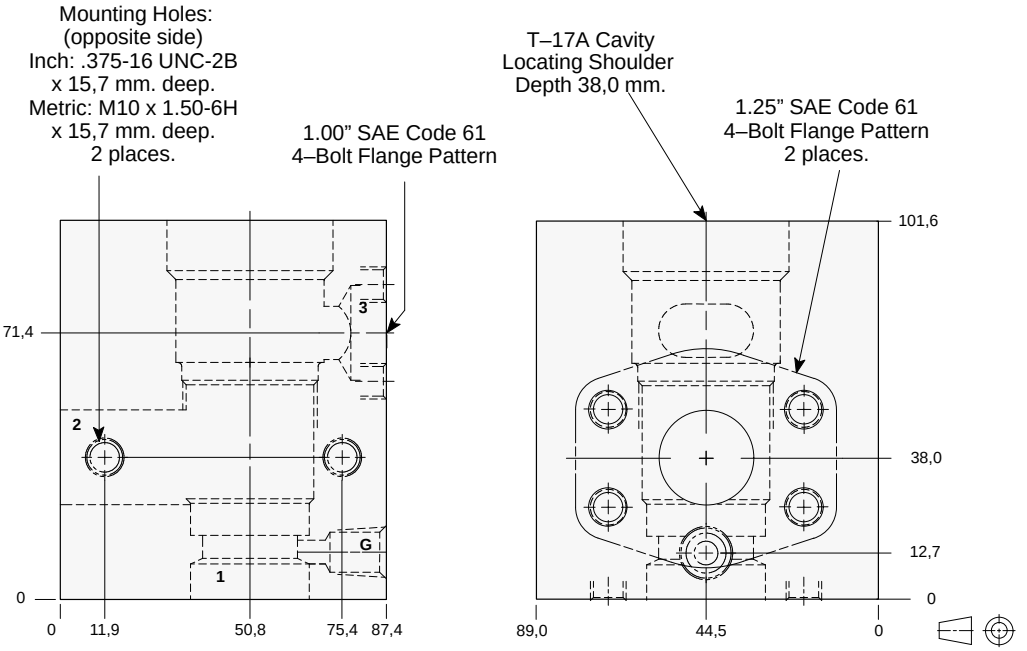

TYPICAL CARTRIDGES USED WITH THIS BODY

PPHB - *** Page 3.11
PPHC - *** Page 3.13
FREA - *** Page 6.03

Instructions for ordering complete cartridge and body assemblies. Page viii

Pressure ratings, material specifications. Page 11.02

SAE Specifications. Page 11.03

Mounting Hole Dimensions	*Gauge Port*	ALUMINIUM		SG IRON	
		Model Code	*List Price*	*Model Code*	*List Price*
Inch	.25 NPTF	**HEQ**		**HEQ/S**	
Metric	.25 BSPP	**HEQ/M**		**HEQ/T**	

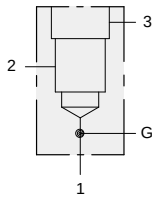

90 degree 1.25” SAE Code 62 flange port body with high capacity port 3 and gauge port.

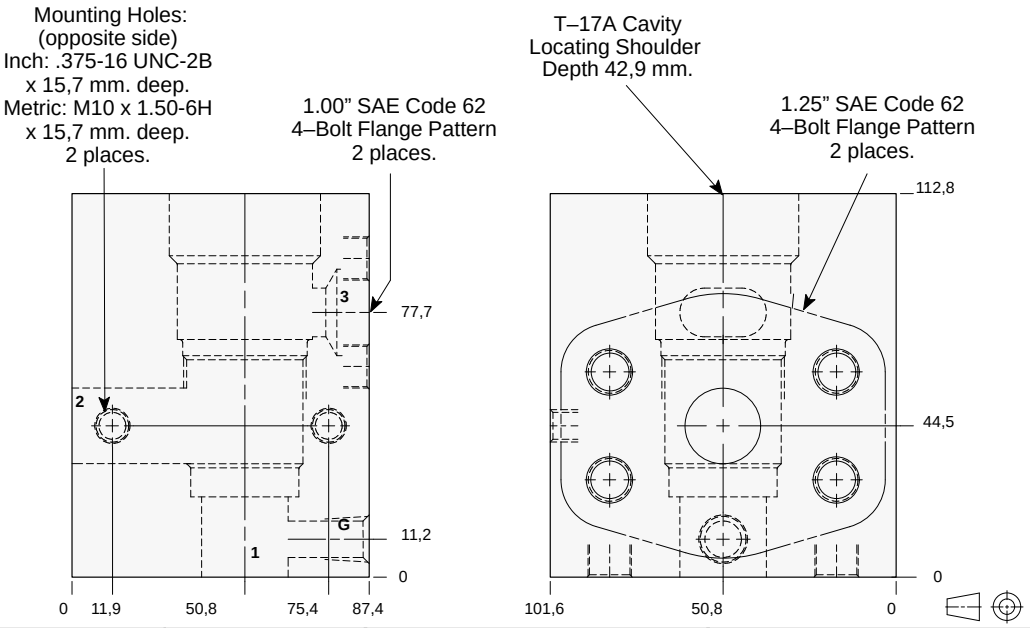

TYPICAL CARTRIDGES USED WITH THIS BODY

PPHB - *** Page 3.11
PPHC - *** Page 3.13
FREA - *** Page 6.03

Instructions for ordering complete cartridge and body assemblies. Page viii

Pressure ratings, material specifications. Page 11.02

SAE Specifications. Page 11.03

Mounting Hole Dimensions	*Gauge Port*	ALUMINIUM		SG IRON	
		Model Code	*List Price*	*Model Code*	*List Price*
Inch	.25 NPTF	**HE5**		**HE5/S**	
Metric	.25 BSPP	**HE5/M**		**HE5/T**	

LINE MOUNT BODIES

- Aluminium rated to 210 bar and SG Iron rated to 350 bar.

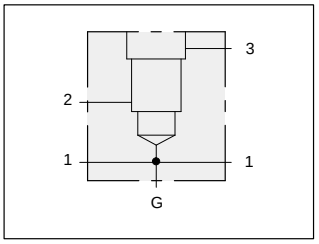

TYPICAL CARTRIDGES USED WITH THIS BODY

RVGA - ***	Page	1.19
RSHC - ***	Page	2.07
SQHB - ***	Page	2.09
RSHE - ***	Page	2.11
SCGA - ***	Page	2.13
PBHB - ***	Page	3.07
PBHC - ***	Page	3.09

Instructions for ordering complete cartridge and body assemblies. Page viii

Pressure ratings, material specifications. Page 11.02

SAE Specifications. Page 11.03

Through port 1.00” SAE Code 61 flange port body with gauge port.

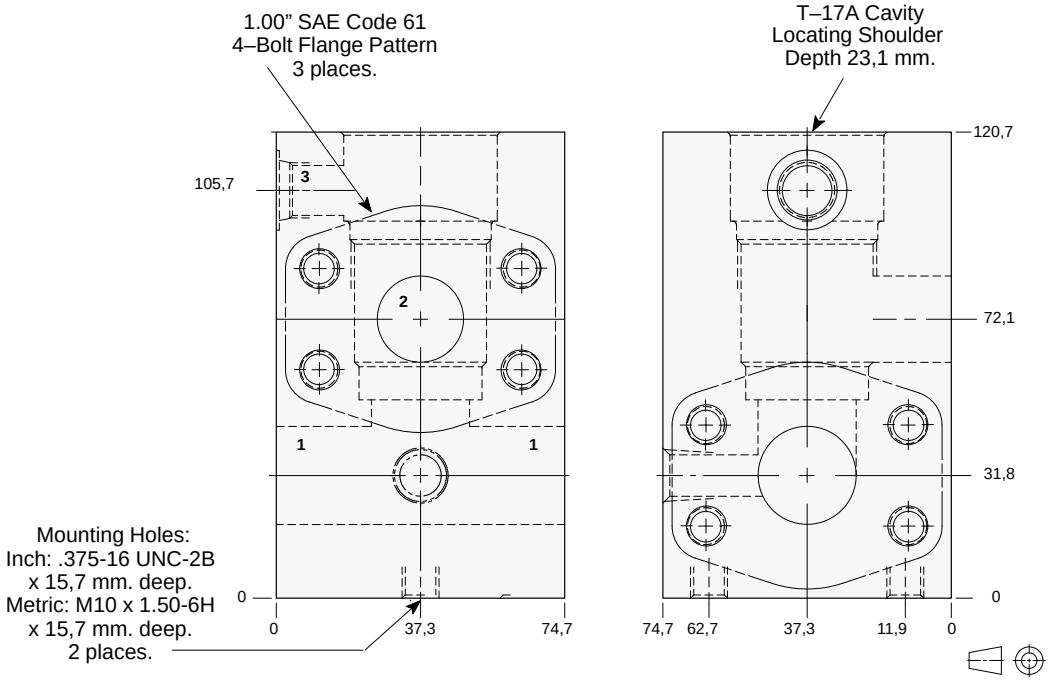

Mounting Hole Dimensions	*Port 3*	*Gauge Port*	ALUMINIUM		SG IRON	
			Model Code	*List Price*	*Model Code*	*List Price*
Inch	SAE-6	.25 NPTF	**HHP**		**HHP/S**	
Metric	.25 BSPP	.25 BSPP	**HHP/M**		**HHP/T**	

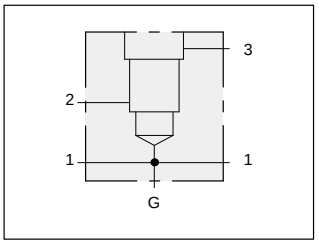

TYPICAL CARTRIDGES USED WITH THIS BODY

RVGA - ***	Page	1.19
RSHC - ***	Page	2.07
SQHB - ***	Page	2.09
RSHE - ***	Page	2.11
SCGA - ***	Page	2.13
PBHB - ***	Page	3.07
PBHC - ***	Page	3.09

Instructions for ordering complete cartridge and body assemblies. Page viii

Pressure ratings, material specifications. Page 11.02

SAE Specifications. Page 11.03

Through port 1.00” SAE Code 62 flange port body with gauge port.

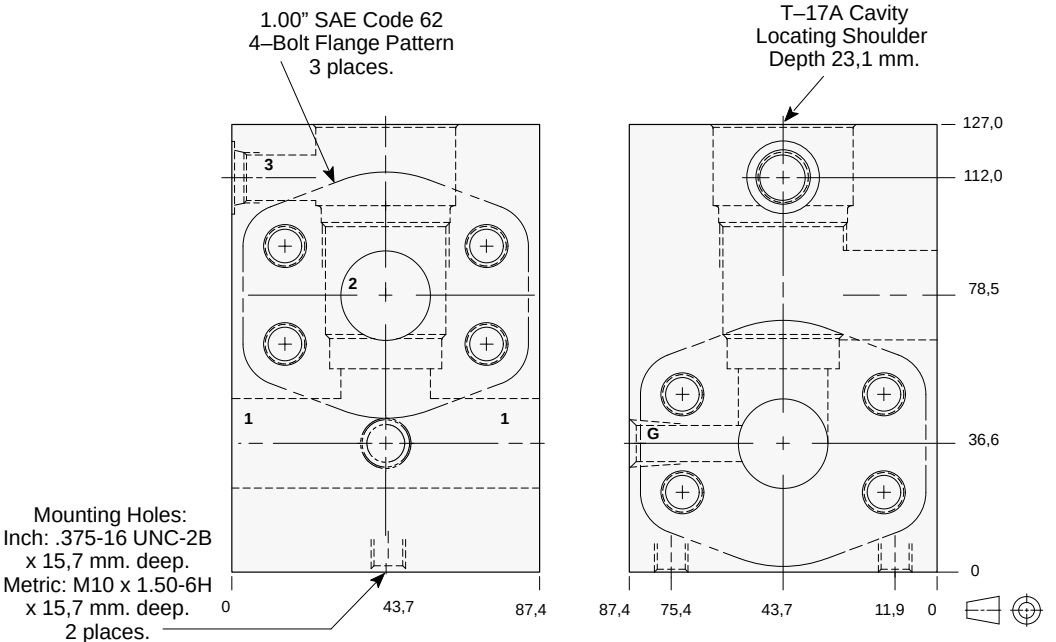

Mounting Hole Dimensions	*Port 3*	*Gauge Port*	ALUMINIUM		SG IRON	
			Model Code	*List Price*	*Model Code*	*List Price*
Inch	SAE-6	.25 NPTF	**HH4**		**HH4/S**	
Metric	.25 BSPP	.25 BSPP	**HH4/M**		**HH4/T**	

- Aluminium rated to 210 bar and SG Iron rated to 350 bar.

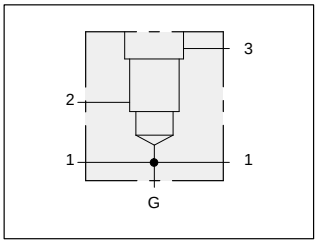

TYPICAL CARTRIDGES USED WITH THIS BODY

RVGA - ***	Page	1.19
RSHC - ***	Page	2.07
SQHB - ***	Page	2.09
RSHE - ***	Page	2.11
SCGA - ***	Page	2.13
PPHB - ***	Page	3.11
PPHC - ***	Page	3.13

Instructions for ordering complete cartridge and body assemblies. Page viii

Pressure ratings, material specifications. Page 11.02

SAE Specifications. Page 11.03

Through port 1.25” SAE Code 61 flange port body with gauge port.

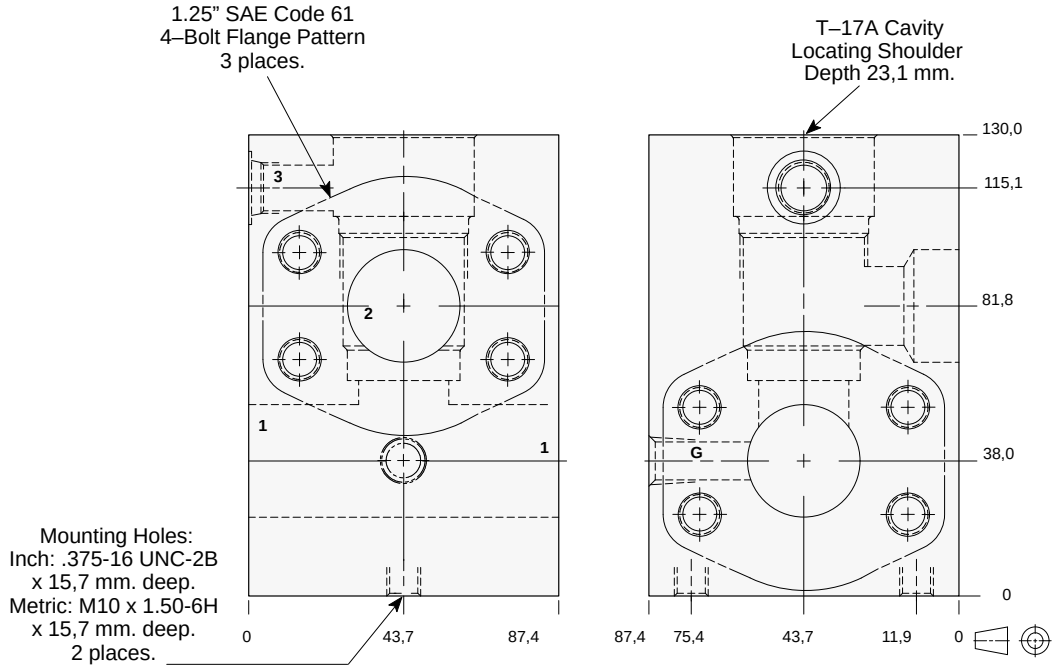

Mounting Hole Dimensions	*Port 3*	*Gauge Port*	ALUMINIUM		SG IRON	
			Model Code	*List Price*	*Model Code*	*List Price*
Inch	SAE-6	.25 NPTF	**HHQ**		**HHQ/S**	
Metric	.25 BSPP	.25 BSPP	**HHQ/M**		**HHQ/T**	

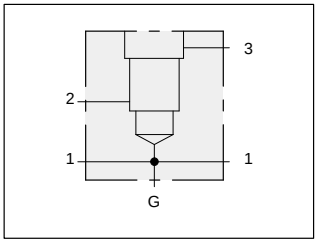

TYPICAL CARTRIDGES USED WITH THIS BODY

RVGA - ***	Page	1.19
RSHC - ***	Page	2.07
SQHB - ***	Page	2.09
RSHE - ***	Page	2.11
SCGA - ***	Page	2.13
PPHB - ***	Page	3.11
PPHC - ***	Page	3.13

Instructions for ordering complete cartridge and body assemblies. Page viii

Pressure ratings, material specifications. Page 11.02

SAE Specifications. Page 11.03

Through port 1.25” SAE Code 62 flange port body with gauge port.

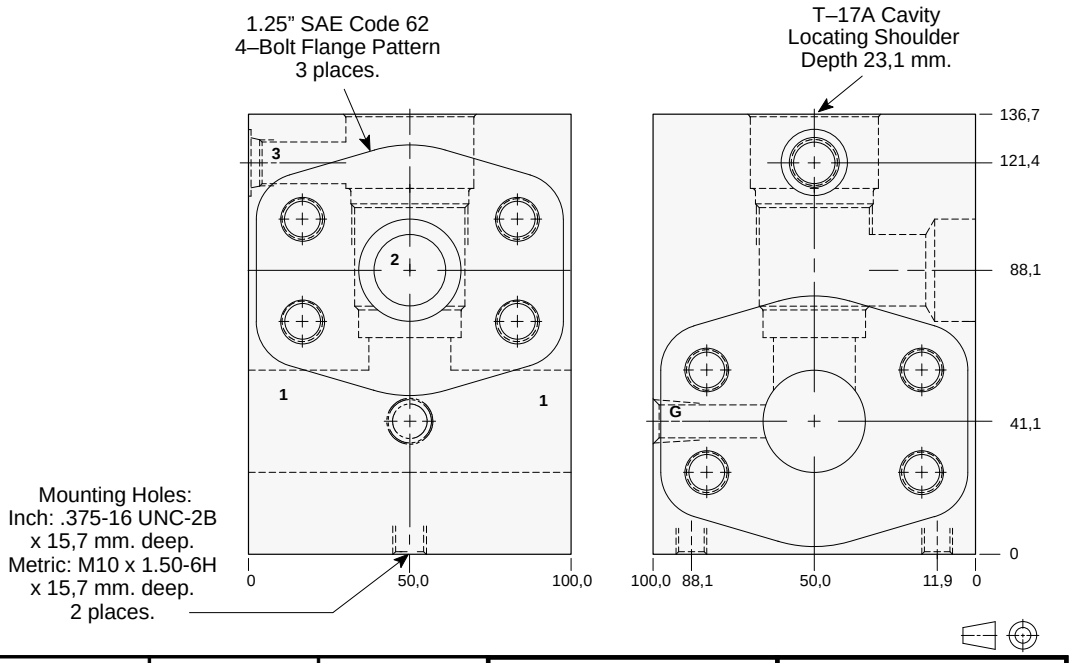

Mounting Hole Dimensions	*Port 3*	*Gauge Port*	ALUMINIUM		SG IRON	
			Model Code	*List Price*	*Model Code*	*List Price*
Inch	SAE-6	.25 NPTF	**HH5**		**HH5/S**	
Metric	.25 BSPP	.25 BSPP	**HH5/M**		**HH5/T**	

LINE MOUNT BODIES

- Aluminium rated to 210 bar and SG Iron rated to 350 bar.

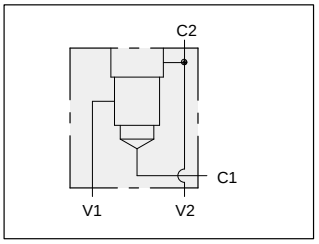

Nipple mount body for load control applications.

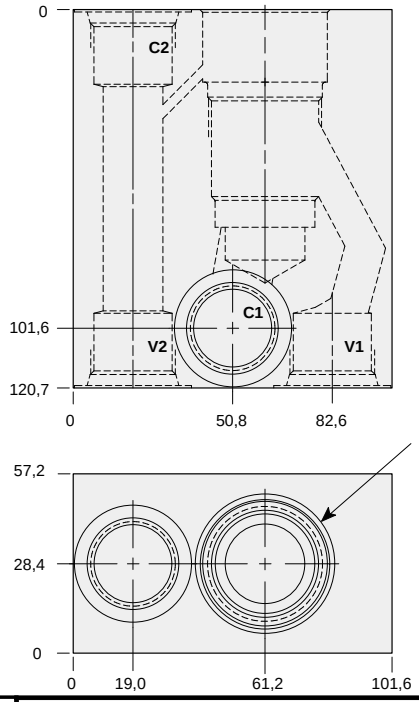

TYPICAL CARTRIDGES USED WITH THIS BODY

CBGA - *** Page 4.11
CBGG - *** Page 4.13
CBGH - *** Page 4.15
CKGB - *** Page 4.17

Instructions for ordering complete cartridge and body assemblies. Page viii

Pressure ratings, material specifications. Page 11.02

Ports V1, V2, C1, & C2	ALUMINIUM		SG IRON	
	Model Code	*List Price*	*Model Code*	*List Price*
SAE-12	**ZRN**		**ZRN/S**	
.25 BSPP	**ZTW**		**ZTW/S**	

- Aluminium rated to 210 bar and SG Iron rated to 350 bar.

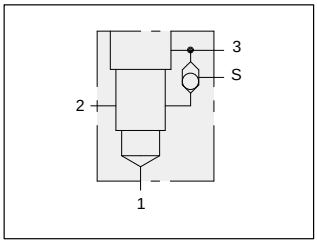

90 degree body with shuttle for load control applications

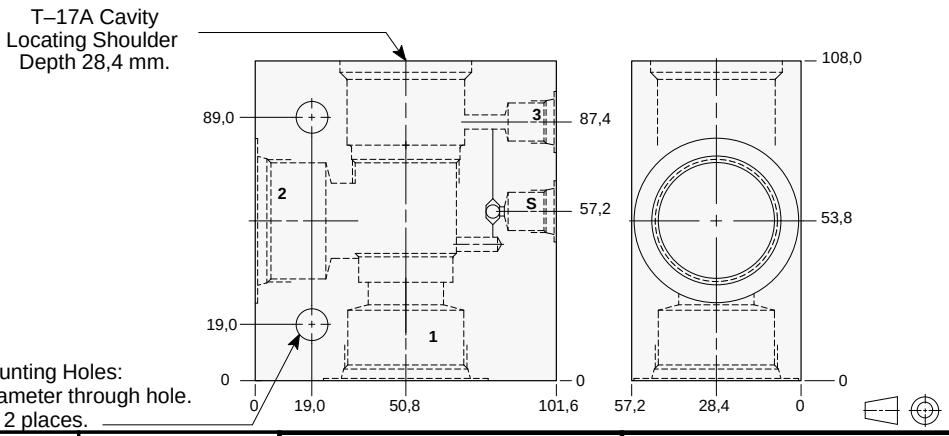

TYPICAL CARTRIDGES USED WITH THIS BODY

CBGA - *** Page 4.11
CBGG - *** Page 4.13
CBGH - *** Page 4.15
CKGB - *** Page 4.17

Instructions for ordering complete cartridge and body assemblies. Page viii

Pressure ratings, material specifications. Page 11.02

Ports 1 & 2	*Ports S & 3*	ALUMINIUM		SG IRON	
		Model Code	*List Price*	*Model Code*	*List Price*
.75 NPTF	.25 NPTF	**HGD**		**HGD/S**	
1.00 NPTF	.25 NPTF	**HGE**		**HGE/S**	
1.25 NPTF	.25 NPTF	**HGF**		**HGF/S**	
SAE-12	SAE-6	**HGL**		**HGL/S**	
SAE-16	SAE-6	**HGM**		**HGM/S**	
SAE-20	SAE-6	**HGN**		**HGN/S**	
.75 BSPP	.25 BSPP	**HGW**		**HGW/S**	
1.00 BSPP	.25 BSPP	**HGX**		**HGX/S**	
1.25 BSPP	.25 BSPP	**HGY**		**HGY/S**	

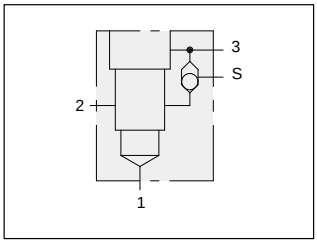

90 degree 1.00” SAE Code 61 flange port body with shuttle for load control applications.

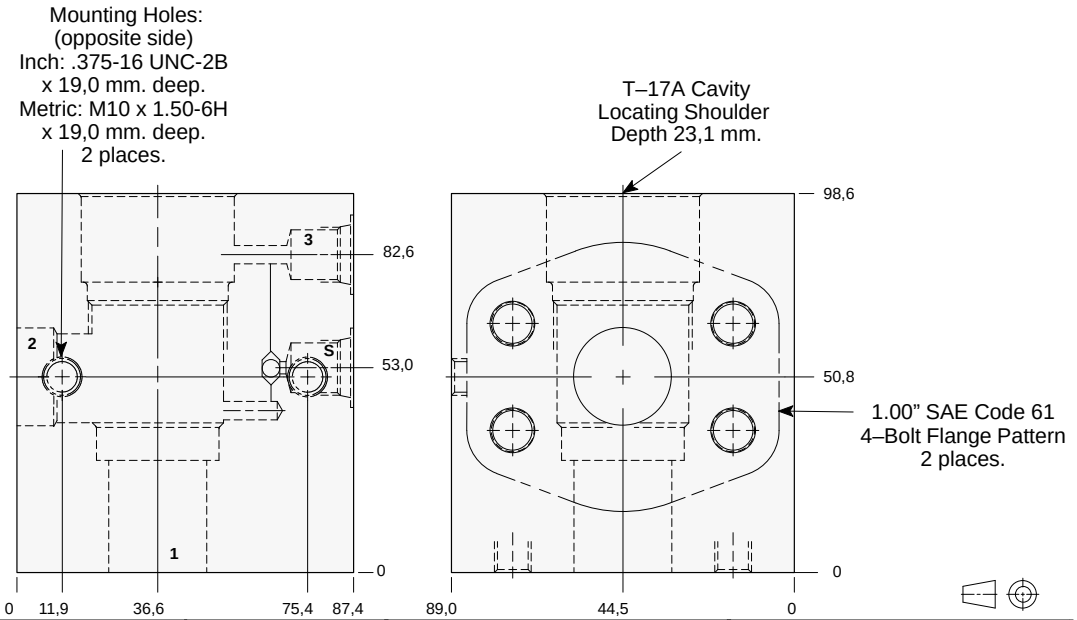

TYPICAL CARTRIDGES USED WITH THIS BODY

CBGA - *** Page 4.11
CBGG - *** Page 4.13
CBGH - *** Page 4.15
CKGB - *** Page 4.17

Instructions for ordering complete cartridge and body assemblies. Page viii

Pressure ratings, material specifications. Page 11.02

Mounting Hole Dimensions	*Ports S & 3*	ALUMINIUM		SG IRON	
		Model Code	*List Price*	*Model Code*	*List Price*
Inch	SAE-6	**HGP**		**HGP/S**	
Metric	.25 BSPP	**HGP/M**		**HGP/T**	

LINE MOUNT BODIES

- Aluminium rated to 210 bar and SG Iron rated to 350 bar.

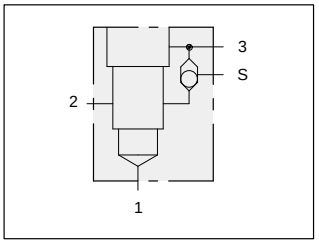

90 degree 1.25” SAE Code 61 flange port body with shuttle for load control applications.

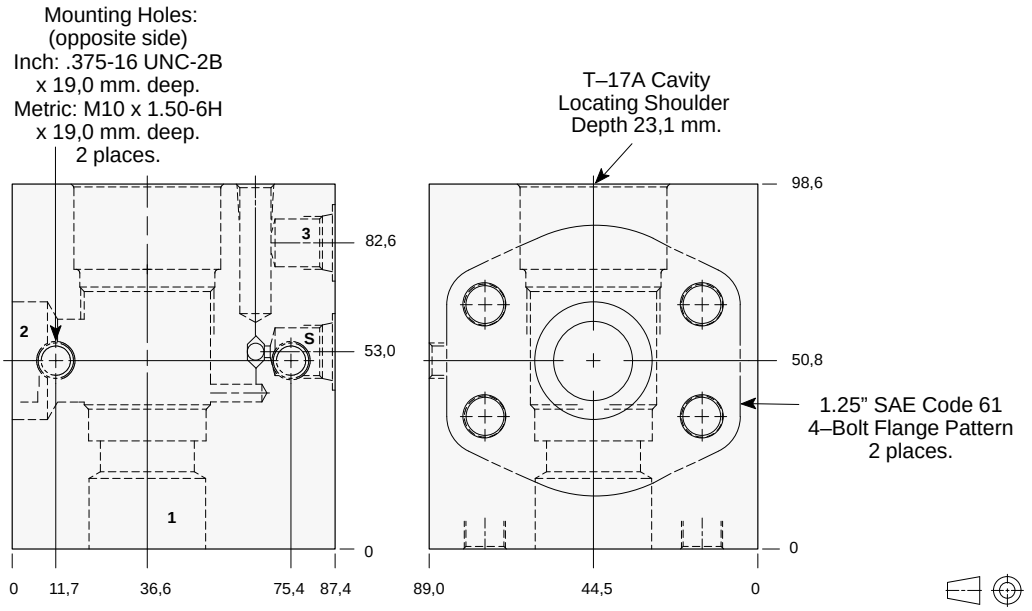

TYPICAL CARTRIDGES USED WITH THIS BODY

CBGA - *** Page 4.11
CBGG - *** Page 4.13
CBCH - *** Page 4.41
CKGB - *** Page 4.17

Instructions for ordering complete cartridge and body assemblies. Page viii
Pressure ratings, material specifications. Page 11.02
SAE Specifications. Page 11.03

Mounting Hole Dimensions	*Ports S & 3*	ALUMINIUM		SG IRON	
		Model Code	*List Price*	*Model Code*	*List Price*
Inch	SAE-6	**HGQ**		**HGQ/S**	
Metric	.25 BSPP	**HGQ/M**		**HGQ/T**	

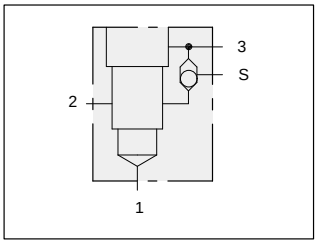

90 degree 1.25” SAE Code 62 flange port body with shuttle for load control applications.

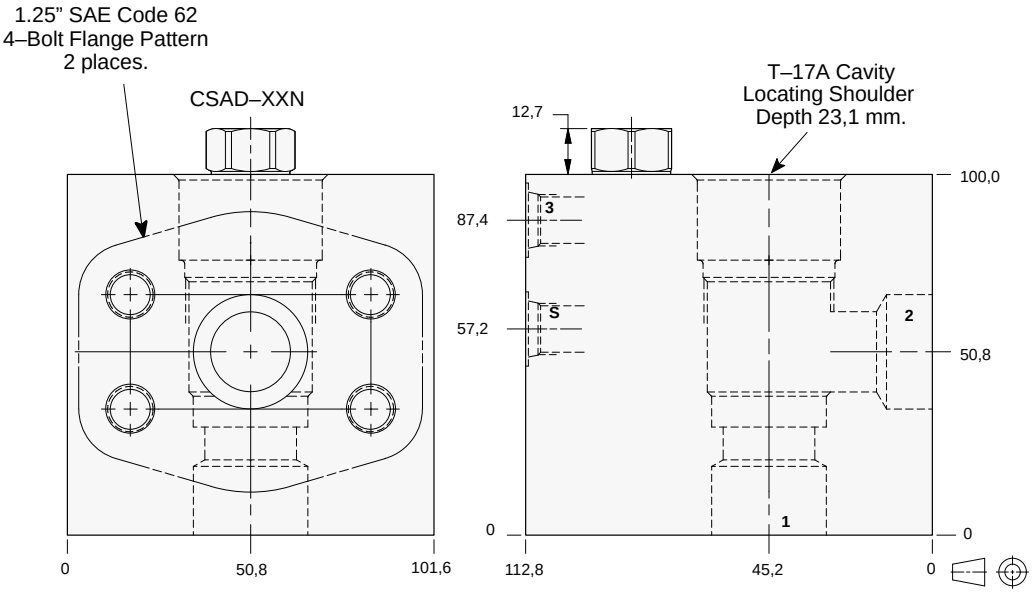

TYPICAL CARTRIDGES USED WITH THIS BODY

CBGA - *** Page 4.11
CBGG - *** Page 4.13
CBCH - *** Page 4.41
CKGB - *** Page 4.17

Instructions for ordering complete cartridge and body assemblies. Page viii
Pressure ratings, material specifications. Page 11.02
SAE Specifications. Page 11.03

Mounting Hole Dimensions	*Ports S & 3*	ALUMINIUM		SG IRON	
		Model Code	*List Price*	*Model Code*	*List Price*
Inch	SAE-6	**HG5**		**HG5/S**	
Metric	.25 BSPP	**HG5/M**		**HG5/T**	

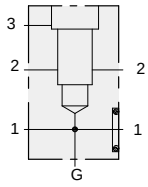

Sandwich mount through flange port 1.25” SAE Code 61 body with gauge port.

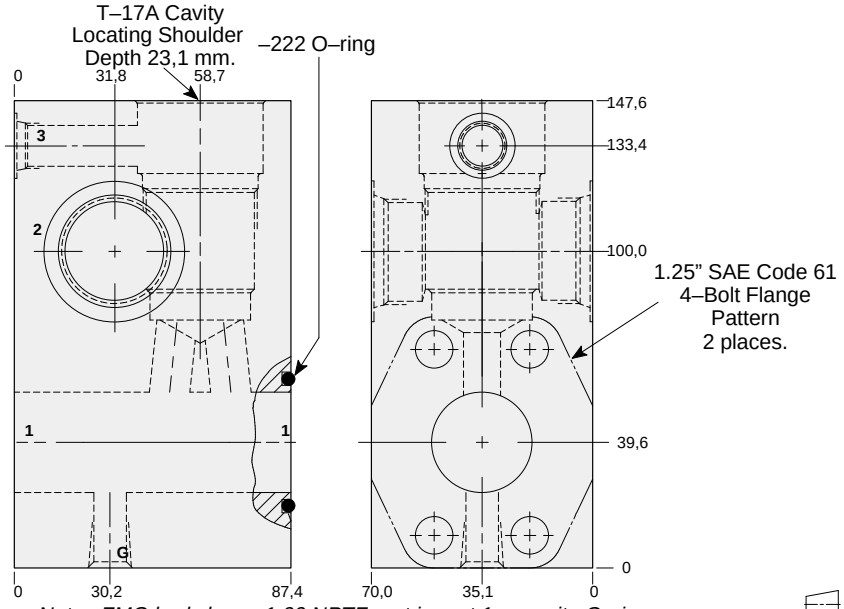

Note: ZMQ body has a 1.00 NPTF port in port 1 opposite O–ring.

TYPICAL CARTRIDGES USED WITH THIS BODY

RVGA - ***	Page	1.19
RSHC - ***	Page	2.07
SQHB - ***	Page	2.09
RSHE - ***	Page	2.11
SCGA - ***	Page	2.13

Cartridge seal type determines O–ring type.

Instructions for ordering complete cartridge and body assemblies. Page viii

Pressure ratings, material specifications. Page 11.02

SAE Specifications. Page 11.03

Mounting Hole Dimensions	*Port 2*	*Port 3*	*Gauge Port*	ALUMINIUM		SG IRON	
				Model Code	*List Price*	*Model Code*	*List Price*
Inch	1.00 NPTF	.25 NPTF	.25 NPTF	**ZMQ**		**ZMQ/S**	
Inch	SAE-16	SAE-6	.25 NPTF	**ZMS**		**ZMS/S**	
Metric	1.00 BSPP	.25 BSPP	.25 BSPP	**ZMT/M**		**ZMT/T**	

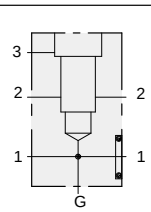

Sandwich mount through flange port 1.25” SAE Code 62 body with gauge port.

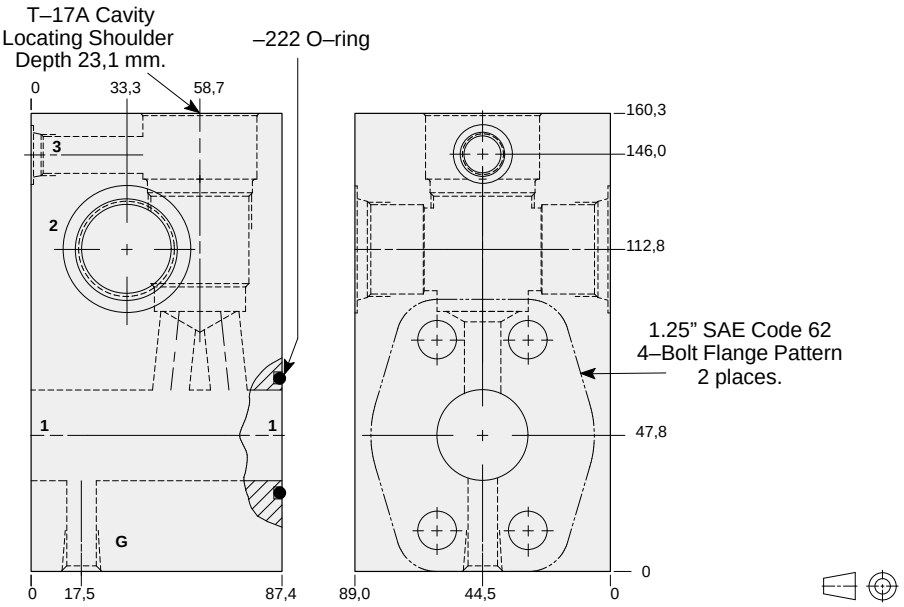

TYPICAL CARTRIDGES USED WITH THIS BODY

RVGA - ***	Page	1.19
RSHC - ***	Page	2.07
SQHB - ***	Page	2.09
RSHE - ***	Page	2.11
SCGA - ***	Page	2.13

Cartridge seal type determines O–ring type.

Instructions for ordering complete cartridge and body assemblies. Page viii

Pressure ratings, material specifications. Page 11.02

SAE Specifications. Page 11.03

Mounting Hole Dimensions	*Port 2*	*Port 3*	*Gauge Port*	ALUMINIUM		SG IRON	
				Model Code	*List Price*	*Model Code*	*List Price*
Inch	1.00 NPTF	.25 NPTF	.25 NPTF	**WXZ**		**WXZ/S**	
Inch	SAE-16	SAE-6	.25 NPTF	**WXY**		**WXY/S**	
Metric	1.00 BSPP	.25 BSPP	.25 BSPP	**WXX/M**		**WXX/T**	

LINE MOUNT BODIES

- Aluminium rated to 210 bar and SG Iron rated to 350 bar.

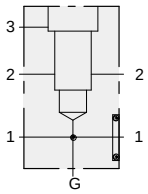

TYPICAL CARTRIDGES USED WITH THIS BODY

RVGA - ***	Page	1.19
RSHC - ***	Page	2.07
SQHB - ***	Page	2.09
RSHE - ***	Page	2.11
SCGA - ***	Page	2.13

Cartridge seal type determines O–ring type.

Instructions for ordering complete cartridge and body assemblies. Page viii

Pressure ratings, material specifications. Page 11.02

SAE Specifications. Page 11.03

Sandwich mount through flange port 1.25” SAE Code 61 body with gauge port.

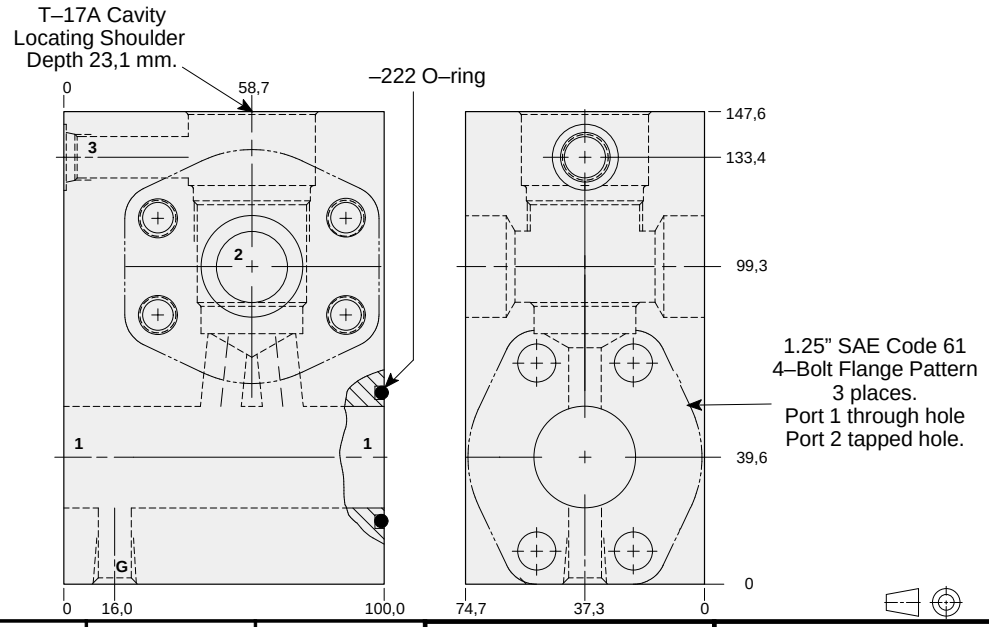

Mounting Hole Dimensions	*Port 3*	*Gauge Port*	ALUMINIUM		SG IRON	
			Model Code	*List Price*	*Model Code*	*List Price*
Inch	SAE-6	.25 NPTF	**ZMV**		**ZMV/S**	
Metric	.25 BSPP	.25 BSPP	**ZMV/M**		**ZMV/T**	

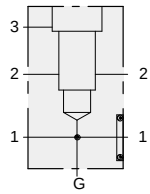

TYPICAL CARTRIDGES USED WITH THIS BODY

RVGA - ***	Page	1.19
RSHC - ***	Page	2.07
SQHB - ***	Page	2.09
RSHE - ***	Page	2.11
SCGA - ***	Page	2.13

Cartridge seal type determines O–ring type.

Instructions for ordering complete cartridge and body assemblies. Page viii

Pressure ratings, material specifications. Page 11.02

SAE Specifications. Page 11.03

Sandwich mount through flange port 1.25” SAE Code 62 body with gauge port.

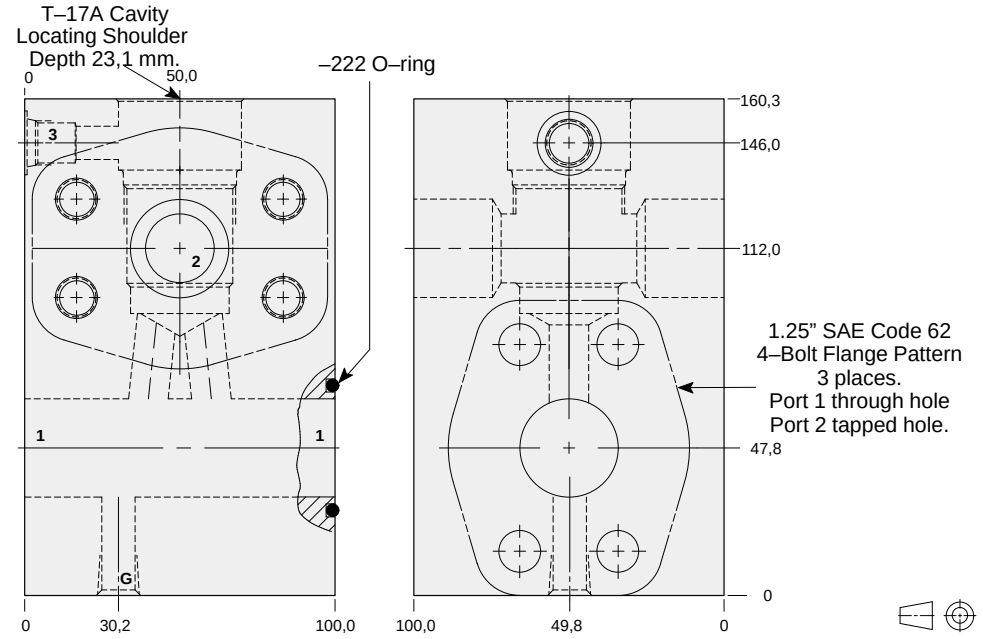

Mounting Hole Dimensions	*Port 3*	*Gauge Port*	ALUMINIUM		SG IRON	
			Model Code	*List Price*	*Model Code*	*List Price*
Inch	SAE-6	.25 NPTF	**WYB**		**WYB/S**	
Metric	.25 BSPP	.25 BSPP	**WYB/M**		**WYB/T**	

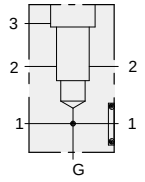

Flange mount through port 1.25” SAE Code 61 body with threaded outlet and gauge port.

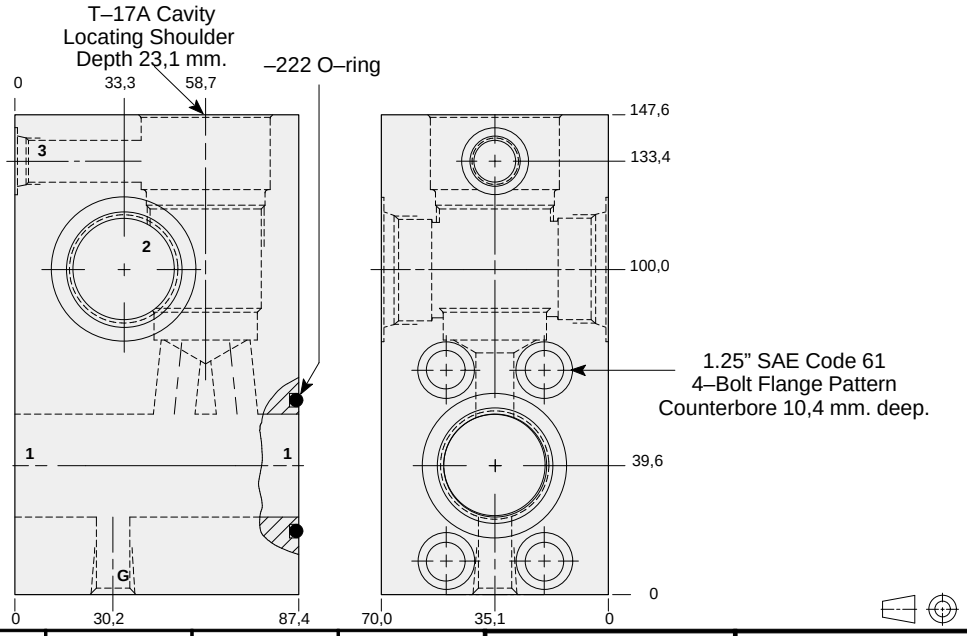

Mounting Hole Dimensions	*Ports 1 & 2*	*Port 3*	*Gauge Port*	ALUMINIUM		SG IRON	
				Model Code	*List Price*	*Model Code*	*List Price*
Inch	1.00 NPTF	.25 NPTF	.25 NPTF	**WYT**		**WYT/S**	
Inch	SAE-16	SAE-6	.25 NPTF	**WYS**		**WYS/S**	
Metric	1.00 BSPP	.25 BSPP	.25 BSPP	**WYR/M**		**WYR/T**	

TYPICAL CARTRIDGES USED WITH THIS BODY

RVGA - ***	Page	1.19
RSHC - ***	Page	2.07
SQHB - ***	Page	2.09
RSHE - ***	Page	2.11
SCGA - ***	Page	2.13

Cartridge seal type determines O–ring type.

Instructions for ordering complete cartridge and body assemblies. Page viii

Pressure ratings, material specifications. Page 11.02

SAE Specifications. Page 11.03

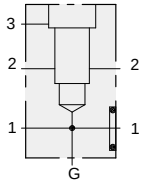

Flange mount through port 1.25” SAE Code 62 body with threaded outlet and gauge port.

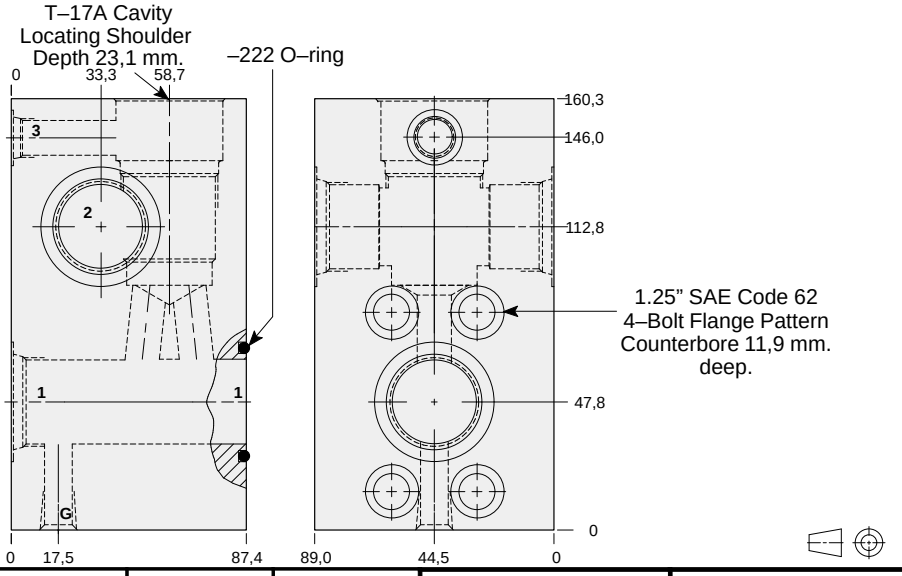

Mounting Hole Dimensions	*Ports 1 & 2*	*Port 3*	*Gauge Port*	ALUMINIUM		SG IRON	
				Model Code	*List Price*	*Model Code*	*List Price*
Inch	1.00 NPTF	.25 NPTF	.25 NPTF	**WXW**		**WXW/S**	
Inch	SAE-16	SAE-6	.25 NPTF	**WXV**		**WXV/S**	
Metric	1.00 BSPP	.25 BSPP	.25 BSPP	**WXU/M**		**WXU/T**	

TYPICAL CARTRIDGES USED WITH THIS BODY

RVGA - ***	Page	1.19
RSHC - ***	Page	2.07
SQHB - ***	Page	2.09
RSHE - ***	Page	2.11
SCGA - ***	Page	2.13

Cartridge seal type determines O–ring type.

Instructions for ordering complete cartridge and body assemblies. Page viii

Pressure ratings, material specifications. Page 11.02

SAE Specifications. Page 11.03

LINE MOUNT BODIES

- Aluminium rated to 210 bar and SG Iron rated to 350 bar.

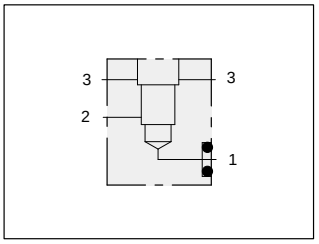

Direct mount .75” SAE Code 61 body with through pilot/drain port.

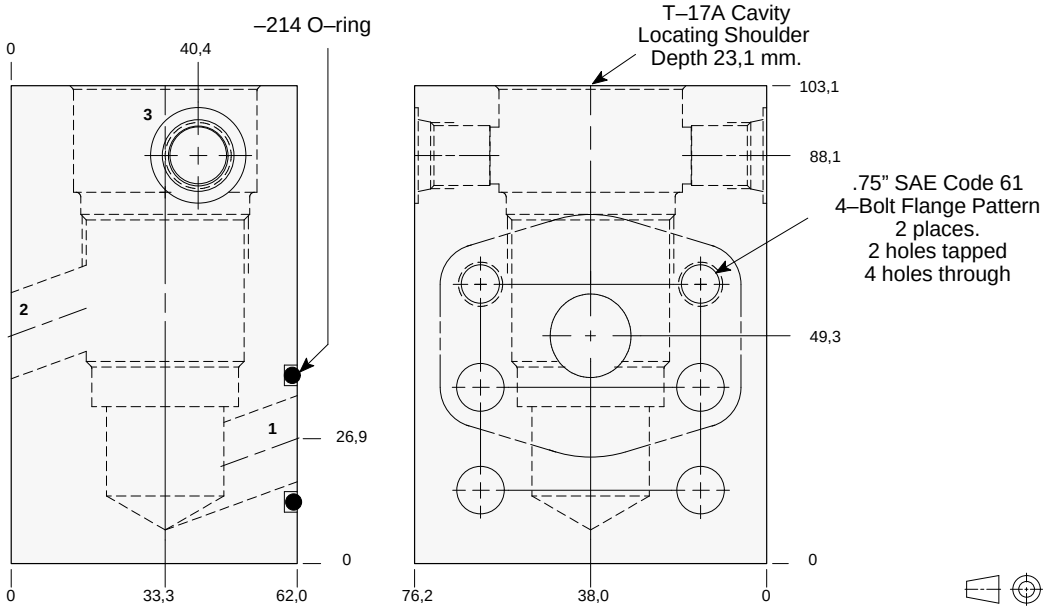

TYPICAL CARTRIDGES USED WITH THIS BODY

RVGA - ***	Page	1.19
RSHC - ***	Page	2.07
SQHB - ***	Page	2.09
RSHE - ***	Page	2.11
SCGA - ***	Page	2.13
CBGA - ***	Page	4.11
CBGG - ***	Page	4.13
CBGH - ***	Page	4.15
CKGB - ***	Page	4.17
LOHC - ***	Page	9.09
LKHC - ***	Page	9.11
LPHC - ***	Page	9.13
LRHC - ***	Page	9.15
COHA - ***	Page	10.13

Cartridge seal type determines O–ring type.

Instructions for ordering complete cartridge and body assemblies. Page viii

Pressure ratings, material specifications. Page 11.02

SAE Specifications. Page 11.03

Mounting Hole Dimensions	*Port 3*	ALUMINIUM		SG IRON	
		Model Code	*List Price*	*Model Code*	*List Price*
Inch	SAE-6	**WGL**		**WGL/S**	
Metric	.25 BSPP	**WGL/M**		**WGL/T**	

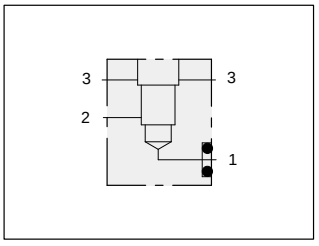

Direct mount .75” SAE Code 62 body with through pilot/drain port.

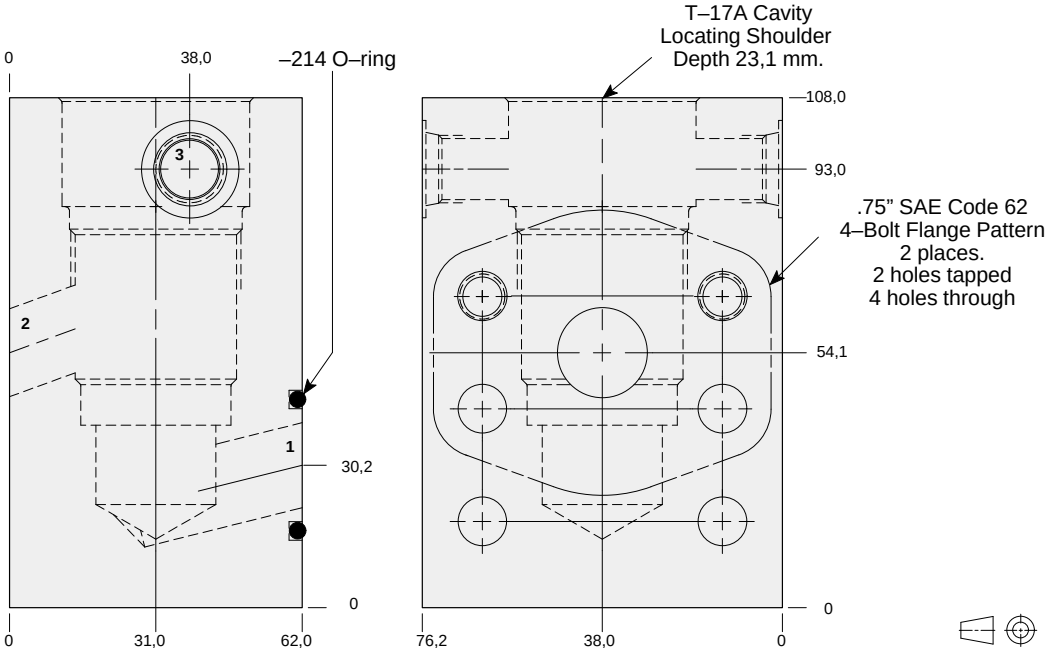

TYPICAL CARTRIDGES USED WITH THIS BODY

RVGA - ***	Page	1.19
RSHC - ***	Page	2.07
SQHB - ***	Page	2.09
RSHE - ***	Page	2.11
SCGA - ***	Page	2.13
CBGA - ***	Page	4.11
CBGG - ***	Page	4.13
CBGH - ***	Page	4.15
CKGB - ***	Page	4.17
LOHC - ***	Page	9.09
LKHC - ***	Page	9.11
LPHC - ***	Page	9.13
LRHC - ***	Page	9.15
COHA - ***	Page	10.13

Cartridge seal type determines O–ring type.

Instructions for ordering complete cartridge and body assemblies. Page viii

Pressure ratings, material specifications. Page 11.02

SAE Specifications. Page 11.03

Mounting Hole Dimensions	*Port 3*	ALUMINIUM		SG IRON	
		Model Code	*List Price*	*Model Code*	*List Price*
Inch	SAE-6	**WNG**		**WNG/S**	
Metric	.25 BSPP	**WNG/M**		**WNG/T**	

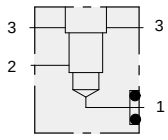

Direct mount 1.00” SAE Code 61 body with through pilot/drain port.

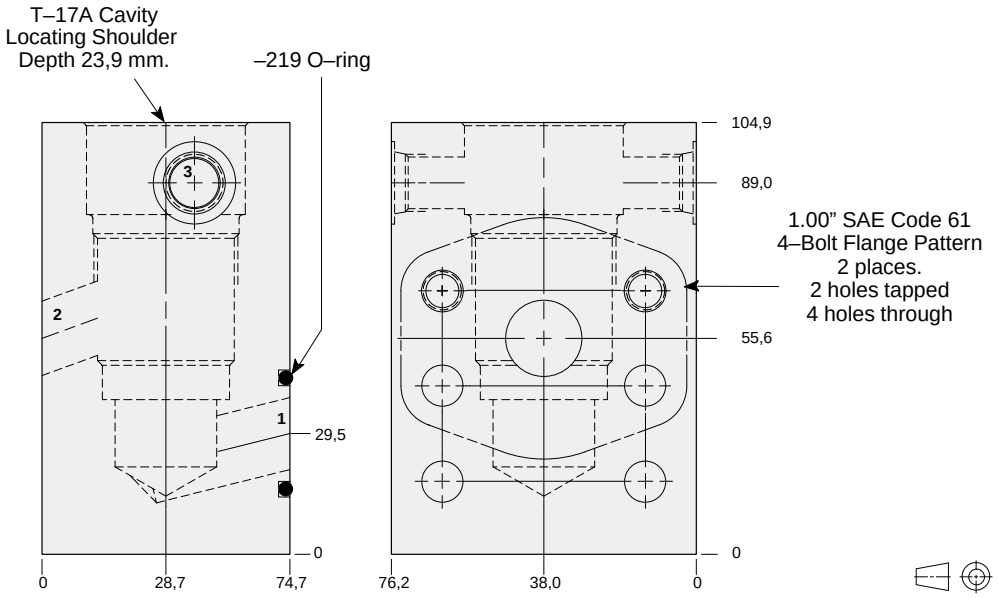

TYPICAL CARTRIDGES USED WITH THIS BODY

RVGA - ***	Page	1.19
RSHC - ***	Page	2.07
SQHB - ***	Page	2.09
RSHE - ***	Page	2.11
SCGA - ***	Page	2.13
CBGA - ***	Page	4.11
CBGG - ***	Page	4.13
CBGH - ***	Page	4.15
CKGB - ***	Page	4.17
LOHC - ***	Page	9.09
LKHC - ***	Page	9.11
LPHC - ***	Page	9.13
LRHC - ***	Page	9.15
COHA - ***	Page	10.13

Cartridge seal type determines O–ring type.

Instructions for ordering complete cartridge and body assemblies. Page viii

Pressure ratings, material specifications. Page 11.02

SAE Specifications. Page 11.03

Mounting Hole Dimensions	*Port 3*	ALUMINIUM		SG IRON	
		Model Code	*List Price*	*Model Code*	*List Price*
Inch	SAE-6	**ZNW**		**ZNW/S**	
Metric	.25 BSPP	**ZNW/M**		**ZNW/T**	

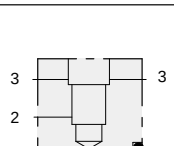

Direct mount 1.00” SAE Code 62 body with through pilot/drain port.

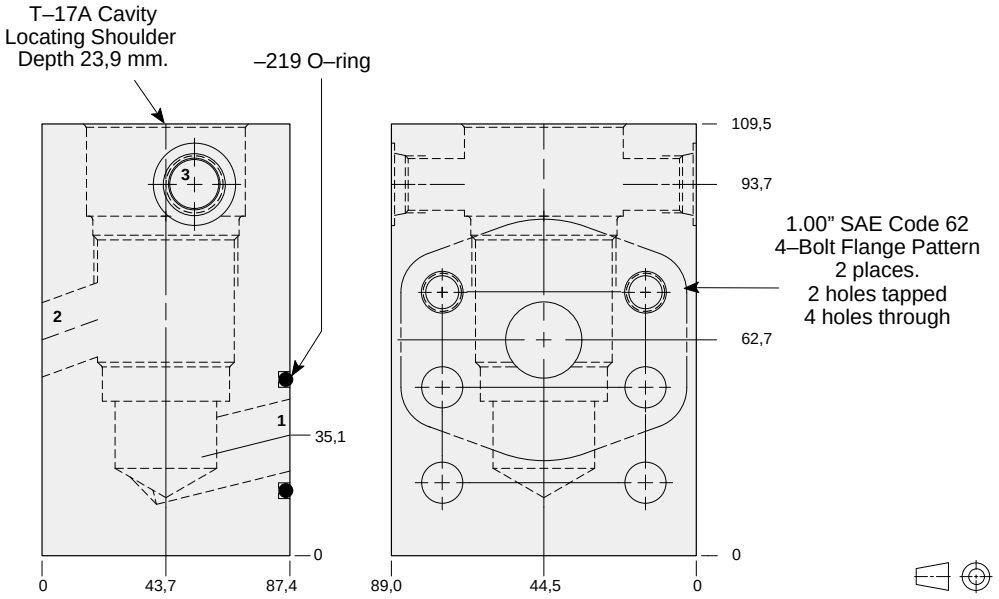

TYPICAL CARTRIDGES USED WITH THIS BODY

RVGA - ***	Page	1.19
RSHC - ***	Page	2.07
SQHB - ***	Page	2.09
RSHE - ***	Page	2.11
SCGA - ***	Page	2.13
CBGA - ***	Page	4.11
CBGG - ***	Page	4.13
CBGH - ***	Page	4.15
CKGB - ***	Page	4.17
LOHC - ***	Page	9.09
LKHC - ***	Page	9.11
LPHC - ***	Page	9.13
LRHC - ***	Page	9.15
COHA - ***	Page	10.13

Cartridge seal type determines O–ring type.

Instructions for ordering complete cartridge and body assemblies. Page viii

Pressure ratings, material specifications. Page 11.02

SAE Specifications. Page 11.03

Mounting Hole Dimensions	*Port 3*	ALUMINIUM		SG IRON	
		Model Code	*List Price*	*Model Code*	*List Price*
Inch	SAE-6	**ZDR**		**ZDR/S**	
Metric	.25 BSPP	**ZDR/M**		**ZDR/T**	

LINE MOUNT BODIES

- Aluminium rated to 210 bar and SG Iron rated to 350 bar.

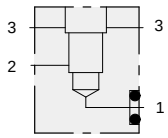

Direct mount 1.25” SAE Code 61 body with through pilot/drain port.

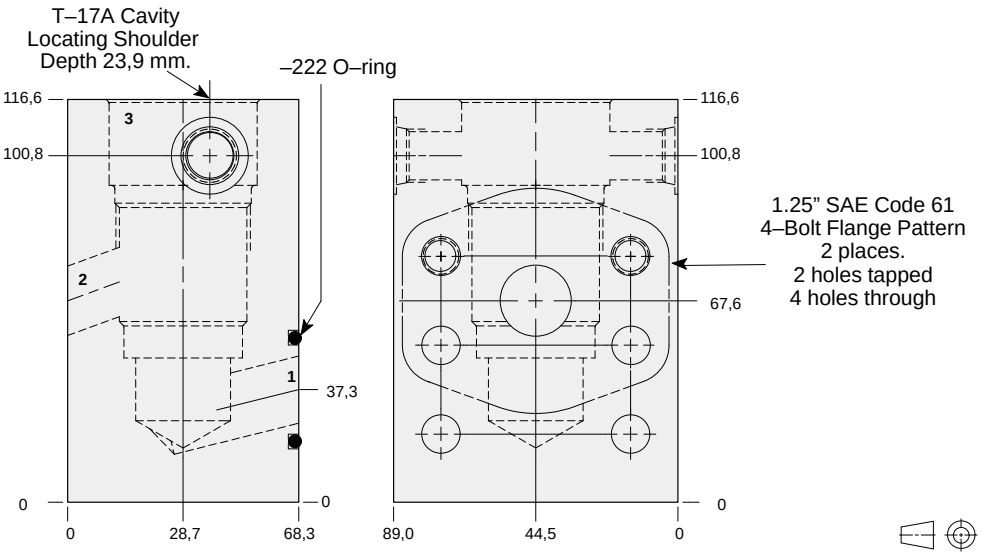

TYPICAL CARTRIDGES USED WITH THIS BODY

RVGA - ***	Page	1.19
RSHC - ***	Page	2.07
SQHB - ***	Page	2.09
RSHE - ***	Page	2.11
SCGA - ***	Page	2.13
CBGA - ***	Page	4.11
CBGG - ***	Page	4.13
CBGH - ***	Page	4.15
CKGB - ***	Page	4.17
LOHC - ***	Page	9.09
LKHC - ***	Page	9.11
LPHC - ***	Page	9.13
LRHC - ***	Page	9.15
COHA - ***	Page	10.13

Cartridge seal type determines O–ring type.

Instructions for ordering complete cartridge and body assemblies. Page viii

Pressure ratings, material specifications. Page 11.02

SAE Specifications. Page 11.03

Mounting Hole Dimensions	*Port 3*	ALUMINIUM		SG IRON	
		Model Code	*List Price*	*Model Code*	*List Price*
Inch	SAE-6	**ZJY**		**ZJY/S**	
Metric	.25 BSPP	**ZJY/M**		**ZJY/T**	

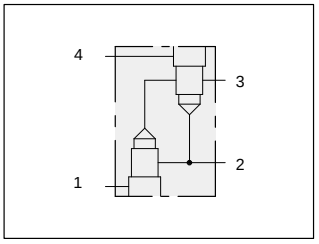

Two cavity body for flow control applications.

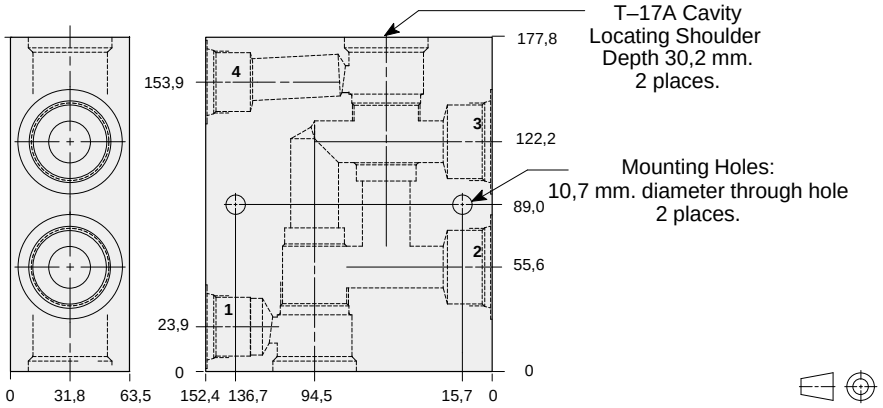

TYPICAL CARTRIDGES USED WITH THIS BODY

FREA - ***	Page	6.03

Instructions for ordering complete cartridge and body assemblies. Page viii

Pressure ratings, material specifications. Page 11.02

Ports 1 & 2	*Port 2 & 3*	ALUMINIUM		SG IRON	
		Model Code	*List Price*	*Model Code*	*List Price*
.75 NPTF	.75 NPTF	**VXB**		**VXB/S**	
1.00 NPTF	1.00 NPTF	**VXC**		**VXC/S**	
1.00 NPTF	1.25 NPTF	**VXD**		**VXD/S**	
SAE-12	SAE-12	**VXF**		**VXF/S**	
SAE-16	SAE-16	**VXG**		**VXG/S**	
SAE-16	SAE-20	**VXH**		**VXH/S**	
.75 BSPP	.75 BSPP	**VXJ**		**VXJ/S**	
1.00 BSPP	1.00 BSPP	**VXK**		**VXK/S**	
1.00 BSPP	1.25 BSPP	**VXL**		**VXL/S**	

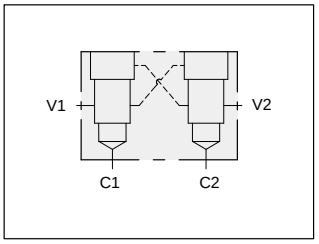

Two cavity 90 degree cross–piloted body for load control applications.

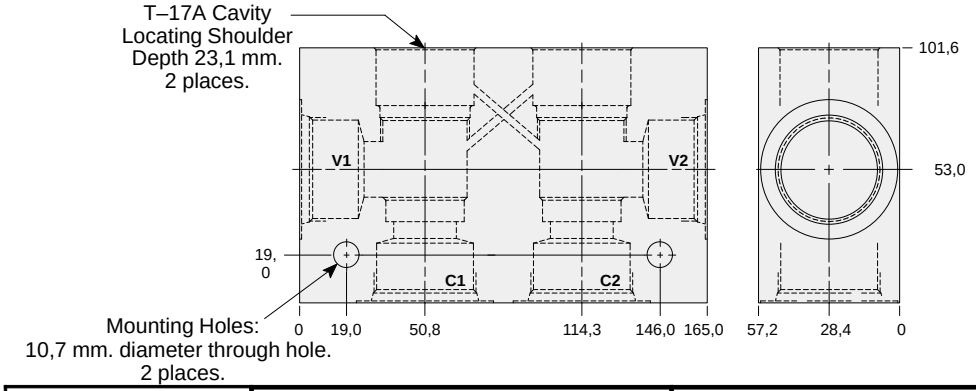

TYPICAL CARTRIDGES USED WITH THIS BODY

CBGA - *** Page 4.11
CBGG - *** Page 4.13
CBGH - *** Page 4.15
CKGB - *** Page 4.17

Instructions for ordering complete cartridge and body assemblies. Page viii

Pressure ratings, material specifications. Page 11.02

Ports C1, C2, & V1, V2	ALUMINIUM		SG IRON	
	Model Code	*List Price*	*Model Code*	*List Price*
.75 NPTF	**YJD**		**YJD/S**	
1.00 NPTF	**YJE**		**YJE/S**	
1.25 NPTF	**YJF**		**YJF/S**	
SAE-12	**YJL**		**YJL/S**	
SAE-16	**YJM**		**YJM/S**	
SAE-20	**YJN**		**YJN/S**	
.75 BSPP	**YJW**		**YJW/S**	
1.00 BSPP	**YJX**		**YJX/S**	
1.25 BSPP	**YJY**		**YJY/S**	

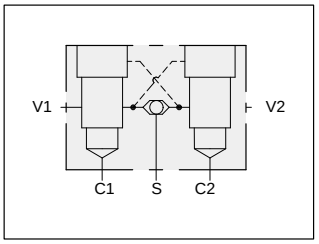

Two cavity 90 degree cross–piloted body with shuttle for load control applications.

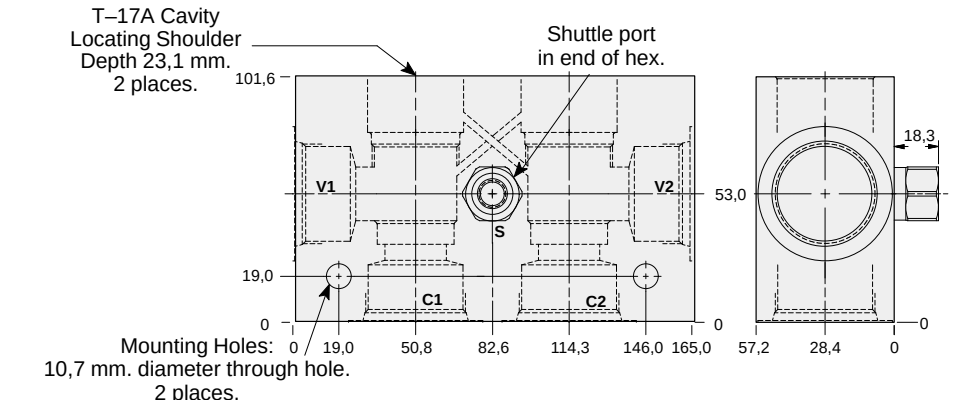

TYPICAL CARTRIDGES USED WITH THIS BODY

CBGA - *** Page 4.11
CBGG - *** Page 4.13
CBGH - *** Page 4.15
CKGB - *** Page 4.17

Cartridge seal type determines shuttle valve seal type.

Instructions for ordering complete cartridge and body assemblies. Page viii

Pressure ratings, material specifications. Page 11.02

Ports C1, C2, & V1, V2	*Shuttle Cartridge*	*Port S*	ALUMINIUM		SG IRON	
			Model Code	*List Price*	*Model Code*	*List Price*
.75 NPTF	CSAA – EXN	SAE-4	**YKD**		**YKD/S**	
1.00 NPTF	CSAA – EXN	SAE-4	**YKE**		**YKE/S**	
1.25 NPTF	CSAA – EXN	SAE-4	**YKF**		**YKF/S**	
SAE-12	CSAA – EXN	SAE-4	**YKL**		**YKL/S**	
SAE-16	CSAA – EXN	SAE-4	**YKM**		**YKM/S**	
SAE-20	CSAA – EXN	SAE-4	**YKN**		**YKN/S**	
.75 BSPP	CSAA – BXN	.25 BSPP	**YKW**		**YKW/S**	
1.00 BSPP	CSAA – BXN	.25 BSPP	**YKX**		**YKX/S**	
1.25 BSPP	CSAA – BXN	.25 BSPP	**YKY**		**YKY/S**	

LINE MOUNT BODIES

- Aluminium rated to 210 bar and SG Iron rated to 350 bar.

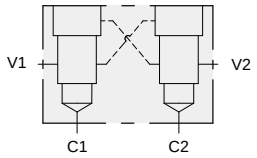

Two cavity cross–piloted 1.00” SAE Code 61 body for load control applications.

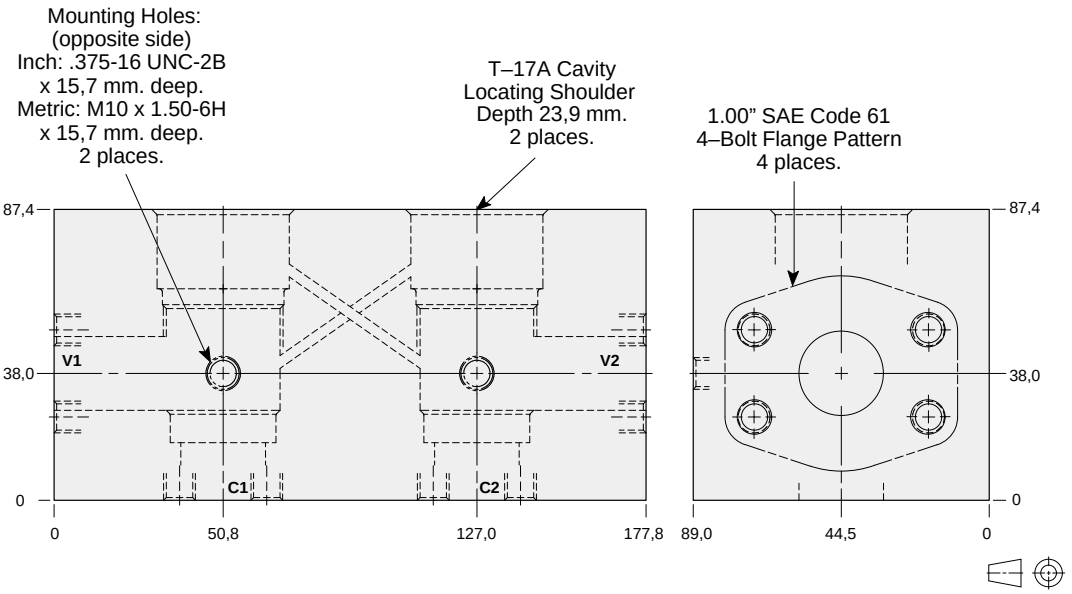

TYPICAL CARTRIDGES USED WITH THIS BODY

CBGA - ***	Page	4.11
CBGG - ***	Page	4.13
CBGH - ***	Page	4.15
CKGB - ***	Page	4.17
Instructions for ordering complete cartridge and body assemblies.	Page	viii
Pressure ratings, material specifications.	Page	11.02
SAE Specifications.	Page	11.03

Mounting Hole Dimensions	ALUMINIUM		SG IRON	
	Model Code	*List Price*	*Model Code*	*List Price*
Inch	**YJP**		**YJP/S**	
Metric	**YJP/M**		**YJP/T**	

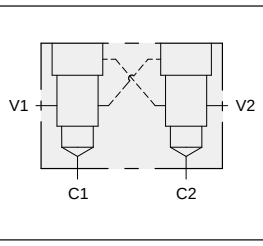

Two cavity cross–piloted 1.25” SAE Code 61 body for load control applications.

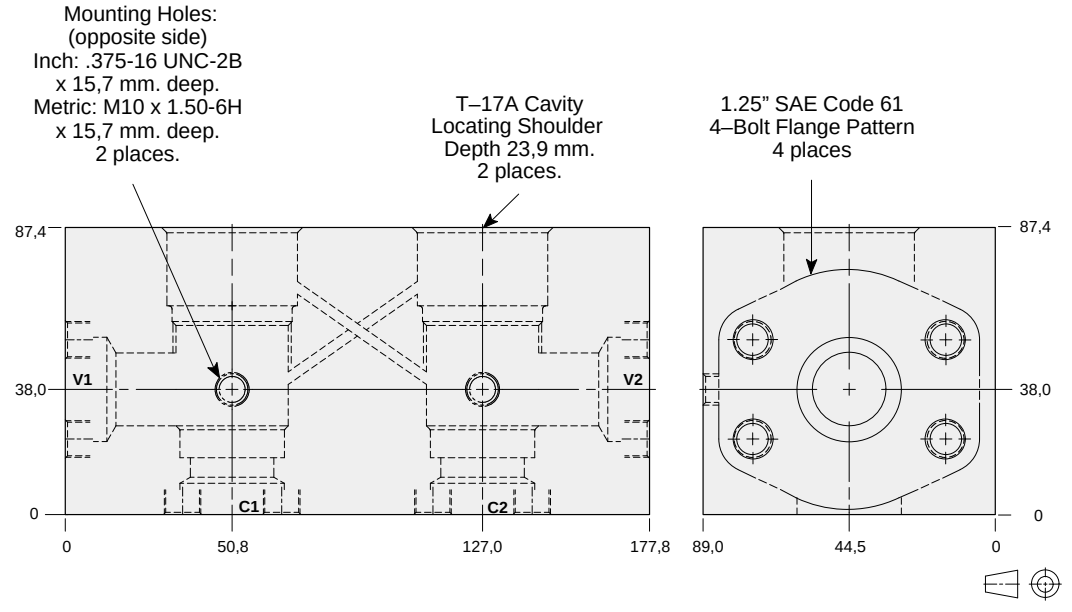

TYPICAL CARTRIDGES USED WITH THIS BODY

CBGA - ***	Page	4.11
CBGG - ***	Page	4.13
CBGH - ***	Page	4.15
CKGB - ***	Page	4.17
Instructions for ordering complete cartridge and body assemblies.	Page	viii
Pressure ratings, material specifications.	Page	11.02
SAE Specifications.	Page	11.03

Mounting Hole Dimensions	ALUMINIUM		SG IRON	
	Model Code	*List Price*	*Model Code*	*List Price*
Inch	**YJQ**		**YJQS**	
Metric	**YJQ/M**		**YJQ/T**	

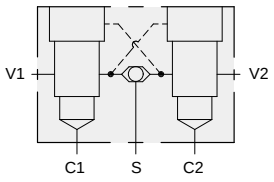

Two cavity cross–piloted 1.00” SAE Code 61 body with shuttle for load control applications.

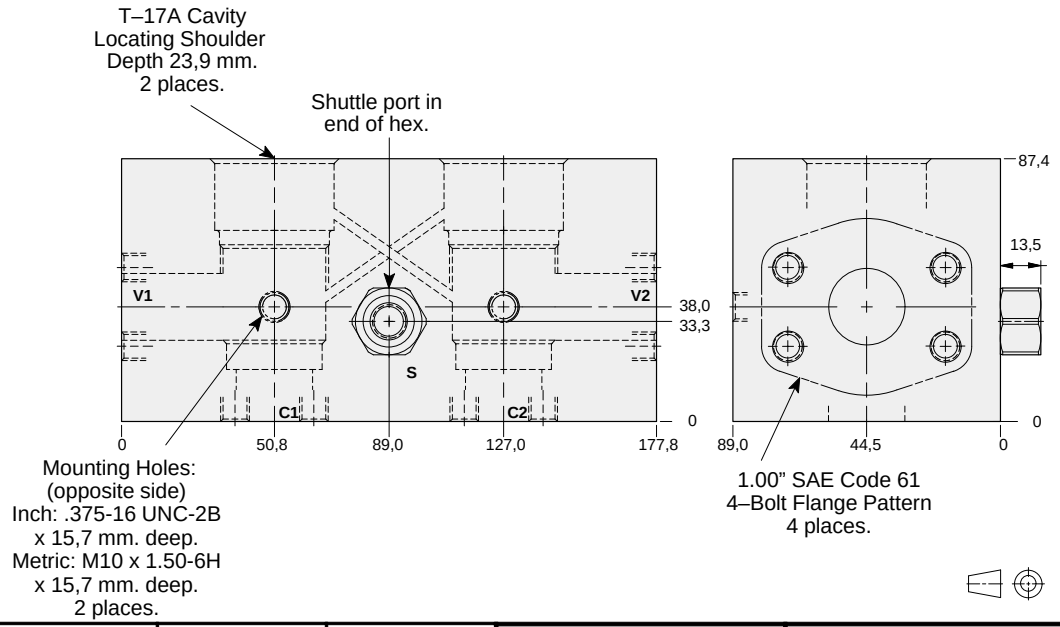

TYPICAL CARTRIDGES USED WITH THIS BODY

CBGA - ***	Page	4.11
CBGG - ***	Page	4.13
CBGH - ***	Page	4.15
CKGB - ***	Page	4.17

Cartridge seal type determines check valve seal type.

Instructions for ordering complete cartridge and body assemblies. Page viii

Pressure ratings, material specifications. Page 11.02

SAE Specifications. Page 11.03

Mounting Hole Dimensions	*Shuttle Cartridge*	*Port 3*	ALUMINIUM		SG IRON	
			Model Code	*List Price*	*Model Code*	*List Price*
Inch	CSAA – EXN	SAE-6	**YKP**		**YKP/S**	
Metric	CSAA – BXN	.25 BSPP	**YKP/M**		**YKP/T**	

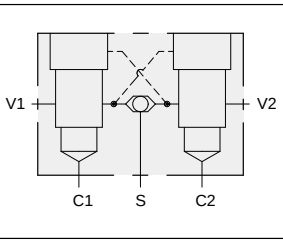

Two cavity cross–piloted 1.25” SAE Code 61 body with shuttle for load control applications.

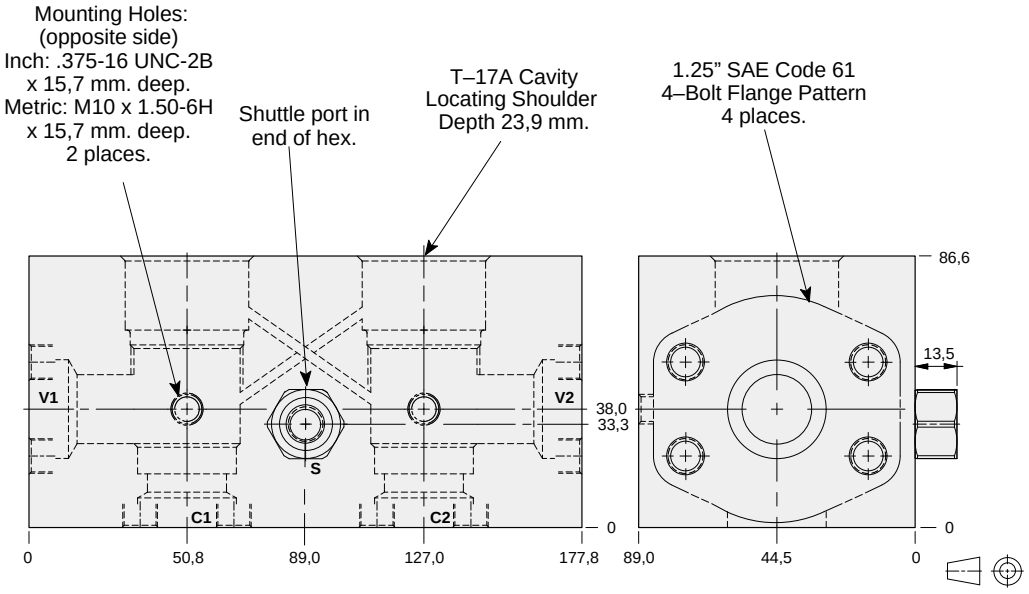

TYPICAL CARTRIDGES USED WITH THIS BODY

CBGA - ***	Page	4.11
CBGG - ***	Page	4.13
CBGH - ***	Page	4.15
CKGB - ***	Page	4.17

Cartridge seal type determines check valve seal type.

Instructions for ordering complete cartridge and body assemblies. Page viii

Pressure ratings, material specifications. Page 11.02

SAE Specifications. Page 11.03

Mounting Hole Dimensions	*Shuttle Cartridge*	*Port 3*	ALUMINIUM		SG IRON	
			Model Code	*List Price*	*Model Code*	*List Price*
Inch	CSAA – EXN	SAE-6	**YKQ**		**YKQ/S**	
Metric	CSAA – BXN	.25 BSPP	**YKQ/M**		**YKQ/T**	

LINE MOUNT BODIES

- Aluminium rated to 210 bar and SG Iron rated to 350 bar.

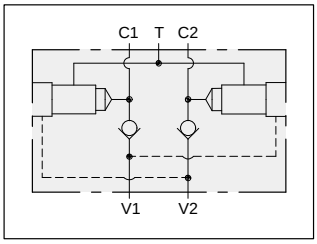

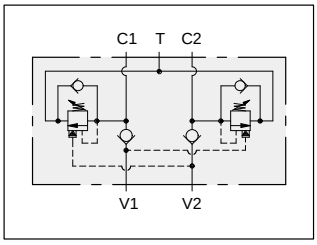

TYPICAL CARTRIDGES USED WITH THIS BODY

CBGA - *** Page 4.11
CBGG - *** Page 4.13
CBGH - *** Page 4.15

Cartridge seal type determines check valve seal type.

Instructions for ordering complete cartridge and body assemblies. Page viii

Pressure ratings, material specifications. Page 11.02

Two cavity dual load control body with checks.

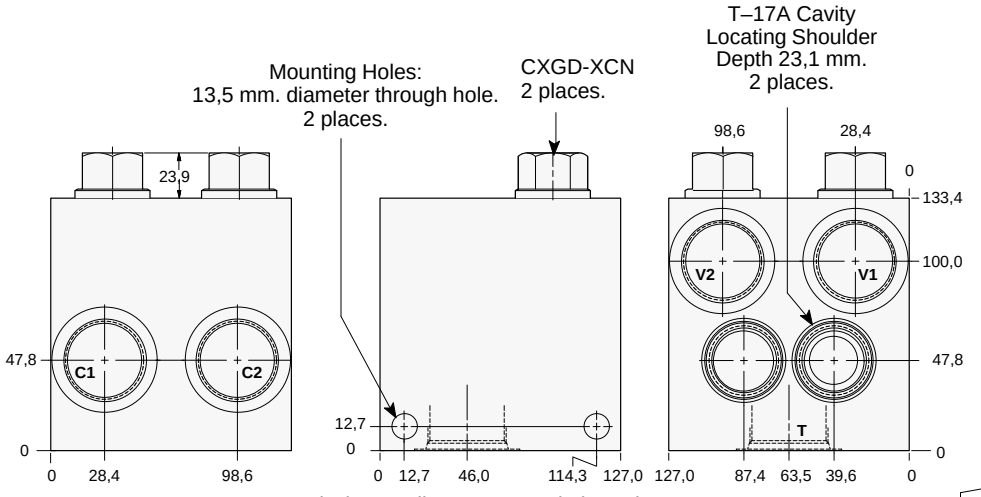

Discharge oil returns to tank through port T.

Ports C1, C2, & V1, V2	*Port T*	ALUMINIUM		SG IRON	
		Model Code	*List Price*	*Model Code*	*List Price*
1.00 NPTF	1.25 NPTF	**HME**		**HME/S**	
1.25 NPTF	1.25 NPTF	**HMF**		**HMF/S**	
SAE-16	SAE-20	**HMM**		**HMM/S**	
SAE-20	SAE-20	**HMN**		**HMN/S**	
1.00 BSPP	1.25 BSPP	**HMX**		**HMX/S**	
1.25 BSPP	1.25 BSPP	**HMY**		**HMY/S**	

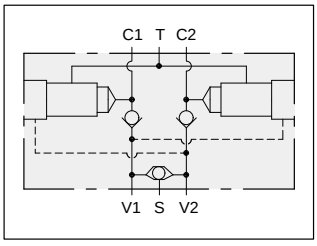

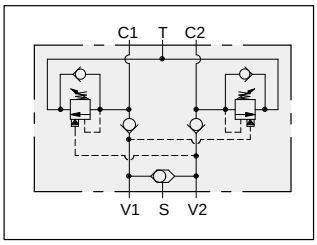

TYPICAL CARTRIDGES USED WITH THIS BODY

CBGA - *** Page 4.11
CBGG - *** Page 4.13
CBGH - *** Page 4.15

Cartridge seal type determines check valve seal type.

Instructions for ordering complete cartridge and body assemblies. Page viii

Pressure ratings, material specifications. Page 11.02

Two cavity dual load control body with checks and shuttle.

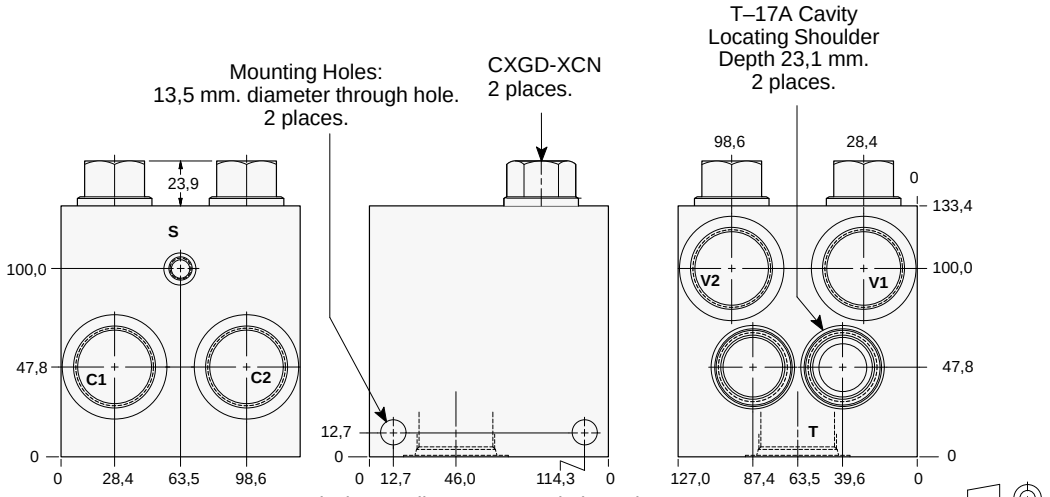

Discharge oil returns to tank through port T.

Ports C1, C2, & V1, V2	*Port S*	*Port T*	ALUMINIUM		SG IRON	
			Model Code	*List Price*	*Model Code*	*List Price*
1.00 NPTF	.25 NPTF	1.25 NPTF	**HNE**		**HNE/S**	
1.25 NPTF	.25 NPTF	1.25 NPTF	**HNF**		**HNF/S**	
SAE-16	SAE-4	SAE-20	**HNM**		**HNM/S**	
SAE-20	SAE-4	SAE-20	**HNN**		**HNN/S**	
1.00 BSPP	.25 BSPP	1.25 BSPP	**HNX**		**HNX/S**	
1.25 BSPP	.25 BSPP	1.25 BSPP	**HNY**		**HNY/S**	

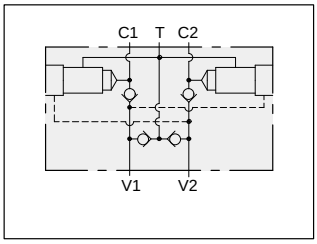

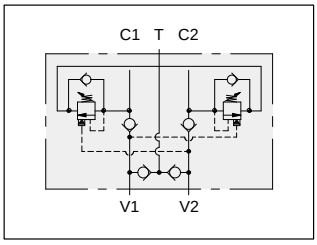

Two cavity dual load control body with make–up checks.

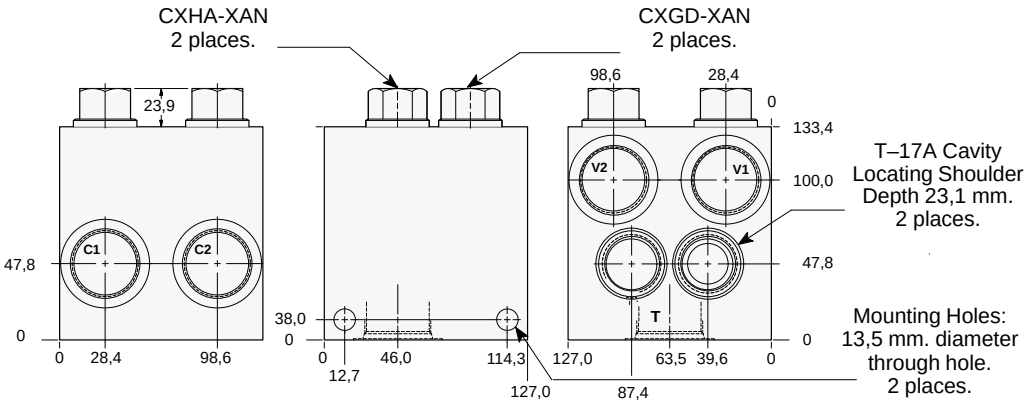

Discharge oil returns to tank through directional valve or port T.

TYPICAL CARTRIDGES USED WITH THIS BODY

CBGA - *** Page 4.11
CBGG - *** Page 4.13
CBGH - *** Page 4.15

Cartridge seal type determines check valve seal type.

Instructions for ordering complete cartridge and body assemblies. Page viii

Pressure ratings, material specifications. Page 11.02

SAE Specifications. Page 11.03

Ports C1, C2, & V1, V2	*Port T*	ALUMINIUM		SG IRON	
		Model Code	*List Price*	*Model Code*	*List Price*
1.00 NPTF	1.25 NPTF	**HPE**		**HPE/S**	
1.25 NPTF	1.25 NPTF	**HPF**		**HPF/S**	
SAE-16	SAE-20	**HPM**		**HPM/S**	
SAE-20	SAE-20	**HPN**		**HPN/S**	
1.00 BSPP	1.25 BSPP	**HPX**		**HPX/S**	
1.25 BSPP	1.25 BSPP	**HPY**		**HPY/S**	

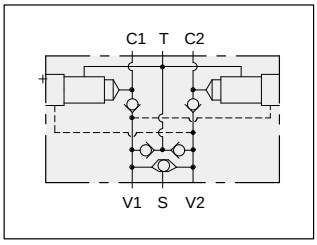

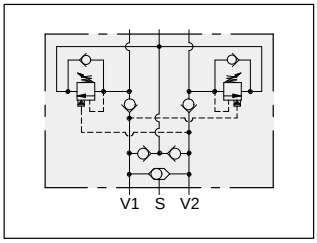

Two cavity dual load control body with make–up checks and shuttle.

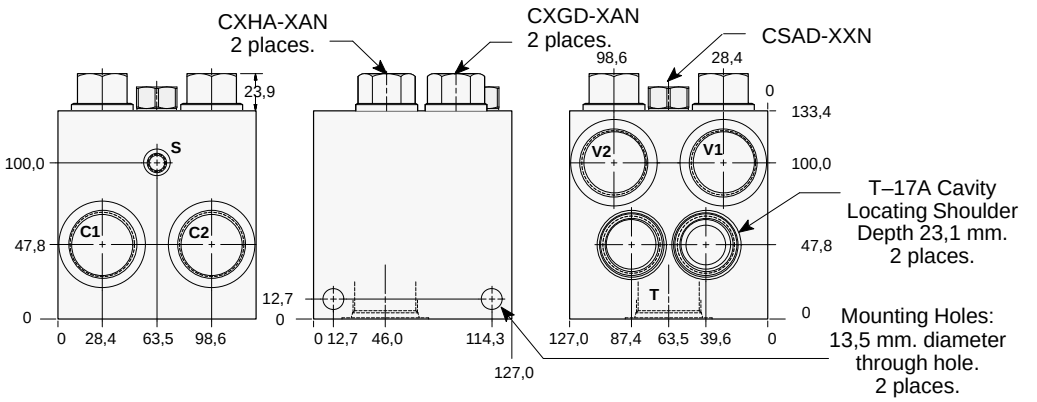

Discharge oil returns to tank through directional valve or port T.

TYPICAL CARTRIDGES USED WITH THIS BODY

CBGA - *** Page 4.11
CBGG - *** Page 4.13
CBGH - *** Page 4.15

Cartridge seal type determines check valve seal type.

Instructions for ordering complete cartridge and body assemblies. Page viii

Pressure ratings, material specifications. Page 11.02

SAE Specifications. Page 11.03

Ports C1, C2, & V1, V2	*Port S*	*Port T*	ALUMINIUM		SG IRON	
			Model Code	*List Price*	*Model Code*	*List Price*
1.00 NPTF	.25 NPTF	1.25 NPTF	**HQE**		**HQE/S**	
1.25 NPTF	.25 NPTF	1.25 NPTF	**HQF**		**HQF/S**	
SAE-16	SAE-4	SAE-20	**HQM**		**HQM/S**	
SAE-20	SAE-4	SAE-20	**HQN**		**HQN/S**	
1.00 BSPP	.25 BSPP	1.25 BSPP	**HQX**		**HQX/S**	
1.25 BSPP	.25 BSPP	1.25 BSPP	**HQY**		**HQY/S**	

LINE MOUNT BODIES

- Aluminium rated to 210 bar and SG Iron rated to 350 bar.

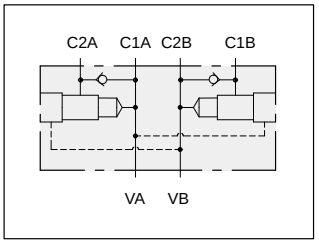

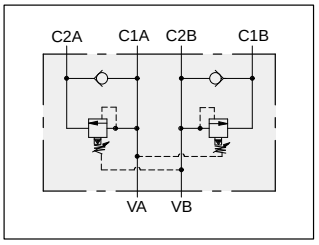

Two cavity dual sequence body with reverse free flow checks.

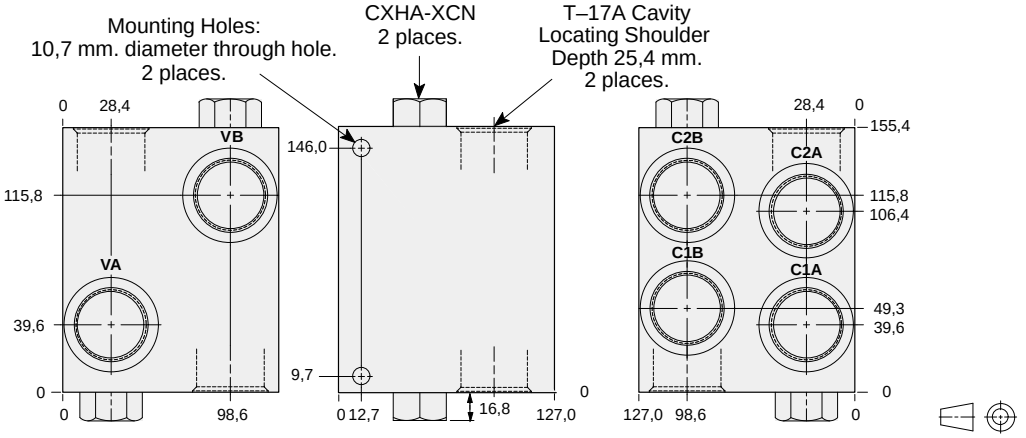

TYPICAL CARTRIDGES USED WITH THIS BODY

RSHC - *** Page 2.07
SQHB - *** Page 2.09

Instructions for ordering complete cartridge and body assemblies. Page viii

Pressure ratings, material specifications. Page 11.02

All Ports	ALUMINIUM		SG IRON	
	Model Code	*List Price*	*Model Code*	*List Price*
.75 NPTF	**H8D**		**H8D/S**	
1.00 NPTF	**H8E**		**H8E/S**	
1.25 NPTF	**H8F**		**H8F/S**	
SAE-12	**H8L**		**H8L/S**	
SAE-16	**H8M**		**H8M/S**	
SAE-20	**H8N**		**H8N/S**	
.75 BSPP	**H8W**		**H8W/S**	
1.00 BSPP	**H8X**		**H8X/S**	
1.25 BSPP	**H8Y**		**H8Y/S**	

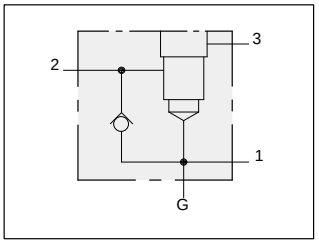

TYPICAL CARTRIDGES USED WITH THIS BODY

RSHC - ***	Page	2.07
SQHB - ***	Page	2.09
RSHE - ***	Page	2.11

Cartridge seal type determines check valve seal type.

Instructions for ordering complete cartridge and body assemblies. Page viii

Pressure ratings, material specifications. Page 11.02

1.00” SAE Code 62 flange port body with reverse free flow check and gauge port for sequence applications.

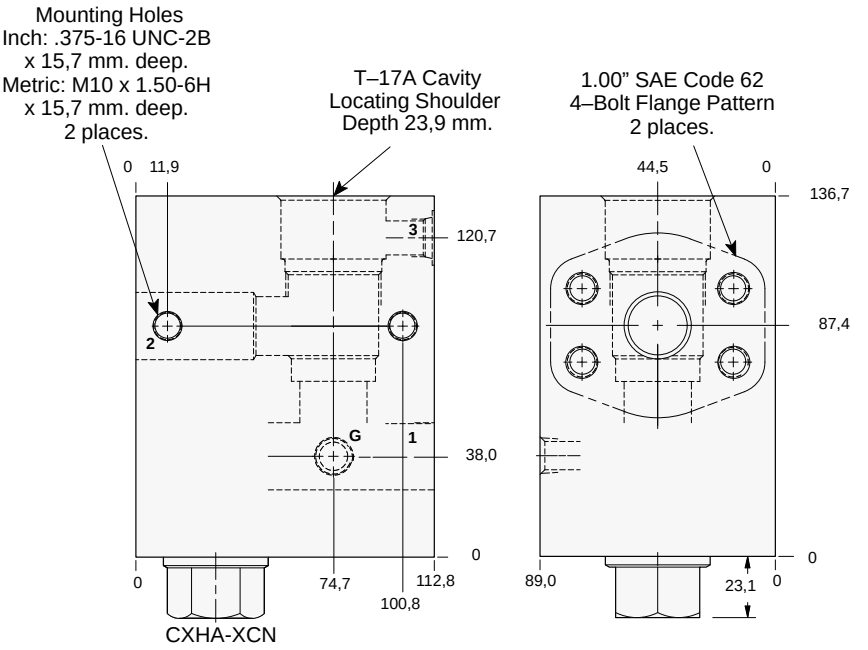

Mounting Hole Dimensions	*Port 3*	*Gauge Port*	ALUMINIUM		SG IRON	
			Model Code	*List Price*	*Model Code*	*List Price*
Inch	SAE-6	.25 NPTF	**H64**		**H64/S**	
Metric	.25 BSPP	.25 BSPP	**H64/M**		**H64/T**	

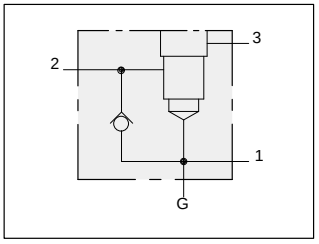

TYPICAL CARTRIDGES USED WITH THIS BODY

RSHC - ***	Page	2.07
SQHB - ***	Page	2.09
RSHE - ***	Page	2.11

Cartridge seal type determines check valve seal type.

Instructions for ordering complete cartridge and body assemblies. Page viii

Pressure ratings, material specifications. Page 11.02

1.25” SAE Code 62 flange port body with reverse free flow check and gauge port for sequence applications.

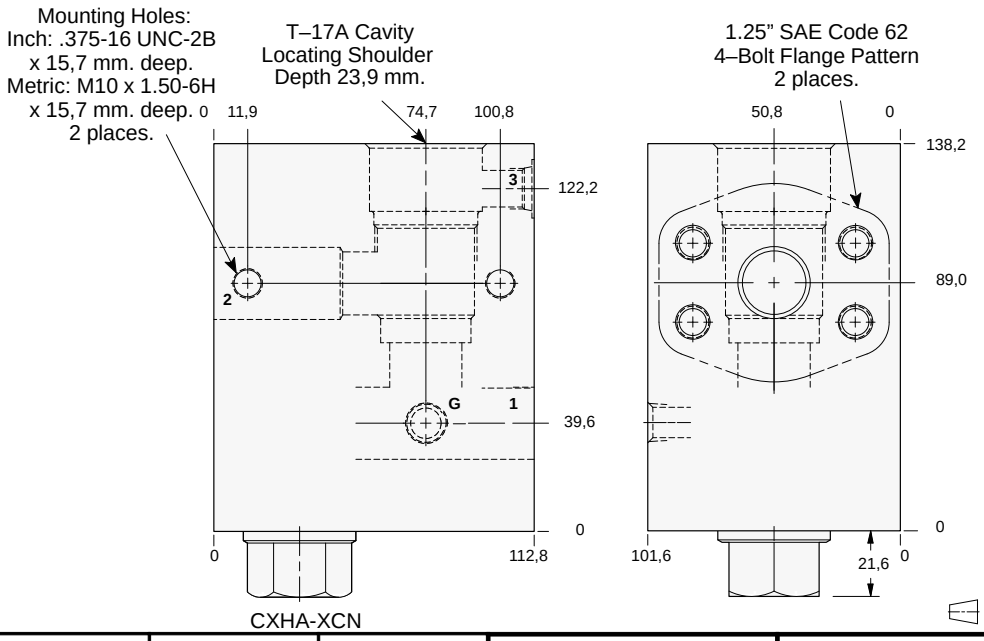

Mounting Hole Dimensions	*Port 3*	*Gauge Port*	ALUMINIUM		SG IRON	
			Model Code	*List Price*	*Model Code*	*List Price*
Inch	SAE-6	.25 NPTF	**H65**		**H65/S**	
Metric	.25 BSPP	.25 BSPP	**H65/M**		**H65/T**	

LINE MOUNT BODIES

- Aluminium rated to 210 bar and SG Iron rated to 350 bar.

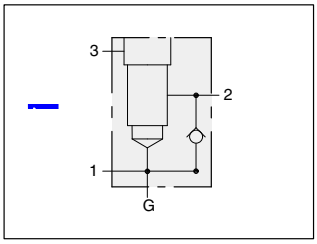

TYPICAL CARTRIDGES USED WITH THIS BODY

RSHC - ***	Page	2.07
SQHB - ***	Page	2.09
RSHE - ***	Page	2.11

Cartridge seal type determines check valve seal type.

Instructions for ordering complete cartridge and body assemblies. Page viii

Pressure ratings, material specifications. Page 11.02

Body with reverse free flow check and gauge port for sequence applications.

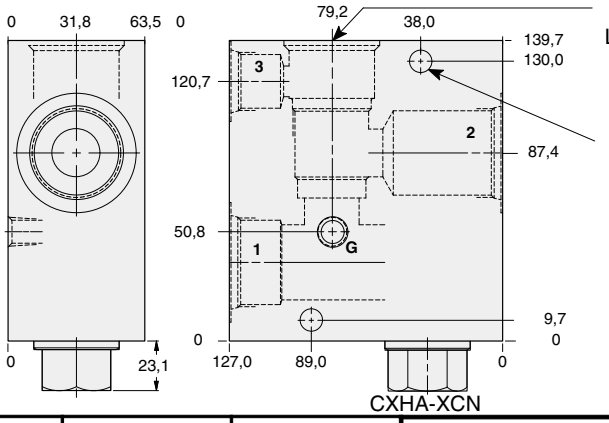

Ports 1 & 2	Port 3	Gauge Port	ALUMINIUM		SG IRON	
			Model Code	List Price	Model Code	List Price
.75 NPTF	.25 NPTF	.25 NPTF	**H6D**		**H6D/S**	
1.00 NPTF	.25 NPTF	.25 NPTF	**H6E**		**H6E/S**	
1.25 NPTF	.25 NPTF	.25 NPTF	**H6F**		**H6F/S**	
SAE-12	SAE-6	.25 NPTF	**H6L**		**H6L/S**	
SAE-16	SAE-6	.25 NPTF	**H6M**		**H6M/S**	
SAE-20	SAE-6	.25 NPTF	**H6N**		**H6N/S**	
.75 BSPP	.25 BSPP	.25 BSPP	**H6W**		**H6W/S**	
1.00 BSPP	.25 BSPP	.25 BSPP	**H6X**		**H6X/S**	
1.25 BSPP	.25 BSPP	.25 BSPP	**H6Y**		**H6Y/S**	

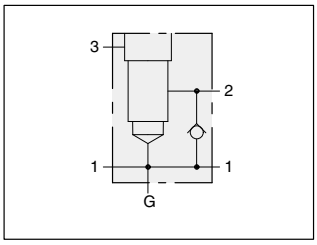

TYPICAL CARTRIDGES USED WITH THIS BODY

RSHC - ***	Page	2.07
SQHB - ***	Page	2.09
RSHE - ***	Page	2.11

Cartridge seal type determines check valve seal type.

Instructions for ordering complete cartridge and body assemblies. Page viii

Pressure ratings, material specifications. Page 11.02

Through port body with reverse free flow check and gauge port for sequence applications.

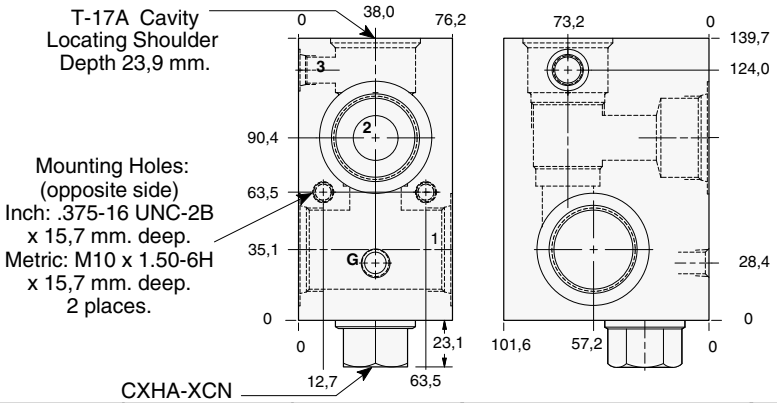

Ports 1 & 2	Port 3	Gauge Port	ALUMINIUM		SG IRON	
			Model Code	List Price	Model Code	List Price
.75 NPTF	.25 NPTF	.25 NPTF	**H7D**		**H7D/S**	
1.00 NPTF	.25 NPTF	.25 NPTF	**H7E**		**H7E/S**	
1.25 NPTF	.25 NPTF	.25 NPTF	**H7F**		**H7F/S**	
SAE-12	SAE-6	.25 NPTF	**H7L**		**H7L/S**	
SAE-16	SAE-6	.25 NPTF	**H7M**		**H7M/S**	
SAE-20	SAE-6	.25 NPTF	**H7N**		**H7N/S**	
.75 BSPP	.25 BSPP	.25 BSPP	**H7W**		**H7W/S**	
1.00 BSPP	.25 BSPP	.25 BSPP	**H7X**		**H7X/S**	
1.25 BSPP	.25 BSPP	.25 BSPP	**H7Y**		**H7Y/S**	

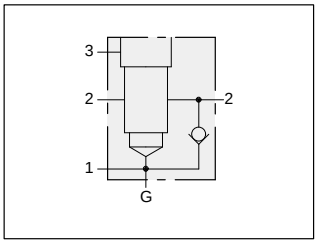

Through port body with reverse free flow check and gauge port for reducing applications.

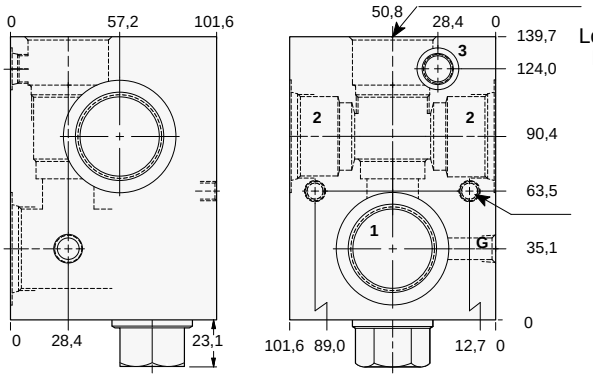

T–17A Cavity Locating Shoulder Depth 23,9 mm.

Mounting Holes: (opposite side) Inch: .375-16 UNC-2B x 15,7 mm. deep. Metric: M10 x 1.50-6H x 15,7 mm. deep. 2 places.

CXGD-XCN

TYPICAL CARTRIDGES USED WITH THIS BODY

PBHB - *** Page 3.07
PBHC - *** Page 3.09

Cartridge seal type determines check valve seal type.

Instructions for ordering complete cartridge and body assemblies. Page viii

Pressure ratings, material specifications. Page 11.02

Ports 1 & 2	*Port 3*	*Gauge Port*	ALUMINIUM		SG IRON	
			Model Code	*List Price*	*Model Code*	*List Price*
.75 NPTF	.25 NPTF	.25 NPTF	**H3D**		**H3D/S**	
1.00 NPTF	.25 NPTF	.25 NPTF	**H3E**		**H3E/S**	
1.25 NPTF	.25 NPTF	.25 NPTF	**H3F**		**H3F/S**	
SAE-12	SAE-6	.25 NPTF	**H3L**		**H3L/S**	
SAE-16	SAE-6	.25 NPTF	**H3M**		**H3M/S**	
SAE-20	SAE-6	.25 NPTF	**H3N**		**H3N/S**	
.75 BSPP	.25 BSPP	.25 BSPP	**H3W**		**H3W/S**	
1.00 BSPP	.25 BSPP	.25 BSPP	**H3X**		**H3X/S**	
1.25 BSPP	.25 BSPP	.25 BSPP	**H3Y**		**H3Y/S**	

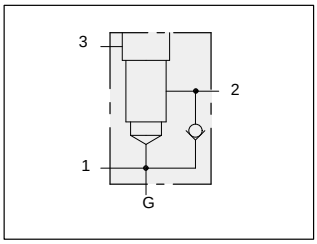

Body with high capacity port 3 reverse free flow check and gauge port for reducing/relieving applications.

T–17A Cavity Locating Shoulder Depth 26,9 mm.

Mounting Holes: 10,7 mm. diameter through hole. 2 places.

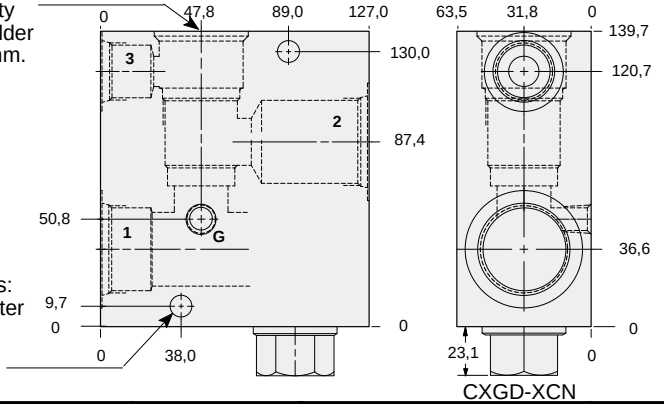

CXGD-XCN

TYPICAL CARTRIDGES USED WITH THIS BODY

PBHB - *** Page 3.07
PPHC - *** Page 3.13

Cartridge seal type determines check valve seal type.

Instructions for ordering complete cartridge and body assemblies. Page viii

Pressure ratings, material specifications. Page 11.02

Ports 1 & 2	*Port 3*	*Gauge Port*	ALUMINIUM		SG IRON	
			Model Code	*List Price*	*Model Code*	*List Price*
.75 NPTF	.75 NPTF	.25 NPTF	**H4D**		**H4D/S**	
1.00 NPTF	.75 NPTF	.25 NPTF	**H4E**		**H4E/S**	
1.25 NPTF	.75 NPTF	.25 NPTF	**H4F**		**H4F/S**	
SAE-12	SAE-12	.25 NPTF	**H4L**		**H4L/S**	
SAE-16	SAE-12	.25 NPTF	**H4M**		**H4M/S**	
SAE-20	SAE-12	.25 NPTF	**H4N**		**H4N/S**	
.75 BSPP	.75 BSPP	.25 BSPP	**H4W**		**H4W/S**	
1.00 BSPP	.75 BSPP	.25 BSPP	**H4X**		**H4X/S**	
1.25 BSPP	.75 BSPP	.25 BSPP	**H4Y**		**H4Y/S**	

LINE MOUNT BODIES

- Aluminium rated to 210 bar and SG Iron rated to 350 bar.

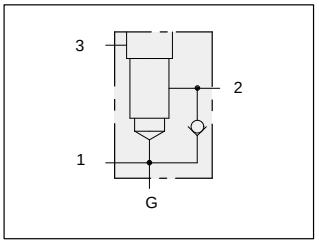

TYPICAL CARTRIDGES USED WITH THIS BODY

PBHB - *** Page 3.07
PBHC - *** Page 3.09

Cartridge seal type determines check valve seal type.

Instructions for ordering complete cartridge and body assemblies. Page viii

Pressure ratings, material specifications. Page 11.02

SAE Specifications. Page 11.03

1.00” SAE Code 61 flange port body with reverse free flow check and gauge port for reducing applications.

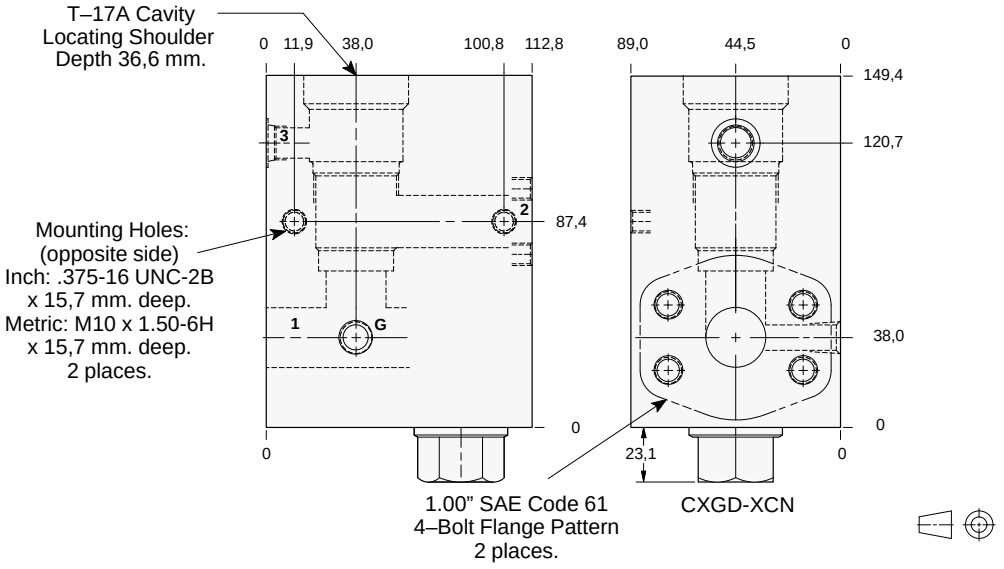

Mounting Hole Dimensions	*Port 3*	*Gauge Port*	ALUMINIUM		SG IRON	
			Model Code	*List Price*	*Model Code*	*List Price*
Inch	SAE-6	.25 NPTF	**H2P**		**H2P/S**	
Metric	.25 BSPP	.25 BSPP	**H2P/M**		**H2P/T**	

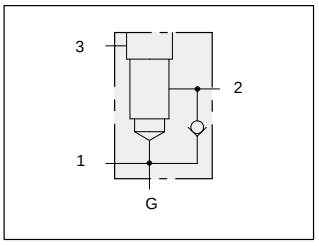

TYPICAL CARTRIDGES USED WITH THIS BODY

PBHB - *** Page 3.07
PBHC - *** Page 3.09

Cartridge seal type determines check valve seal type.

Instructions for ordering complete cartridge and body assemblies. Page viii

Pressure ratings, material specifications. Page 11.02

SAE Specifications. Page 11.03

1.00” SAE Code 62 flange port body with reverse free flow check and gauge port for reducing applications.

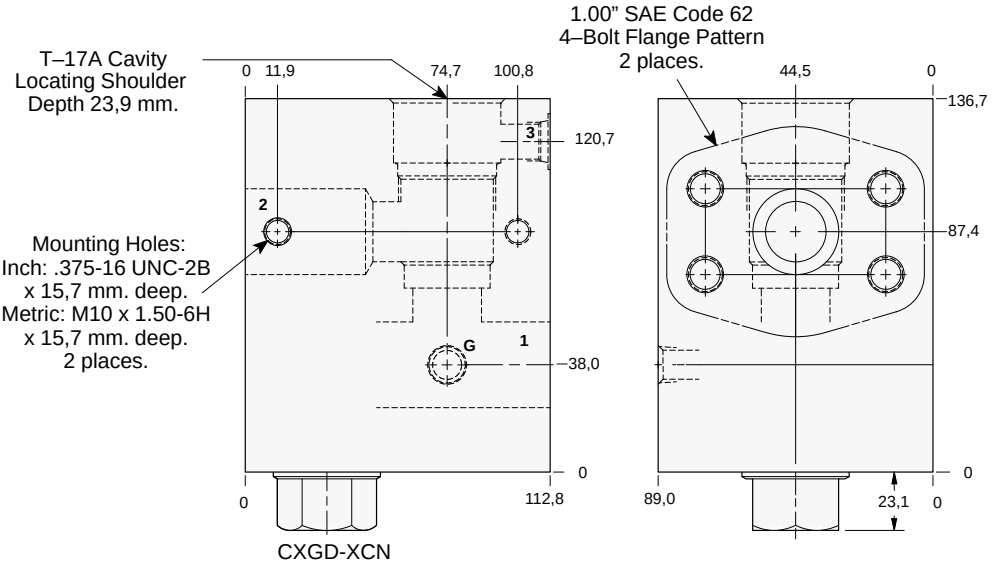

Mounting Hole Dimensions	*Port 3*	*Gauge Port*	ALUMINIUM		SG IRON	
			Model Code	*List Price*	*Model Code*	*List Price*
Inch	SAE-6	.25 NPTF	**H24**		**H24/S**	
Metric	.25 BSPP	.25 BSPP	**H24/M**		**H24/T**	

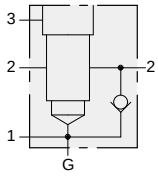

Through port 1.00” SAE Code 61 flange port body with reverse free flow check and gauge port for reducing applications.

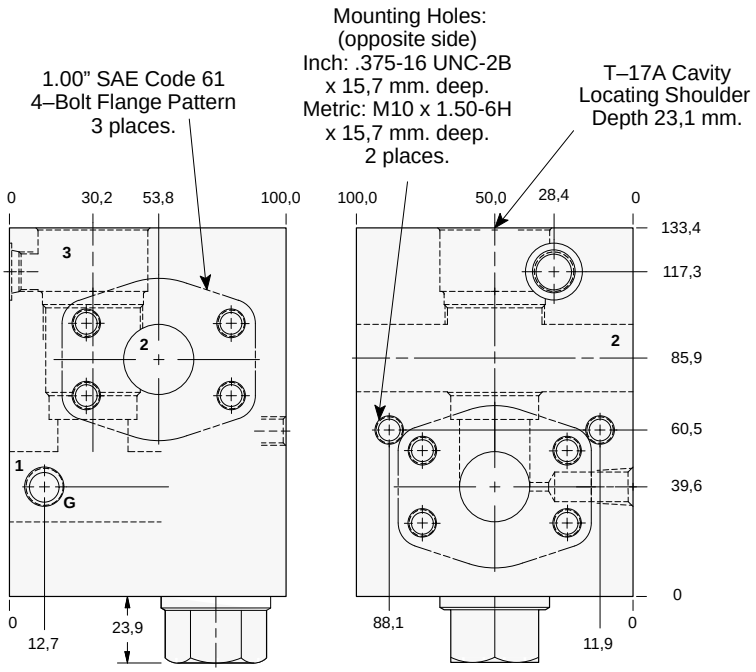

CXGD-XCN

TYPICAL CARTRIDGES USED WITH THIS BODY

PBHB - *** Page 3.07
PBHC - *** Page 3.09

Cartridge seal type determines check valve seal type.

Instructions for ordering complete cartridge and body assemblies. Page viii

Pressure ratings, material specifications. Page 11.02

SAE Specifications. Page 11.03

Mounting Hole Dimensions	*Port 3*	*Gauge Port*	ALUMINIUM		SG IRON	
			Model Code	*List Price*	*Model Code*	*List Price*
Inch	SAE-6	.25 NPTF	**H3P**		**H3P/S**	
Metric	.25 BSPP	.25 BSPP	**H3P/M**		**H3P/T**	

LINE MOUNT BODIES

- Aluminium rated to 210 bar and SG Iron rated to 350 bar.

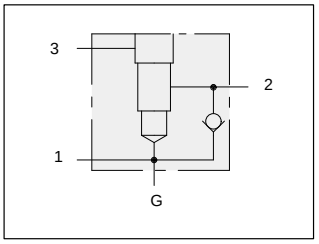

TYPICAL CARTRIDGES USED WITH THIS BODY

PBHB - *** Page 3.07
PBHC - *** Page 3.09

Cartridge seal type determines check valve seal type.

Instructions for ordering complete cartridge and body assemblies. Page viii

Pressure ratings, material specifications. Page 11.02

SAE Specifications. Page 11.03

1.25” SAE Code 61 flange port body with reverse free flow check and gauge port for reducing applications.

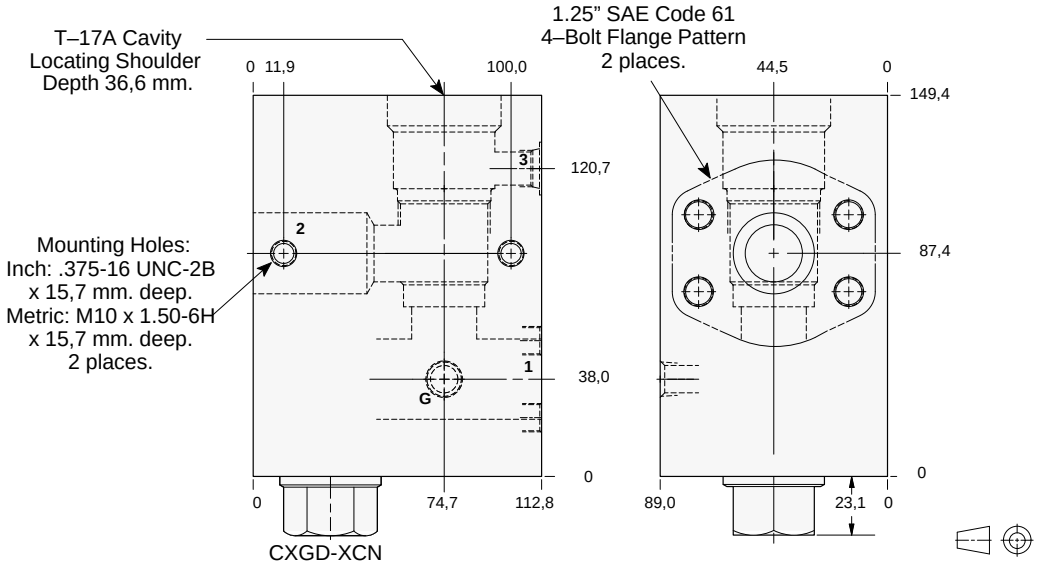

Mounting Hole Dimensions	*Port 3*	*Gauge Port*	ALUMINIUM		SG IRON	
			Model Code	*List Price*	*Model Code*	*List Price*
Inch	SAE-6	.25 NPTF	**H2Q**		**H2Q/S**	
Metric	.25 BSPP	.25 BSPP	**H2Q/M**		**H2Q/T**	

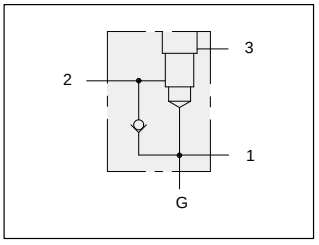

TYPICAL CARTRIDGES USED WITH THIS BODY

PBHB - *** Page 3.07
PBHC - *** Page 3.09

Cartridge seal type determines check valve seal type.

Instructions for ordering complete cartridge and body assemblies. Page viii

Pressure ratings, material specifications. Page 11.02

SAE Specifications. Page 11.03

1.25” SAE Code 62 flange port body with reverse free flow check and gauge port for reducing applications.

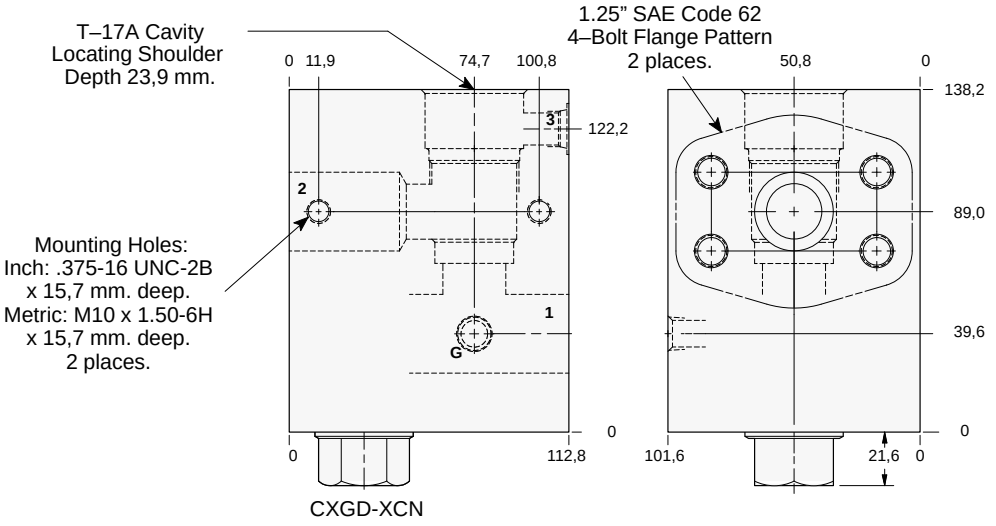

Mounting Hole Dimensions	*Port 3*	*Gauge Port*	ALUMINIUM		SG IRON	
			Model Code	*List Price*	*Model Code*	*List Price*
Inch	SAE-6	.25 NPTF	**H25**		**H25/S**	
Metric	.25 BSPP	.25 BSPP	**H25/M**		**H25/T**	

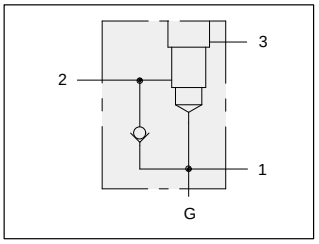

1.25” SAE Code 61 flange port body with high capacity port 3 reverse free flow check and gauge port for reducing/relieving applications.

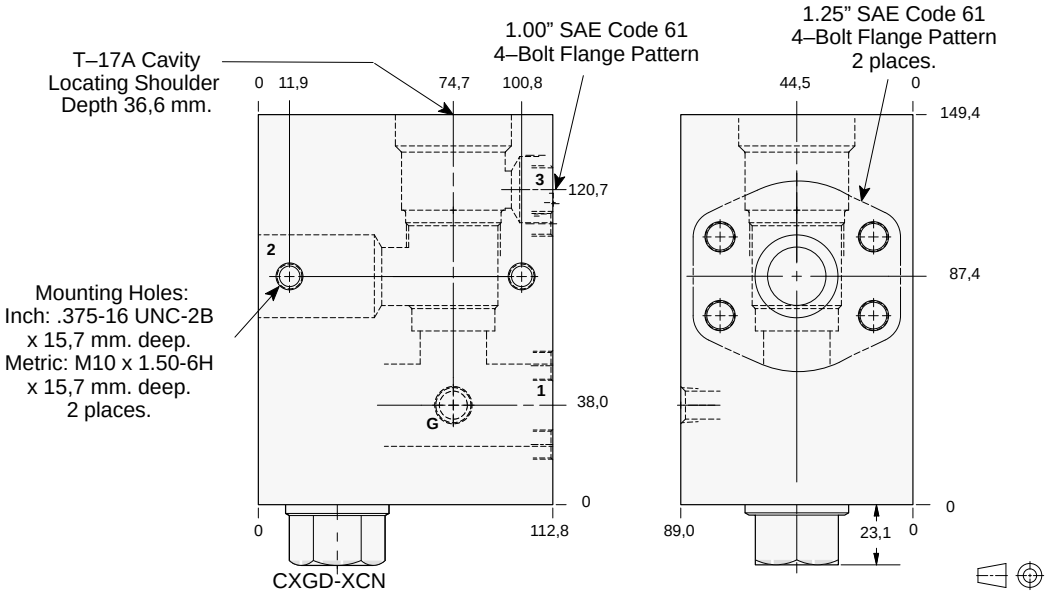

Mounting Hole Dimensions	*Port 3 SAE Code 61*	*Gauge Port*	**ALUMINIUM**		**SG IRON**	
			Model Code	*List Price*	*Model Code*	*List Price*
Inch	1.00”	.25 NPTF	**H4Q**		**H4Q/S**	
Metric	1.00”	.25 BSPP	**H4Q/M**		**H4Q/T**	

TYPICAL CARTRIDGES USED WITH THIS BODY

PPHB - *** Page 3.11
PPHC - *** Page 3.13

Cartridge seal type determines check valve seal type.

Instructions for ordering complete cartridge and body assemblies. Page viii

Pressure ratings, material specifications. Page 11.02

SAE Specifications. Page 11.03

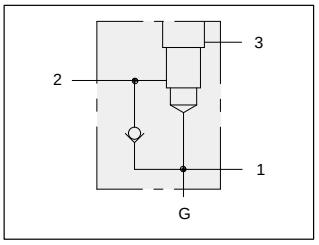

1.25” SAE Code 62 flange port body with high capacity port 3 reverse free flow check and gauge port for reducing/relieving applications.

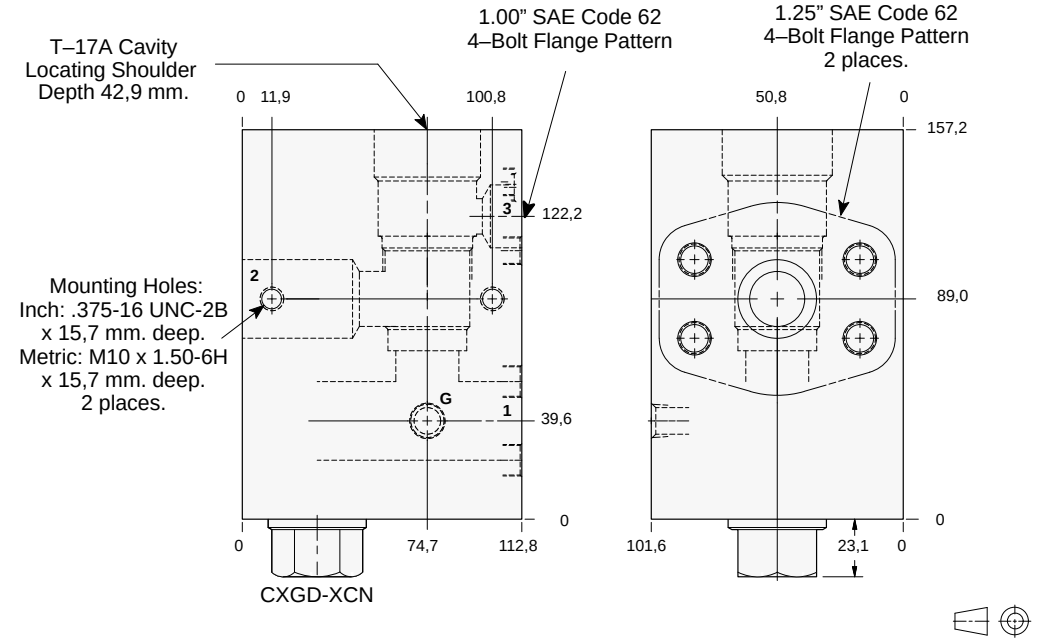

Mounting Hole Dimensions	*Port 3 SAE Code 62*	*Gauge Port*	**ALUMINIUM**		**SG IRON**	
			Model Code	*List Price*	*Model Code*	*List Price*
Inch	1.00”	.25 NPTF	**H45**		**H45/S**	
Metric	1.00”	.25 BSPP	**H45/M**		**H45/T**	

TYPICAL CARTRIDGES USED WITH THIS BODY

PPHB - *** Page 3.11
PPHC - *** Page 3.13

Cartridge seal type determines check valve seal type.

Instructions for ordering complete cartridge and body assemblies. Page viii

Pressure ratings, material specifications. Page 11.02

SAE Specifications. Page 11.03

LINE MOUNT BODIES

- Aluminium rated to 210 bar and SG Iron rated to 350 bar.

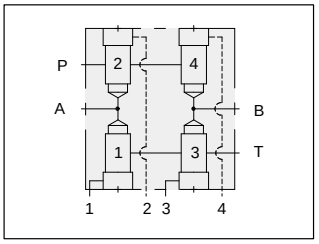

TYPICAL CARTRIDGES USED WITH THIS BODY

LOHC - *** Page 9.09
LKHC - *** Page 9.11
LPHC - *** Page 9.13
LRHC - *** Page 9.15

Instructions for ordering complete cartridge and body assemblies. Page viii

Pressure ratings, material specifications. Page 11.02

Four cavity four–way logic body for directional applications.

Mounting Holes:
Inch: .375-16 UNC-2B
x 15,7 mm. deep.
Metric: M10 x 1.50-6H
x 15,7 mm. deep.
2 places.

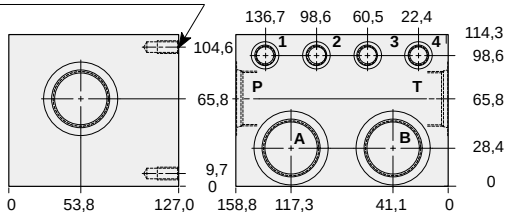

T–17A Cavity
Locating Shoulder
Depth 23,1 mm.
4 places.

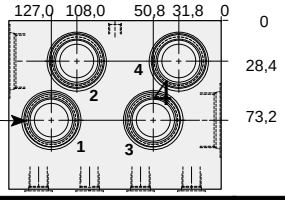

Mounting Hole Dimensions	*Ports A & B P & T*	*Ports 1 & 2, 3 & 4*	ALUMINIUM		SG IRON	
			Model Code	*List Price*	*Model Code*	*List Price*
Inch	.75 NPTF	.25 NPTF	**YRS**		**YRS/S**	
Inch	1.00 NPTF	.25 NPTF	**YRB**		**YRB/S**	
Inch	1.25 NPTF	.25 NPTF	**YRO**		**YRO/S**	
Inch	SAE-12	SAE-6	**YRN**		**YRN/S**	
Inch	SAE-16	SAE-6	**YRR**		**YRR/S**	
Inch	SAE-20	SAE-6	**YRL**		**YRL/S**	
Metric	.75 BSPP	.25 BSPP	**YRK**		**YRK/S**	
Metric	1.00 BSPP	.25 BSPP	**YRJ**		**YRJ/S**	
Metric	1.25 BSPP	.25 BSPP	**YRG**		**YRG/S**	

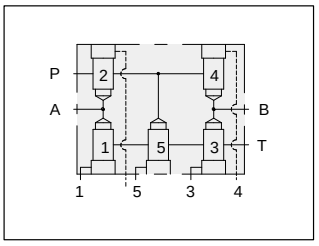

TYPICAL CARTRIDGES USED WITH THIS BODY

LOHC - *** Page 9.09
LKHC - *** Page 9.11
LPHC - *** Page 9.13
LRHC - *** Page 9.15

Instructions for ordering complete cartridge and body assemblies. Page viii

Pressure ratings, material specifications. Page 11.02

Five cavity four–way logic body for directional applications.

Mounting Holes:
Inch: .375-16 UNC-2B
x 15,7 mm. deep.
Metric: M10 x 1.50-6H
x 15,7 mm. deep.
2 places.

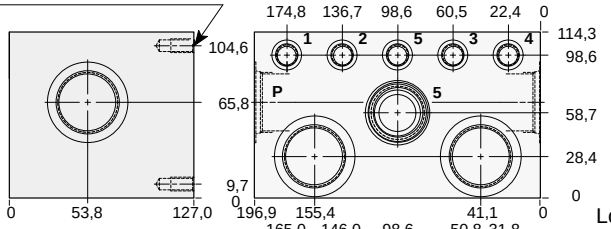

T–17A Cavity
Locating Shoulder
Depth 23,1 mm.
5 places.

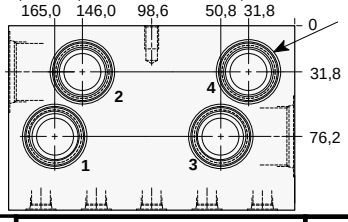

Mounting Hole Dimensions	*Ports A & B P & T*	*Ports 1,2, 3,4 & 5*	ALUMINIUM		SG IRON	
			Model Code	*List Price*	*Model Code*	*List Price*
Inch	.75 NPTF	.25 NPTF	**YQS**		**YQS/S**	
Inch	1.00 NPTF	.25 NPTF	**YQB**		**YQB/S**	
Inch	1.25 NPTF	.25 NPTF	**YQO**		**YQO/S**	
Inch	SAE-12	SAE-6	**YQN**		**YQN/S**	
Inch	SAE-16	SAE-6	**YQR**		**YQR/S**	
Inch	SAE-20	SAE-6	**YQL**		**YQL/S**	
Metric	.75 BSPP	.25 BSPP	**YQK**		**YQK/S**	
Metric	1.00 BSPP	.25 BSPP	**YQJ**		**YQJ/S**	
Metric	1.25 BSPP	.25 BSPP	**YQG**		**YQG/S**	

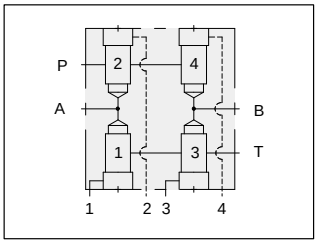

Four cavity four–way 1.00” SAE Code 61 flange port logic body for directional applications.

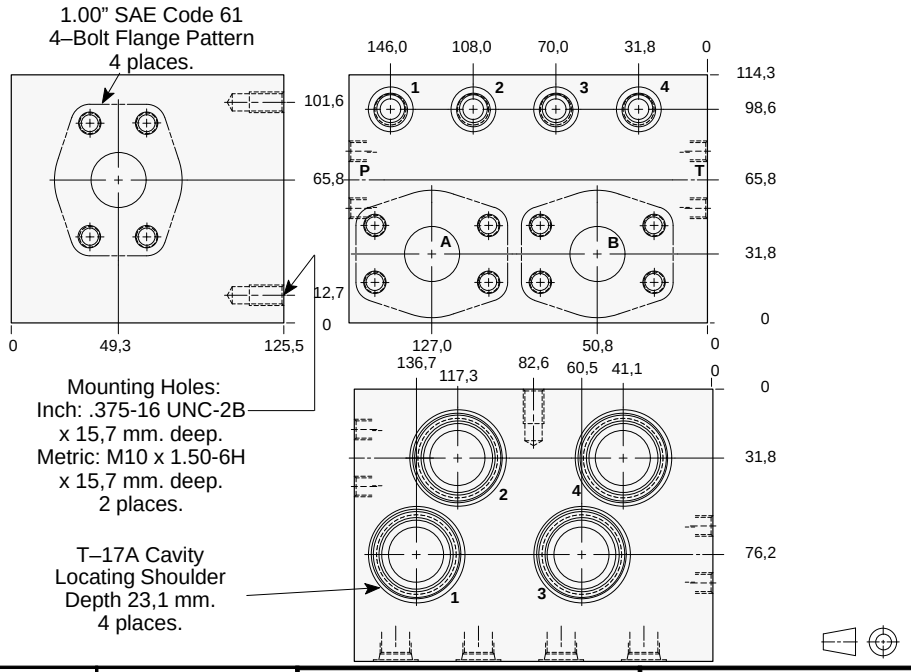

TYPICAL CARTRIDGES USED WITH THIS BODY

LOHC	- ***	Page	9.09
LKHC	- ***	Page	9.11
LPHC	- ***	Page	9.13
LRHC	- ***	Page	9.15

Instructions for ordering complete cartridge and body assemblies.	Page	viii
Pressure ratings, material specifications.	Page	11.02
SAE Specifications.	Page	11.03

Mounting Hole Dimensions	*Ports 1 & 2, 3 & 4*	ALUMINIUM		SG IRON	
		Model Code	*List Price*	*Model Code*	*List Price*
Inch	SAE-6	**YRH**		**YRH/S**	
Metric	.25 BSPP	**YRH/M**		**YRH/T**	

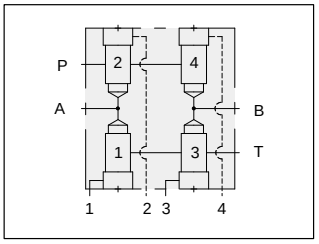

Four cavity four–way 1.25” SAE Code 61 flange port logic body for directional applications.

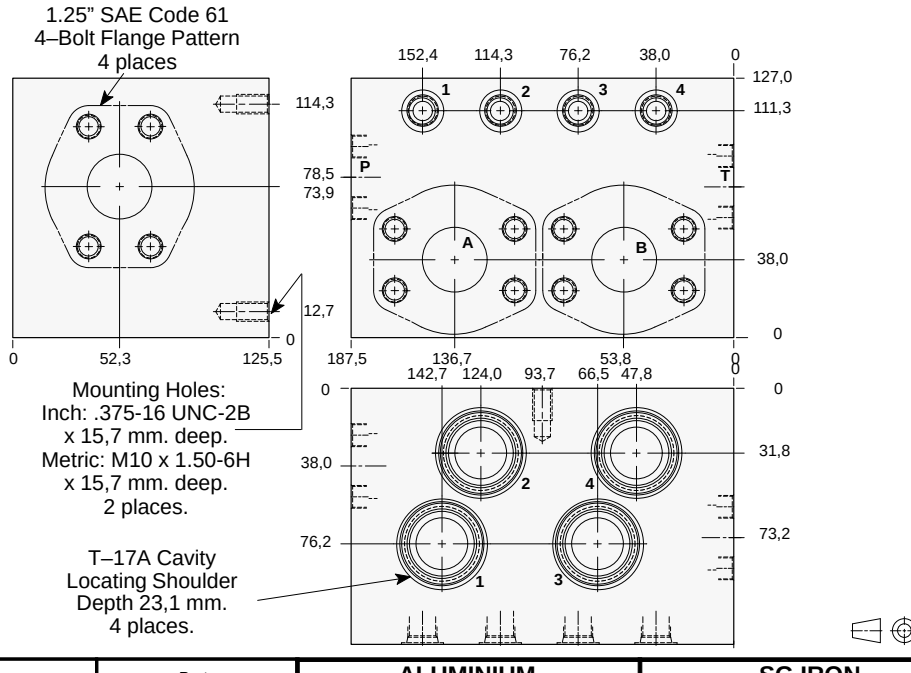

TYPICAL CARTRIDGES USED WITH THIS BODY

LOHC	- ***	Page	9.09
LKHC	- ***	Page	9.11
LPHC	- ***	Page	9.13
LRHC	- ***	Page	9.15

Instructions for ordering complete cartridge and body assemblies.	Page	viii
Pressure ratings, material specifications.	Page	11.02
SAE Specifications.	Page	11.03

Mounting Hole Dimensions	*Ports 1 & 2, 3 & 4*	ALUMINIUM		SG IRON	
		Model Code	*List Price*	*Model Code*	*List Price*
Inch	SAE-6	**YRF**		**YRF/S**	
Metric	.25 BSPP	**YRF/M**		**YRF/T**	

LINE MOUNT BODIES

- Aluminium rated to 210 bar and SG Iron rated to 350 bar.

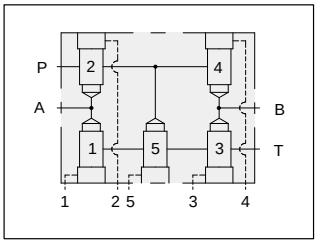

TYPICAL CARTRIDGES USED WITH THIS BODY

LOHC	- ***	Page	9.09
LKHC	- ***	Page	9.11
LPHC	- ***	Page	9.13
LRHC	- ***	Page	9.15

Instructions for ordering complete cartridge and body assemblies.	Page	viii
Pressure ratings, material specifications.	Page	11.02
SAE Specifications.	Page	11.03

Five cavity four–way 1.00” SAE Code 61 flange port logic body for directional applications.

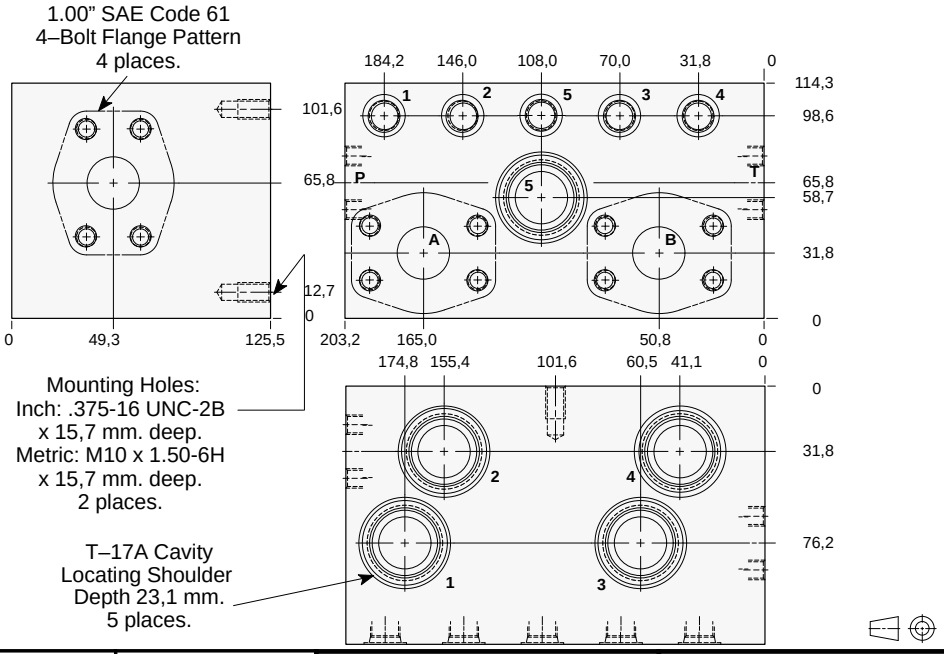

Mounting Hole Dimensions	*Ports 1, 2 3, 4 & 5*	ALUMINIUM		SG IRON	
		Model Code	*List Price*	*Model Code*	*List Price*
Inch	SAE-6	**YQH**		**YQH/S**	
Metric	.25 BSPP	**YQH/M**		**YQH/T**	

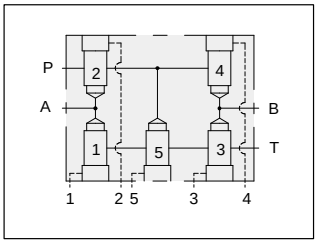

TYPICAL CARTRIDGES USED WITH THIS BODY

LOHC	- ***	Page	9.09
LKHC	- ***	Page	9.11
LPHC	- ***	Page	9.13
LRHC	- ***	Page	9.15

Instructions for ordering complete cartridge and body assemblies.	Page	viii
Pressure ratings, material specifications.	Page	11.02
SAE Specifications.	Page	11.03

Five cavity four–way 1.25” SAE Code 61 flange port logic body for directional applications.

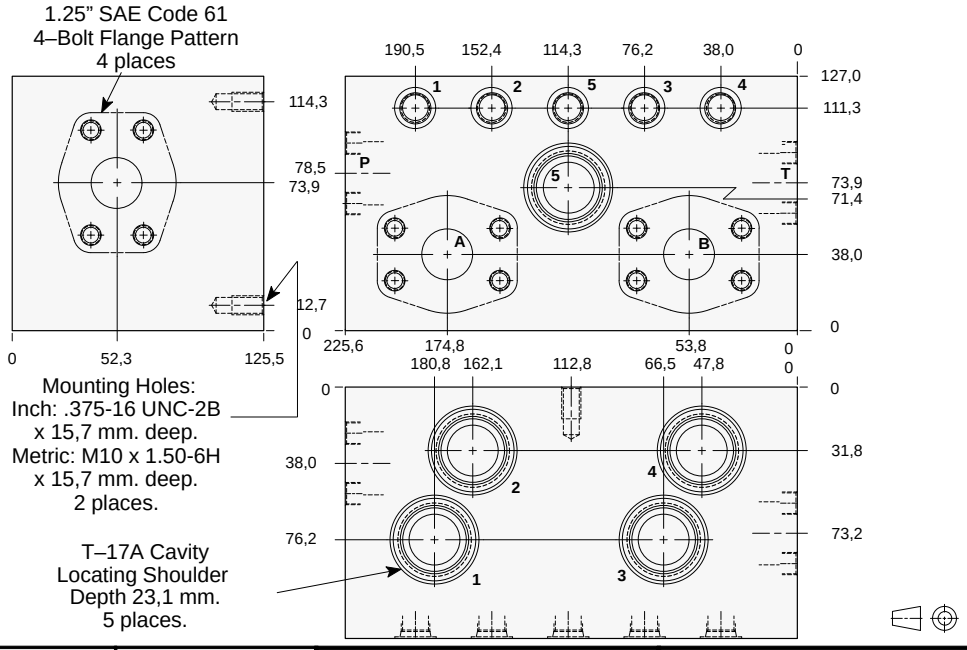

Mounting Hole Dimensions	*Ports 1, 2 3, 4 & 5*	ALUMINIUM		SG IRON	
		Model Code	*List Price*	*Model Code*	*List Price*
Inch	SAE-6	**YQF**		**YQF/S**	
Metric	.25 BSPP	**YQF/M**		**YQF/T**	

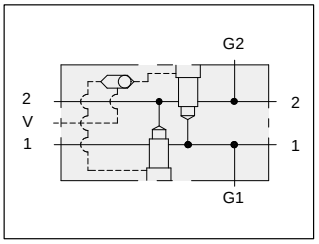

Two cavity through port body with shuttle and gauge ports.

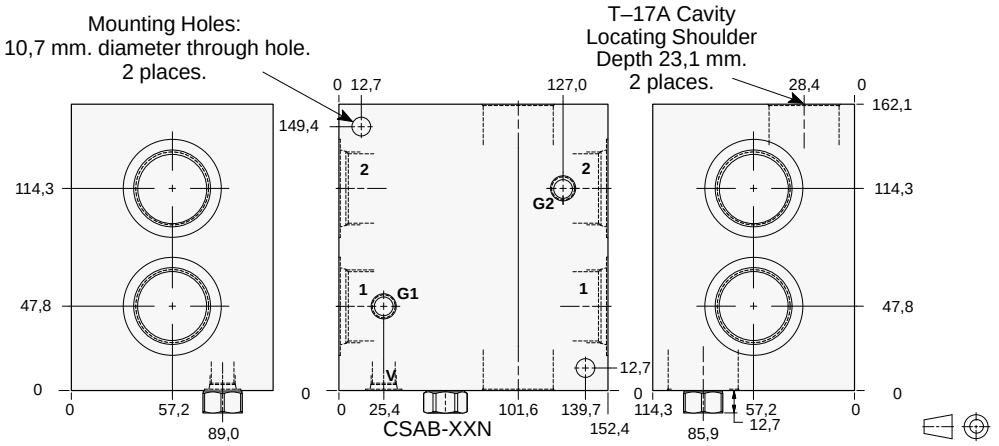

TYPICAL CARTRIDGES USED WITH THIS BODY

RVGA - *** Page 1.19

Cartridge seal type determines check valve seal type.

Instructions for ordering complete cartridge and body assemblies. Page viii

Pressure ratings, material specifications. Page 11.02

Ports 1 & 2	*Port V*	*Gauge Port*	ALUMINIUM		SG IRON	
			Model Code	*List Price*	*Model Code*	*List Price*
.75 NPTF	.25 NPTF	.25 NPTF	**XCD**		**XCD/S**	
1.00 NPTF	.25 NPTF	.25 NPTF	**XCE**		**XCE/S**	
1.25 NPTF	.25 NPTF	.25 NPTF	**XCF**		**XCF/S**	
SAE-12	SAE-6	.25 NPTF	**XCL**		**XCL/S**	
SAE-16	SAE-6	.25 NPTF	**XCM**		**XCM/S**	
SAE-20	SAE-6	.25 NPTF	**XCN**		**XCN/S**	
.75 BSPP	.25 BSPP	.25 BSPP	**XCW**		**XCW/S**	
1.00 BSPP	.25 BSPP	.25 BSPP	**XCX**		**XCX/S**	
1.25 BSPP	.25 BSPP	.25 BSPP	**XCY**		**XCY/S**	

LINE MOUNT BODIES

- Aluminium rated to 210 bar and SG Iron rated to 350 bar.

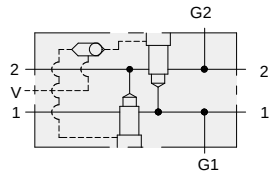

TYPICAL CARTRIDGES USED WITH THIS BODY

RVGA - *** Page 1.19

Cartridge seal type determines check valve seal type.

Instructions for ordering complete cartridge and body assemblies. Page viii

Pressure ratings, material specifications. Page 11.02

SAE Specifications. Page 11.03

Two cavity through flange port 1.00” SAE Code 61 body with shuttle and gauge ports.

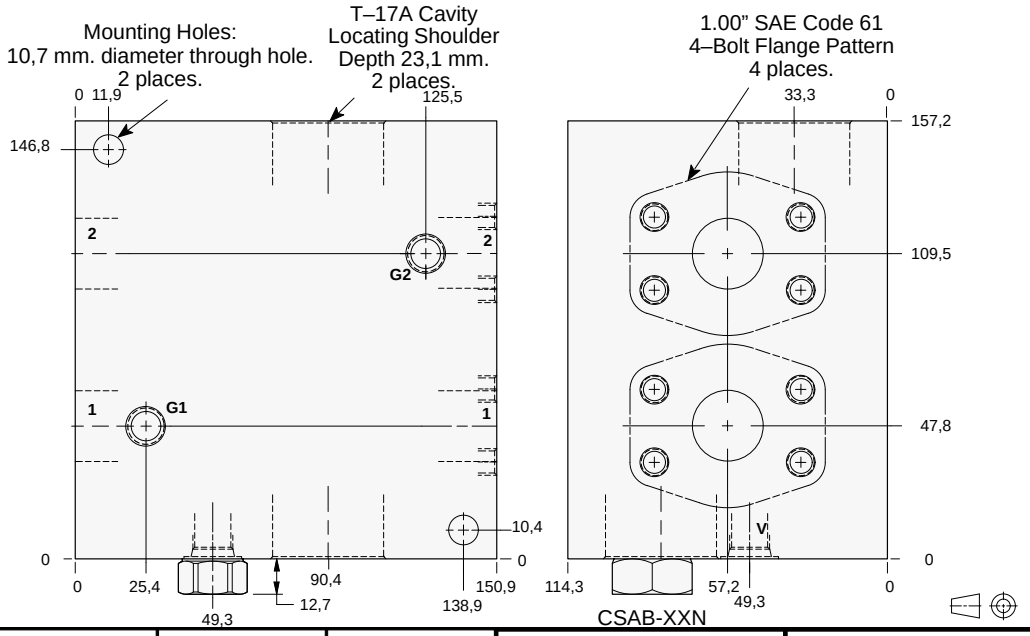

Mounting Hole Dimensions	Port V	Gauge Port	ALUMINIUM		SG IRON	
			Model Code	List Price	Model Code	List Price
Inch	SAE-6	.25 NPTF	**XCP**		**XCP/S**	
Metric	.25 BSPP	.25 BSPP	**XCP/M**		**XCP/T**	

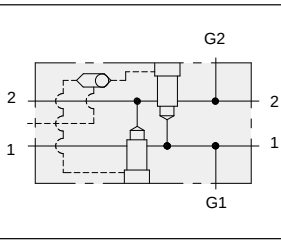

TYPICAL CARTRIDGES USED WITH THIS BODY

RVGA - *** Page 1.19

Cartridge seal type determines check valve seal type.

Instructions for ordering complete cartridge and body assemblies. Page viii

Pressure ratings, material specifications. Page 11.02

SAE Specifications. Page 11.03

Two cavity through flange port 1.00” SAE Code 62 body with shuttle and gauge ports.

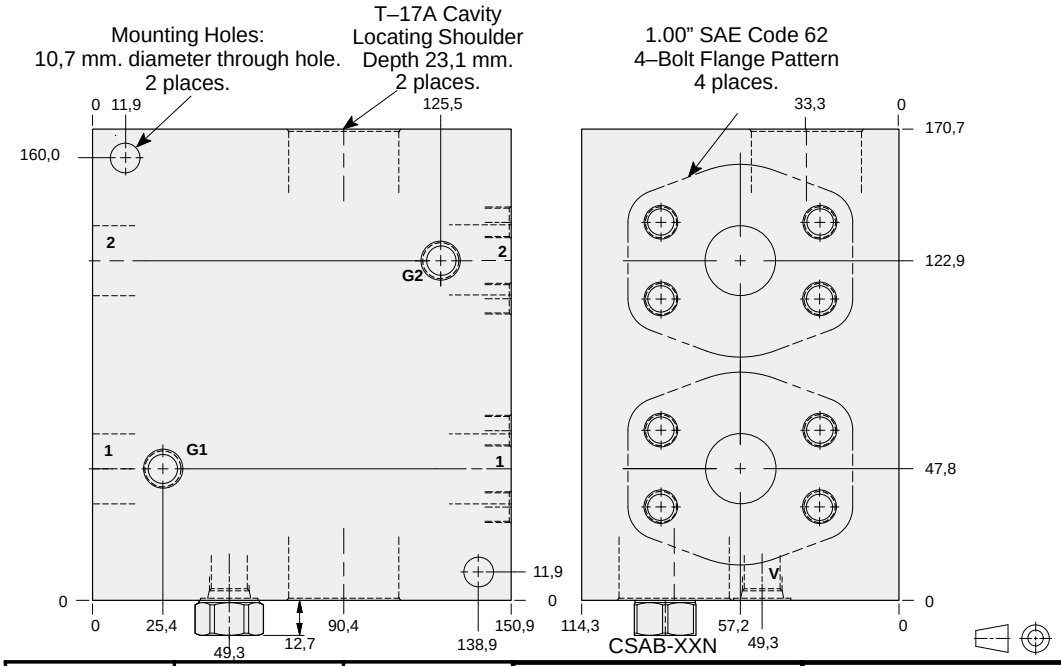

Mounting Hole Dimensions	Port V	Gauge Port	ALUMINIUM		SG IRON	
			Model Code	List Price	Model Code	List Price
Inch	SAE-6	.25 NPTF	**XC4**		**XC4/S**	
Metric	.25 BSPP	.25 BSPP	**XC4/M**		**XC4/T**	

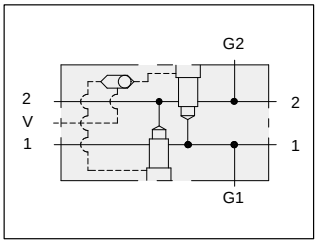

TYPICAL CARTRIDGES USED WITH THIS BODY

RVGA - *** Page 1.19

Cartridge seal type determines check valve seal type.

Instructions for ordering complete cartridge and body assemblies. Page viii

Pressure ratings, material specifications. Page 11.02

SAE Specifications. Page 11.03

Two cavity through flange port 1.25” SAE Code 61 body with shuttle and gauge ports.

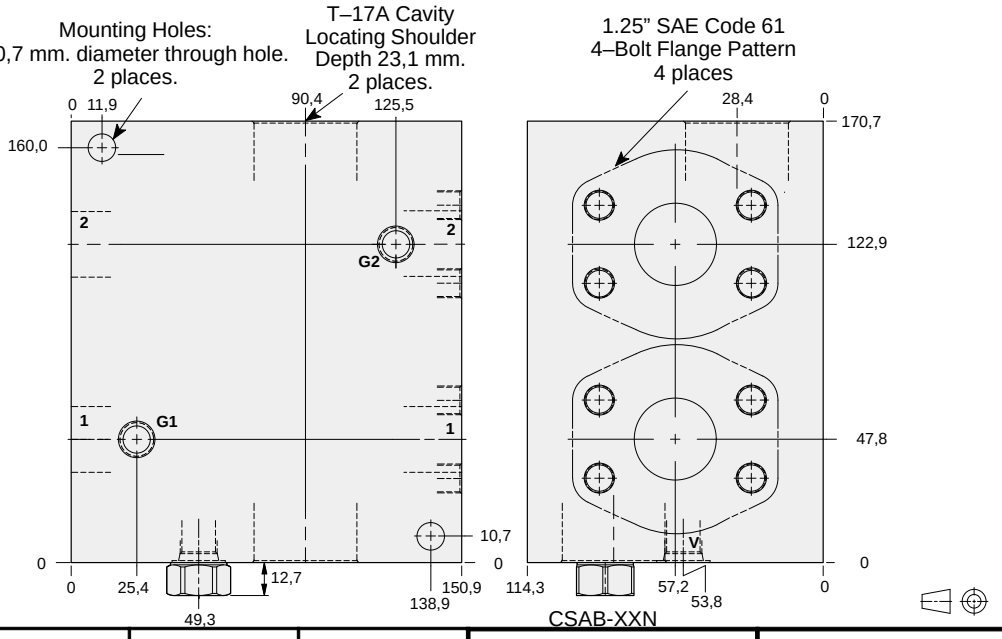

Mounting Hole Dimensions	*Port V*	*Gauge Port*	ALUMINIUM		SG IRON	
			Model Code	*List Price*	*Model Code*	*List Price*
Inch	SAE-6	.25 NPTF	**XCQ**		**XCQ/S**	
Metric	.25 BSPP	.25 BSPP	**XCQ/M**		**XCQ/T**	

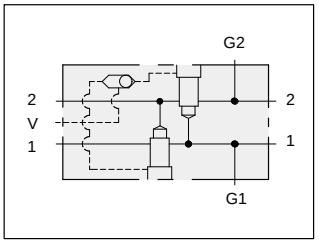

TYPICAL CARTRIDGES USED WITH THIS BODY

RVGA - *** Page 1.19

Cartridge seal type determines check valve seal type.

Instructions for ordering complete cartridge and body assemblies. Page viii

Pressure ratings, material specifications. Page 11.02

SAE Specifications. Page 11.03

Two cavity through flange port 1.25” SAE Code 62 body with shuttle and gauge ports.

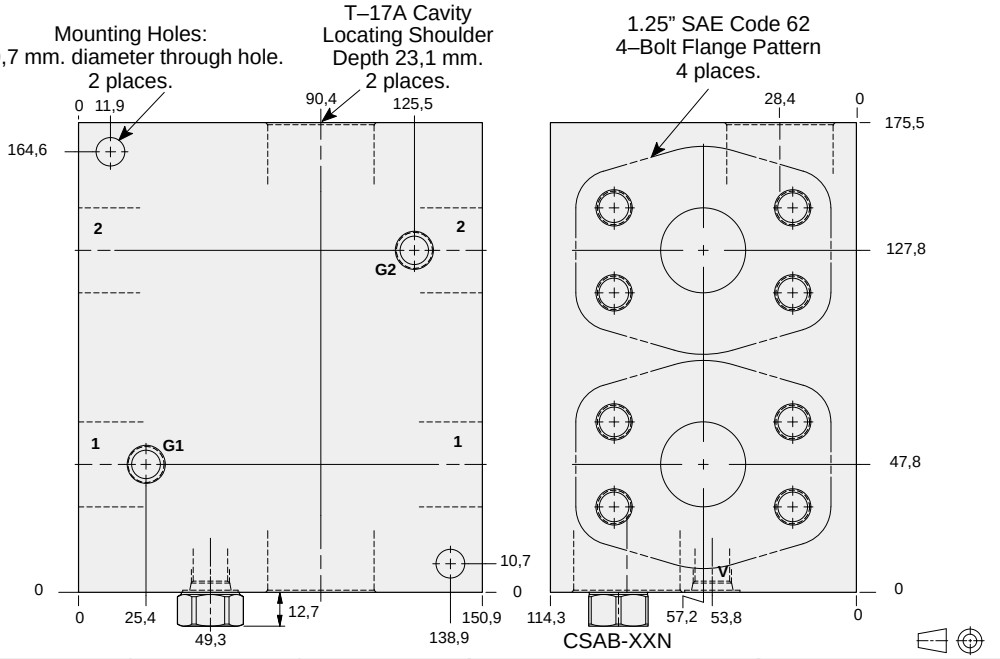

Mounting Hole Dimensions	*Port V*	*Gauge Port*	ALUMINIUM		SG IRON	
			Model Code	*List Price*	*Model Code*	*List Price*
Inch	SAE-6	.25 NPTF	**XC5**		**XC5/S**	
Metric	.25 BSPP	.25 BSPP	**XC5/M**		**XC5/T**	

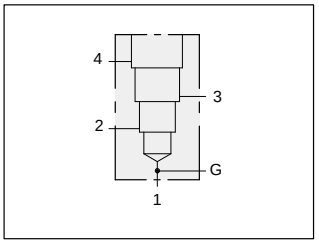

90 degree body with gauge port.

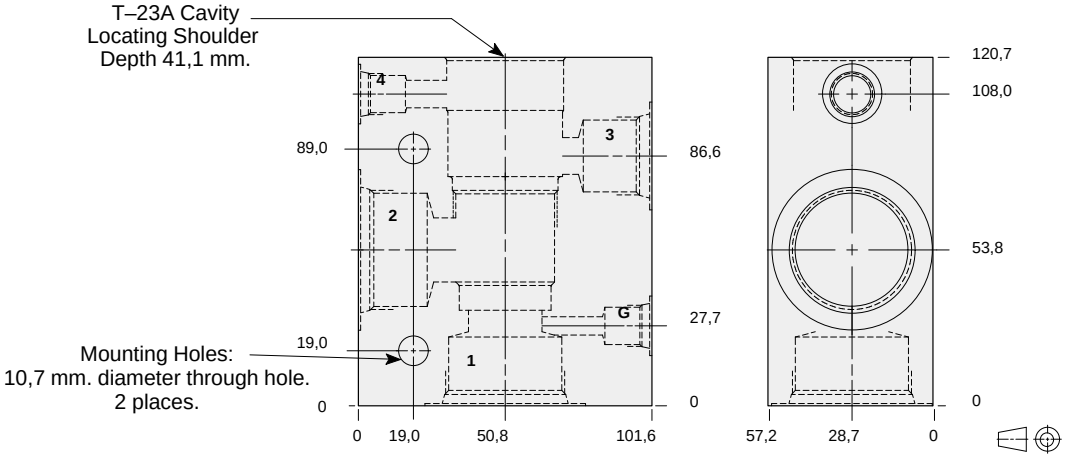

TYPICAL CARTRIDGES USED WITH THIS BODY

RVGD - ***	Page	1.21
PVHA - ***	Page	3.15
PVHB - ***	Page	3.17
CWGA - ***	Page	4.19
CWGG - ***	Page	4.21
CVGV - ***	Page	4.23
FVEA - ***	Page	6.05

Instructions for ordering complete cartridge and body assemblies. Page viii

Pressure ratings, material specifications. Page 11.02

Ports 1 & 2	*Port 3*	*Port 4*	*Gauge Port*	ALUMINIUM		SG IRON	
				Model Code	*List Price*	*Model Code*	*List Price*
.75 NPTF	.75 NPTF	.25 NPTF	.25 NPTF	**PAD**		**PAD/S**	
1.00 NPTF	.75 NPTF	.25 NPTF	.25 NPTF	**PAE**		**PAE/S**	
1.25 NPTF	.75 NPTF	.25 NPTF	.25 NPTF	**PAF**		**PAF/S**	
SAE-12	SAE-12	SAE-6	.25 NPTF	**PAL**		**PAL/S**	
SAE-16	SAE-12	SAE-6	.25 NPTF	**PAM**		**PAM/S**	
SAE-20	SAE-12	SAE-6	.25 NPTF	**PAN**		**PAN/S**	
.75 BSPP	.75 BSPP	.25 BSPP	.25 BSPP	**PAW**		**PAW/S**	
1.00 BSPP	.75 BSPP	.25 BSPP	.25 BSPP	**PAX**		**PAX/S**	
1.25 BSPP	.75 BSPP	.25 BSPP	.25 BSPP	**PAY**		**PAY/S**	

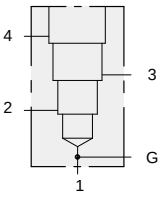

TYPICAL CARTRIDGES USED WITH THIS BODY

RVGD - ***	Page	1.21
PVHA - ***	Page	3.15
PVHB - ***	Page	3.17
CWGA - ***	Page	4.19
CWGG - ***	Page	4.21
CVGV - ***	Page	4.23
FVEA - ***	Page	6.05

Instructions for ordering complete cartridge and body assemblies. Page viii

Pressure ratings, material specifications. Page 11.02

SAE Specifications. Page 11.03

90 degree 1.00” SAE Code 61 flange port body with gauge port.

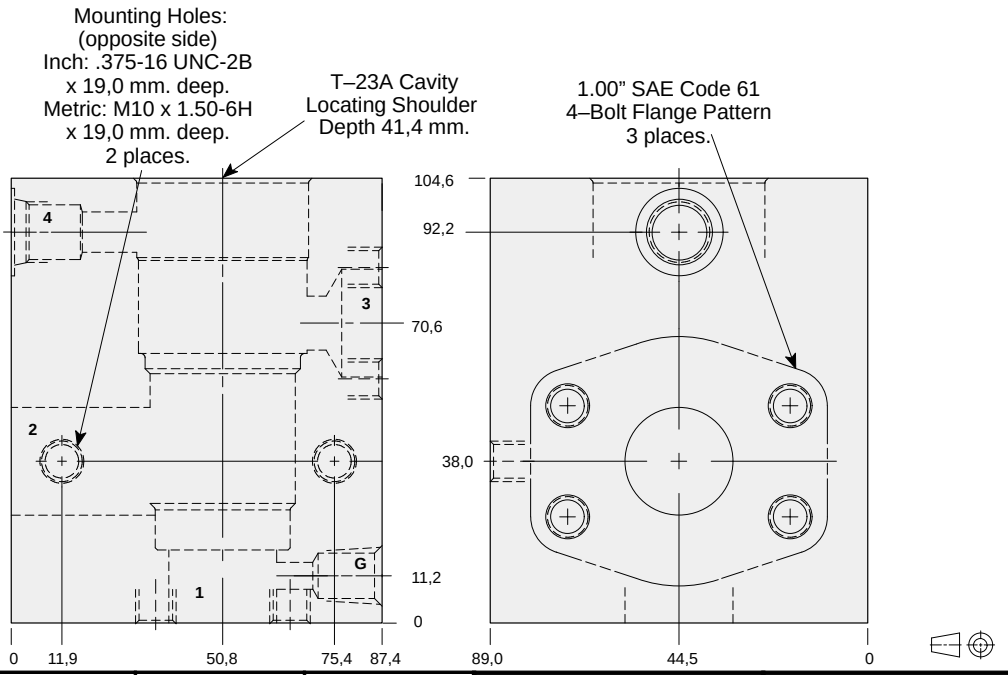

Mounting Hole Dimensions	*Port 4*	*Gauge Port*	ALUMINIUM		SG IRON	
			Model Code	*List Price*	*Model Code*	*List Price*
Inch	SAE-6	.25 NPTF	**PAP**		**PAP/S**	
Metric	.25 BSPP	.25 BSPP	**PAP/M**		**PAP/T**	

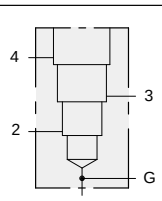

TYPICAL CARTRIDGES USED WITH THIS BODY

RVGD - ***	Page	1.21
PVHA - ***	Page	3.15
PVHB - ***	Page	3.17
CWGA - ***	Page	4.19
CWGG - ***	Page	4.21
CVGV - ***	Page	4.23
FVEA - ***	Page	6.05

Instructions for ordering complete cartridge and body assemblies. Page viii

Pressure ratings, material specifications. Page 11.02

SAE Specifications. Page 11.03

90 degree 1.00” SAE Code 62 flange port body with gauge port.

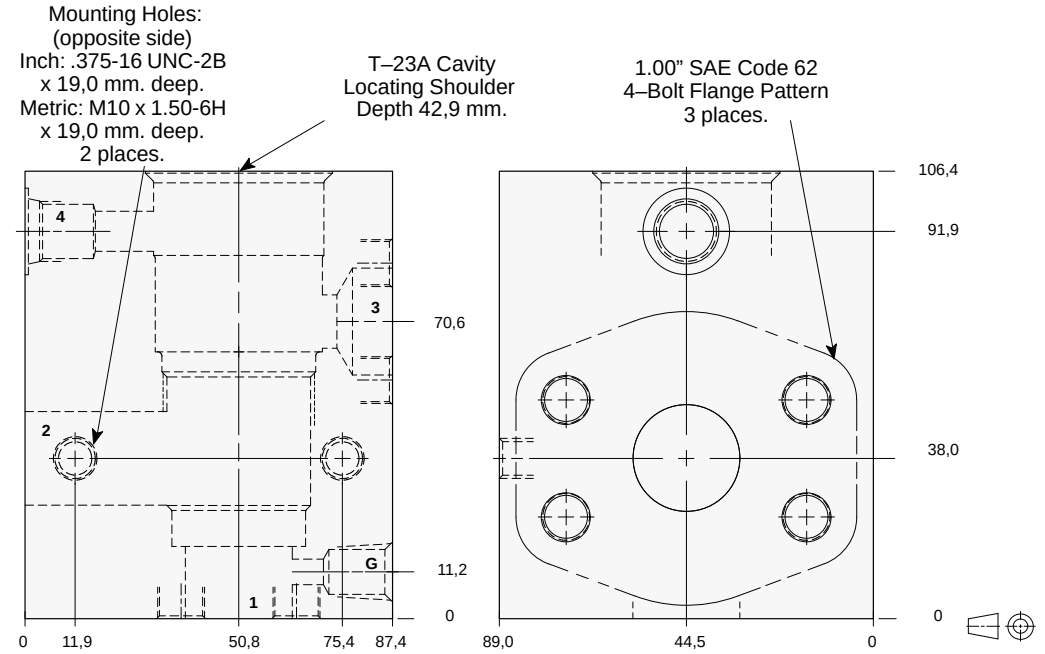

Mounting Hole Dimensions	*Port 4*	*Gauge Port*	ALUMINIUM		SG IRON	
			Model Code	*List Price*	*Model Code*	*List Price*
Inch	SAE-6	.25 NPTF	**PA4**		**PA4/S**	
Metric	.25 BSPP	.25 BSPP	**PA4/M**		**PA4/T**	

- Aluminium rated to 210 bar and SG Iron rated to 350 bar.

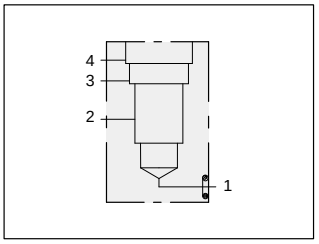

Direct mount 1.00” SAE Code 62 body.

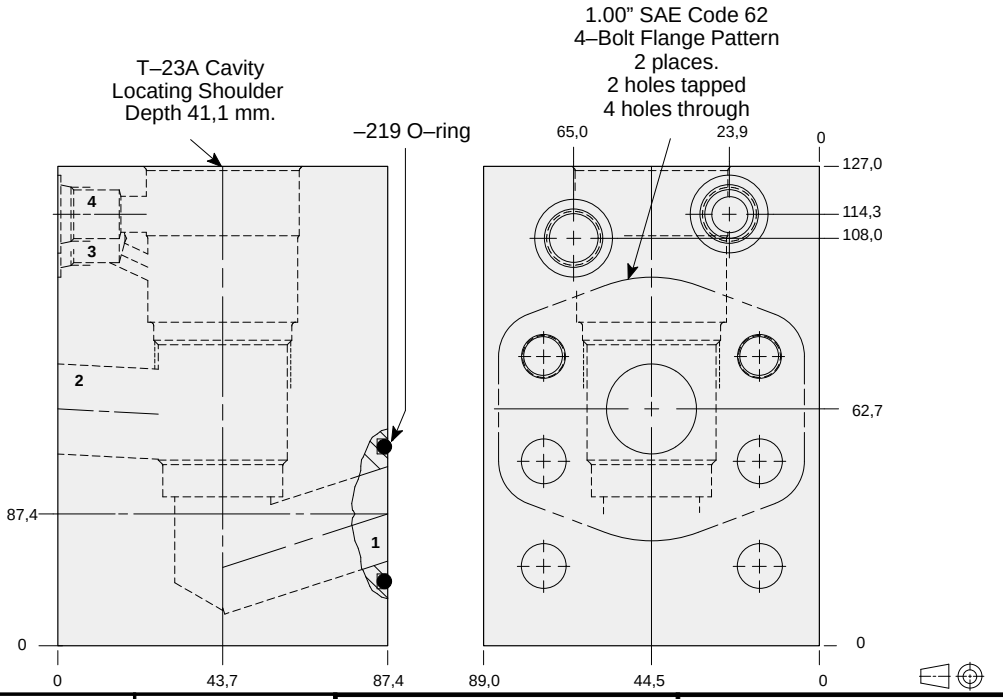

Mounting Hole Dimensions	*Ports 3 & 4*	ALUMINIUM		SG IRON	
		Model Code	*List Price*	*Model Code*	*List Price*
Inch	SAE-6	**WHA**		**WHA/S**	
Metric	.25 BSPP	**WHA/M**		**WHA/T**	

TYPICAL CARTRIDGES USED WITH THIS BODY

RVGA - *** Page 1.19
CWGA - *** Page 4.19
CWGG - *** Page 4.21
CVGV - *** Page 4.23

Cartridge seal type determines O–ring type.

Instructions for ordering complete cartridge and body assemblies. Page viii

Pressure ratings, material specifications. Page 11.02

SAE Specifications. Page 11.03

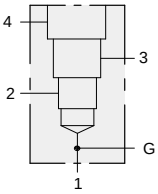

TYPICAL CARTRIDGES USED WITH THIS BODY

RVGD - ***	Page	1.21
PVHA - ***	Page	3.15
PVHB - ***	Page	3.17
CWGA - ***	Page	4.19
CWGG - ***	Page	4.21
CVGV - ***	Page	4.23
FVEA - ***	Page	6.05

Instructions for ordering complete cartridge and body assemblies. Page viii

Pressure ratings, material specifications. Page 11.02

SAE Specifications. Page 11.03

90 degree 1.25” SAE Code 61 flange port body with gauge port.

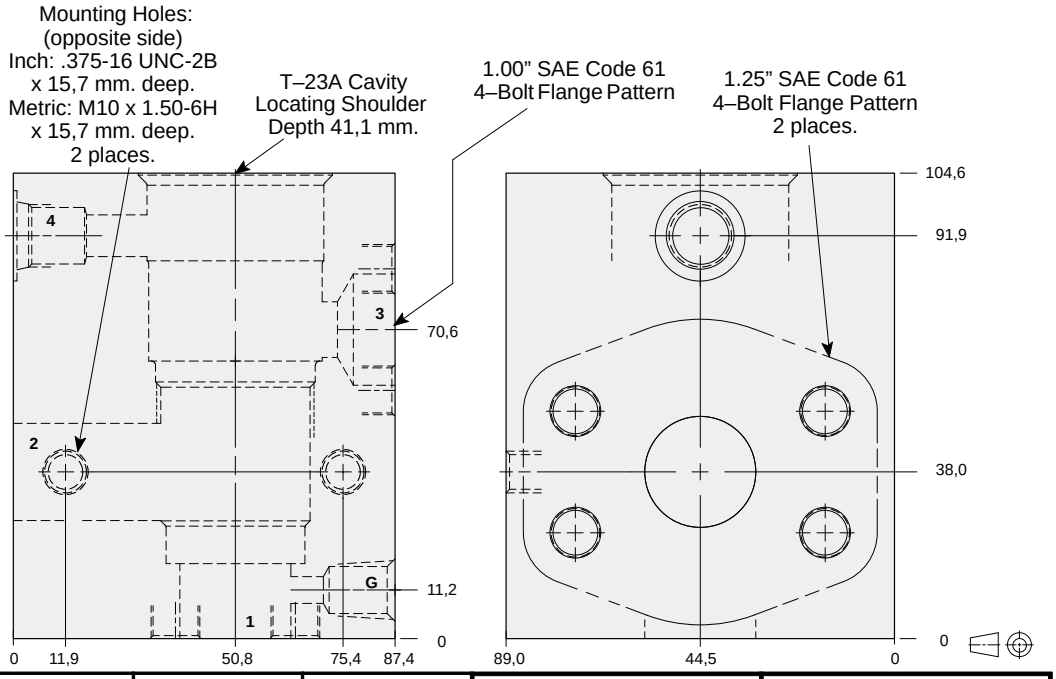

Mounting Hole Dimensions	*Port 4*	*Gauge Port*	ALUMINIUM		SG IRON	
			Model Code	*List Price*	*Model Code*	*List Price*
Inch	SAE-6	.25 NPTF	**PAQ**		**PAQ/S**	
Metric	.25 BSPP	.25 BSPP	**PAQ/M**		**PAQ/T**	

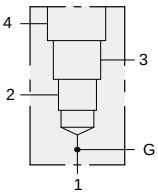

TYPICAL CARTRIDGES USED WITH THIS BODY

RVGD - ***	Page	1.21
PVHA - ***	Page	3.15
PVHB - ***	Page	3.17
CWGA - ***	Page	4.19
CWGG - ***	Page	4.21
CVGV - ***	Page	4.23
FVEA - ***	Page	6.05

Instructions for ordering complete cartridge and body assemblies. Page viii

Pressure ratings, material specifications. Page 11.02

SAE Specifications. Page 11.03

90 degree 1.25” SAE Code 62 flange port body with gauge port.

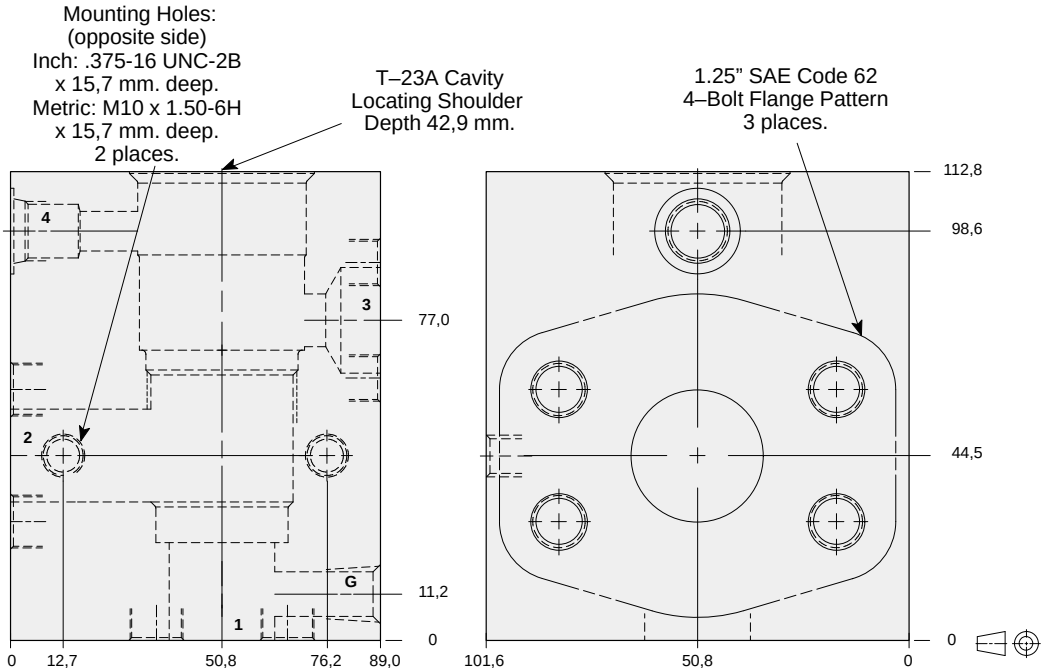

Mounting Hole Dimensions	*Port 4*	*Gauge Port*	ALUMINIUM		SG IRON	
			Model Code	*List Price*	*Model Code*	*List Price*
Inch	SAE-6	.25 NPTF	**PA5**		**PA5/S**	
Metric	.25 BSPP	.25 BSPP	**PA5/M**		**PA5/T**	

LINE MOUNT BODIES

- Aluminium rated to 210 bar and SG Iron rated to 350 bar.

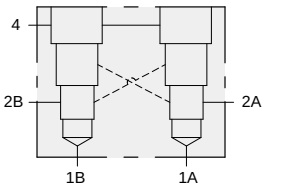

TYPICAL CARTRIDGES USED WITH THIS BODY

CWGA - *** Page 4.19
CWGG - *** Page 4.21
CVGV - *** Page 4.23

Instructions for ordering complete cartridge and body assemblies. Page iii

Pressure ratings, material specifications. Page 11.02

Two cavity 90 degree cross–piloted body with common port 4 for load control applications.

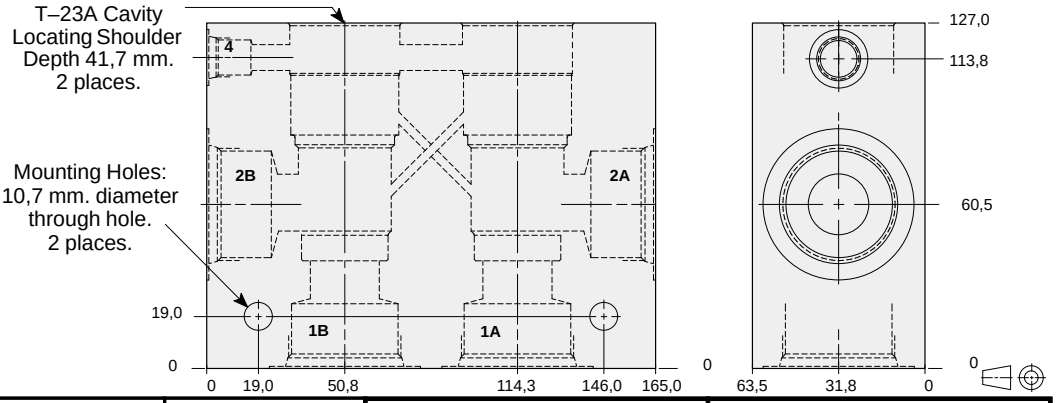

Ports 1A, 1B, 2A, & 2B	*Port 4*	ALUMINIUM		SG IRON	
		Model Code	*List Price*	*Model Code*	*List Price*
.75 NPTF	.25 NPTF	**XMD**		**XMD/S**	
1.00 NPTF	.25 NPTF	**XME**		**XME/S**	
1.25 NPTF	.25 NPTF	**XMF**		**XMF/S**	
SAE-12	SAE-6	**XML**		**XML/S**	
SAE-16	SAE-6	**XMM**		**XMM/S**	
SAE-20	SAE-6	**XMN**		**XMN/S**	
.75 BSPP	.25 BSPP	**XMW**		**XMW/S**	
1.00 BSPP	.25 BSPP	**XMX**		**XMX/S**	
1.25 BSPP	.25 BSPP	**XMY**		**XMY/S**	

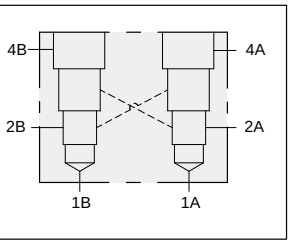

TYPICAL CARTRIDGES USED WITH THIS BODY

CWGA - *** Page 4.19
CWGG - *** Page 4.21
CVGV - *** Page 4.23

Instructions for ordering complete cartridge and body assemblies. Page iii

Pressure ratings, material specifications. Page 11.02

Two cavity 90 degree cross–piloted body with independent port 4 for load control applications.

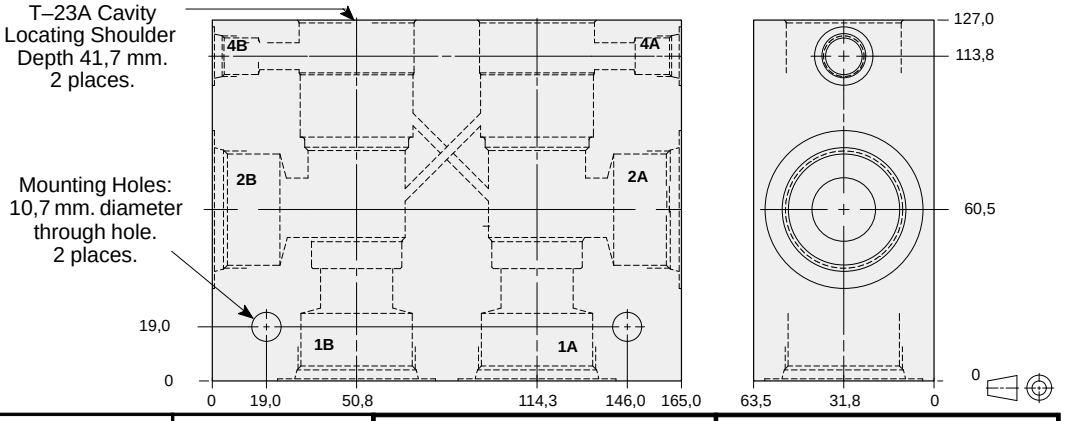

Ports 1A, 1B, 2A, & 2B	*Ports 4A & 4B*	ALUMINIUM		SG IRON	
		Model Code	*List Price*	*Model Code*	*List Price*
.75 NPTF	.25 NPTF	**VAD**		**VAD/S**	
1.00 NPTF	.25 NPTF	**VAE**		**VAE/S**	
1.25 NPTF	.25 NPTF	**VAF**		**VAF/S**	
SAE-12	SAE-6	**VAL**		**VAL/S**	
SAE-16	SAE-6	**VAM**		**VAM/S**	
SAE-20	SAE-6	**VAN**		**VAN/S**	
.75 BSPP	.25 BSPP	**VAW**		**VAW/S**	
1.00 BSPP	.25 BSPP	**VAX**		**VAX/S**	
1.25 BSPP	.25 BSPP	**VAY**		**VAY/S**	

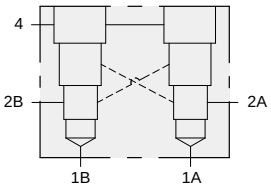

Two cavity cross–piloted 1.00” SAE Code 61 flange port body with common port 4 for load control applications.

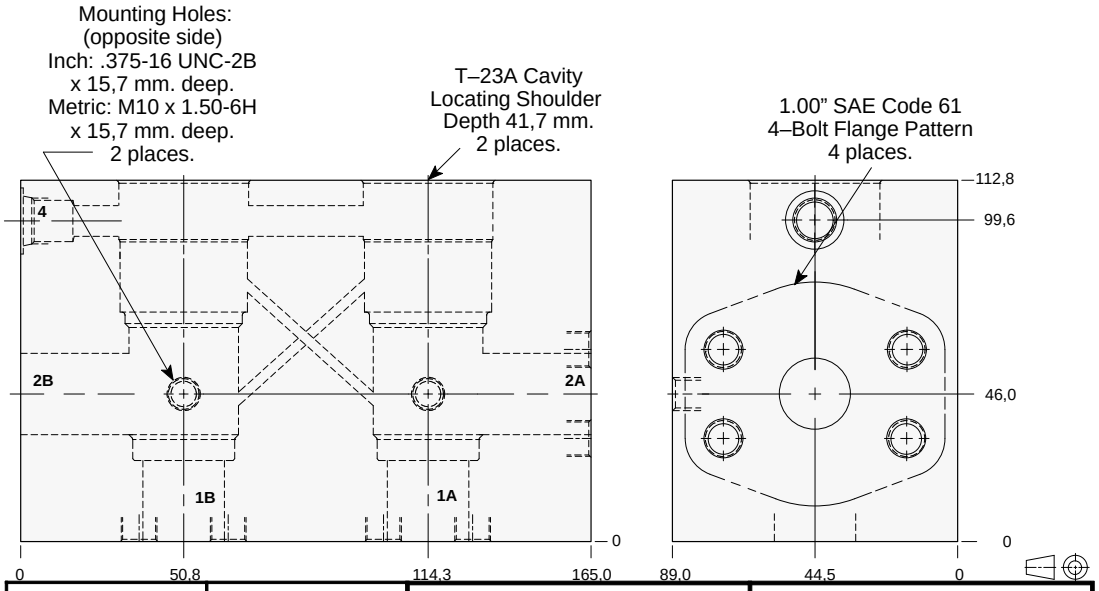

TYPICAL CARTRIDGES USED WITH THIS BODY

CWGA - *** Page 4.19
CWGG - *** Page 4.21
CVGV - *** Page 4.23

Instructions for ordering complete cartridge and body assemblies. Page iii

Pressure ratings, material specifications. Page 11.02

SAE Specifications. Page 11.03

Mounting Hole Dimensions	*Port 4*	ALUMINIUM		SG IRON	
		Model Code	*List Price*	*Model Code*	*List Price*
Inch	SAE-6	**XMP**		**XMP/S**	
Metric	.25 BSPP	**XMP/M**		**XMP/T**	

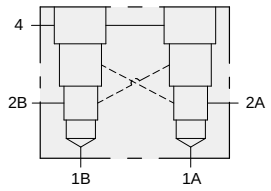

Two cavity cross–piloted 1.00” SAE Code 62 flange port body with common port 4 for load control applications.

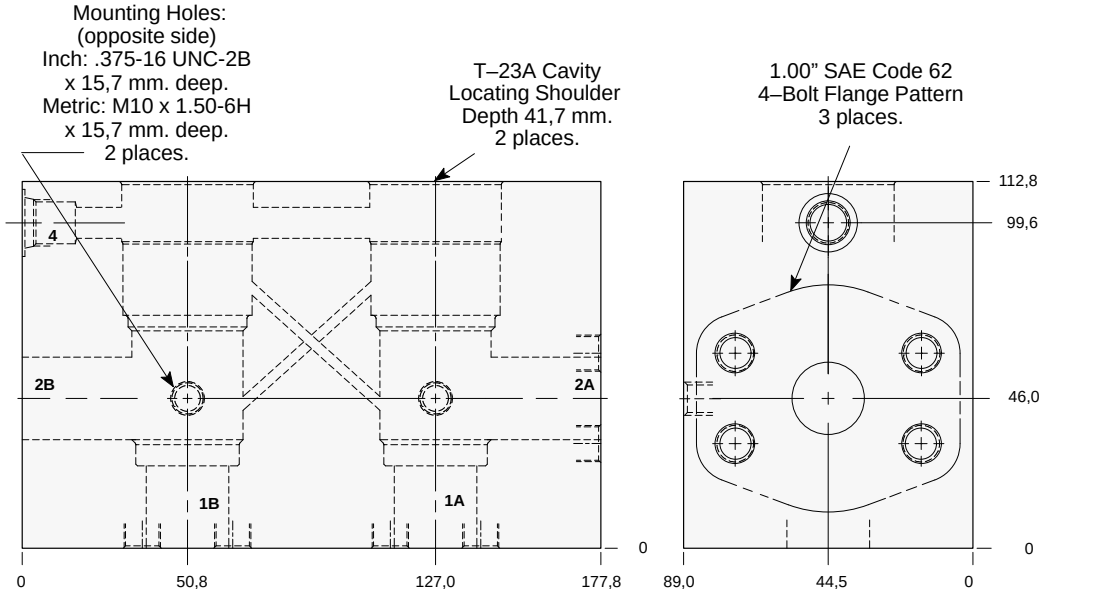

TYPICAL CARTRIDGES USED WITH THIS BODY

CWGA - *** Page 4.19
CWGG - *** Page 4.21
CVGV - *** Page 4.23

Instructions for ordering complete cartridge and body assemblies. Page iii

Pressure ratings, material specifications. Page 11.02

SAE Specifications. Page 11.03

Mounting Hole Dimensions	*Port 4*	ALUMINIUM		SG IRON	
		Model Code	*List Price*	*Model Code*	*List Price*
Inch	SAE-6	**XM4**		**XM4/S**	
Metric	.25 BSPP	**XM4/M**		**XM4/T**	

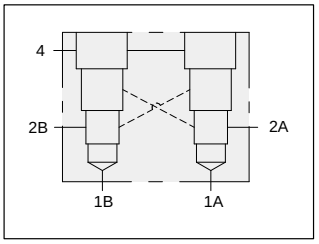

Two cavity cross–piloted 1.25” SAE Code 61 flange port body with common port 4 for load control applications.

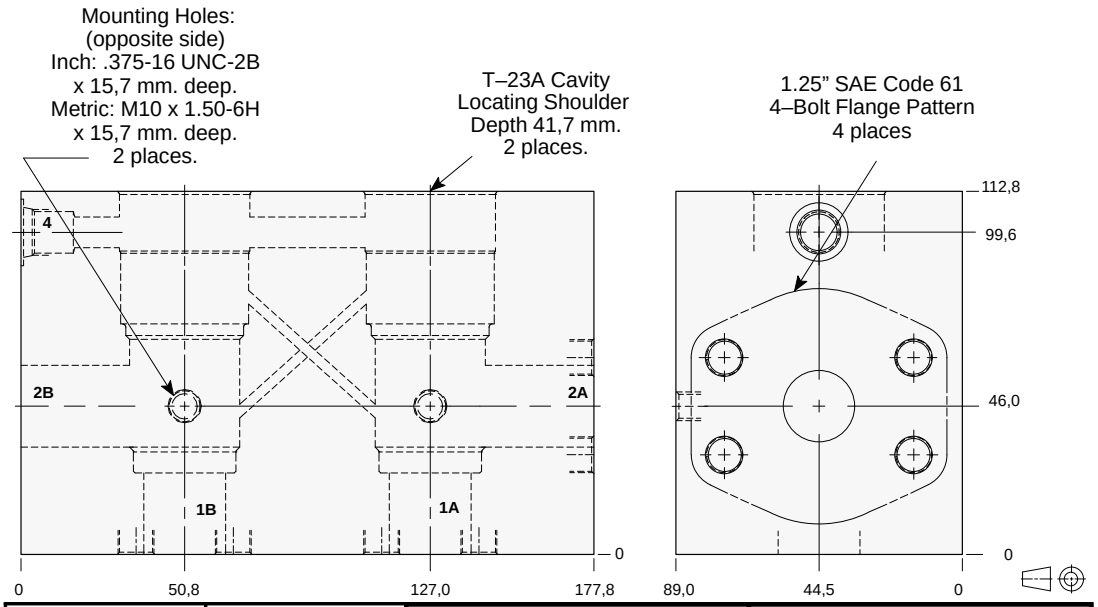

TYPICAL CARTRIDGES USED WITH THIS BODY

CWGA - *** Page 4.19
CWGG - *** Page 4.21
CVGV - *** Page 4.23

Instructions for ordering complete cartridge and body assemblies. Page iii

Pressure ratings, material specifications. Page 11.02

SAE Specifications. Page 11.03

Mounting Hole Dimensions	*Port 4*	ALUMINIUM		SG IRON	
		Model Code	*List Price*	*Model Code*	*List Price*
Inch	SAE-6	**XMQ**		**XMQ/S**	
Metric	.25 BSPP	**XMQ/M**		**XMQ/T**	

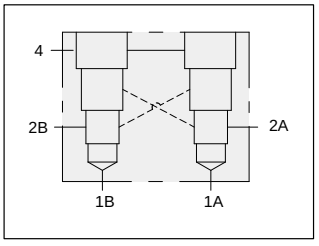

Two cavity cross–piloted 1.25” SAE Code 62 flange port body with common port 4 for load control applications.

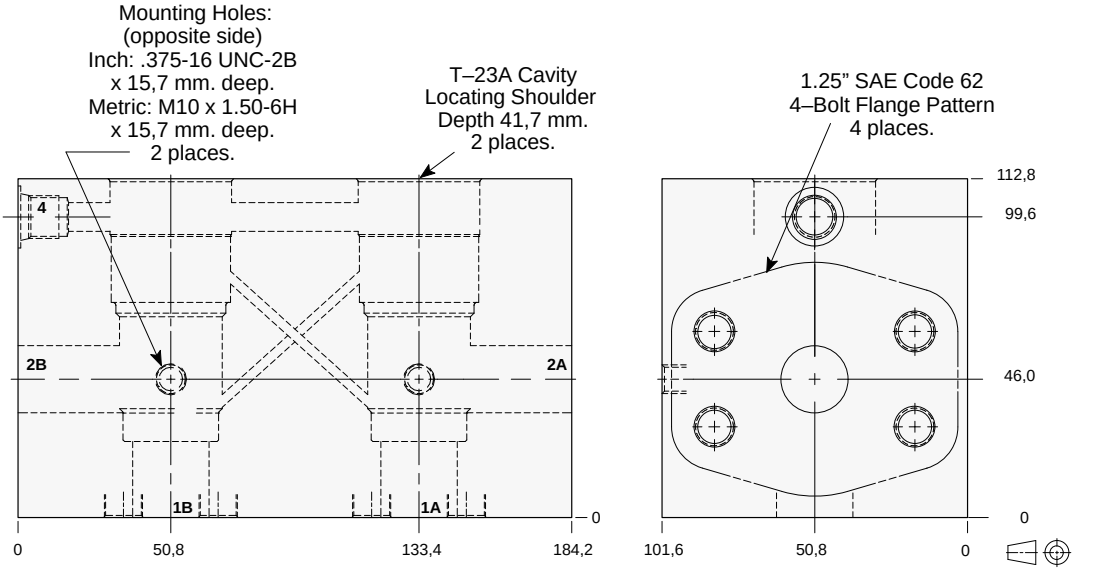

TYPICAL CARTRIDGES USED WITH THIS BODY

CWGA - *** Page 4.19
CWGG - *** Page 4.21
CVGV - *** Page 4.23

Instructions for ordering complete cartridge and body assemblies. Page iii

Pressure ratings, material specifications. Page 11.02

SAE Specifications. Page 11.03

Mounting Hole Dimensions	*Port 4*	ALUMINIUM		SG IRON	
		Model Code	*List Price*	*Model Code*	*List Price*
Inch	SAE-6	**XM5**		**XM5/S**	
Metric	.25 BSPP	**XM5/M**		**XM5/T**	

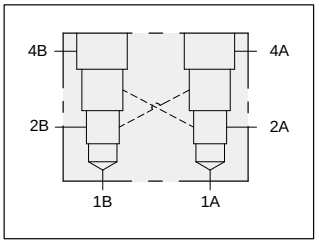

Two cavity cross–piloted 1.00” SAE Code 61 flange port body with independent port 4 for load control applications.

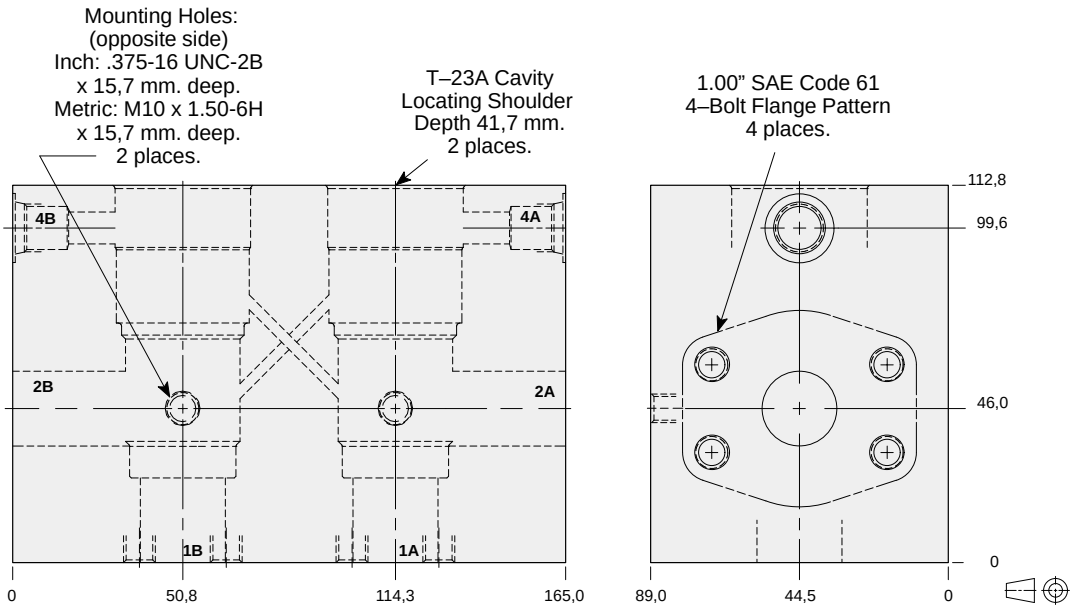

TYPICAL CARTRIDGES USED WITH THIS BODY

CWGA - *** Page 4.19
CWGG - *** Page 4.21
CVGV - *** Page 4.23

Instructions for ordering complete cartridge and body assemblies. Page iii

Pressure ratings, material specifications. Page 11.02

SAE Specifications. Page 11.03

Mounting Hole Dimensions	*Ports 4A & 4B*	ALUMINIUM		SG IRON	
		Model Code	*List Price*	*Model Code*	*List Price*
Inch	SAE-6	**VAP**		**VAP/S**	
Metric	.25 BSPP	**VAP/M**		**VAP/T**	

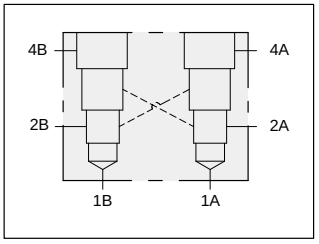

Two cavity cross–piloted 1.00” SAE Code 62 flange port body with independent port 4 for load control applications.

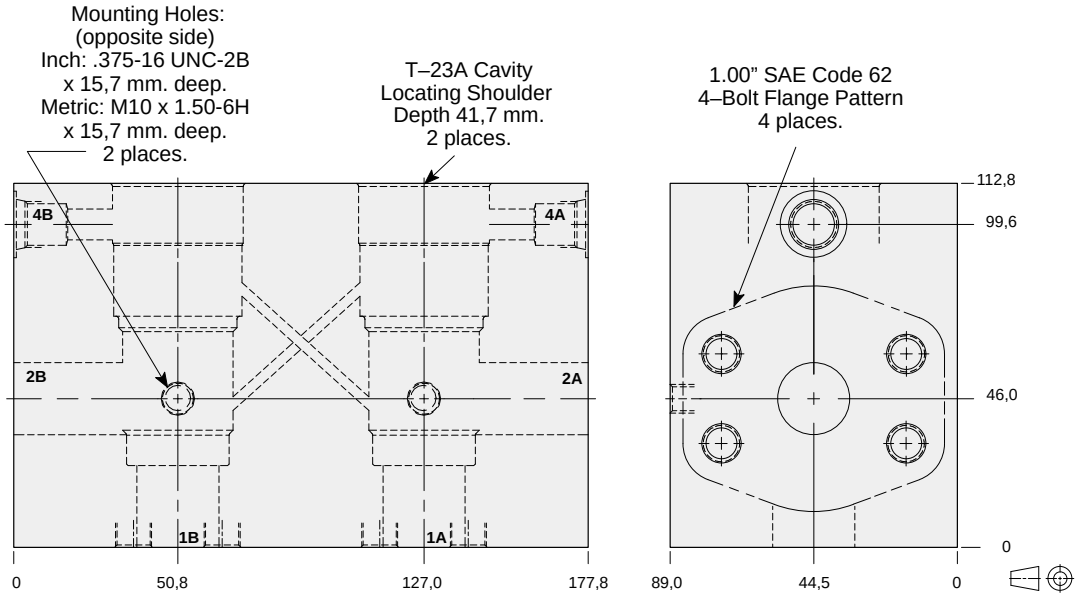

TYPICAL CARTRIDGES USED WITH THIS BODY

CWGA - *** Page 4.19
CWGG - *** Page 4.21
CVGV - *** Page 4.23

Instructions for ordering complete cartridge and body assemblies. Page iii

Pressure ratings, material specifications. Page 11.02

SAE Specifications. Page 11.03

Mounting Hole Dimensions	*Ports 4A & 4B*	ALUMINIUM		SG IRON	
		Model Code	*List Price*	*Model Code*	*List Price*
Inch	SAE-6	**VA4**		**VA4/S**	
Metric	.25 BSPP	**VA4/M**		**VA4/T**	

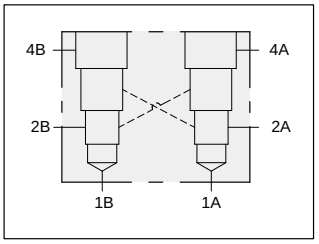

Two cavity cross–piloted 1.25” SAE Code 61 flange port body with independent port 4 for load control applications.

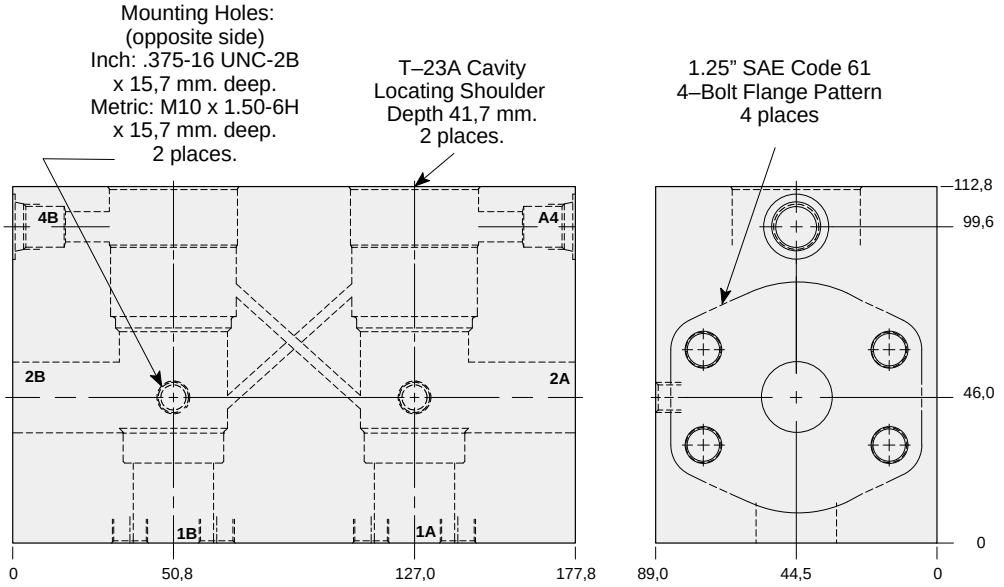

TYPICAL CARTRIDGES USED WITH THIS BODY

CWGA - *** Page 4.19
CWGG - *** Page 4.21
CVGV - *** Page 4.23

Instructions for ordering complete cartridge and body assemblies. Page iii

Pressure ratings, material specifications. Page 11.02

SAE Specifications. Page 11.03

Mounting Hole Dimensions	*Ports 4A & 4B*	ALUMINIUM		SG IRON	
		Model Code	*List Price*	*Model Code*	*List Price*
Inch	SAE-6	**VAQ**		**VAQ/S**	
Metric	.25 BSPP	**VAQ/M**		**VAQ/T**	

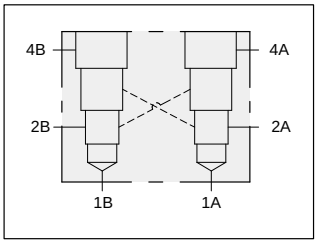

Two cavity cross–piloted 1.25” SAE Code 62 flange port body with independent port 4 for load control applications.

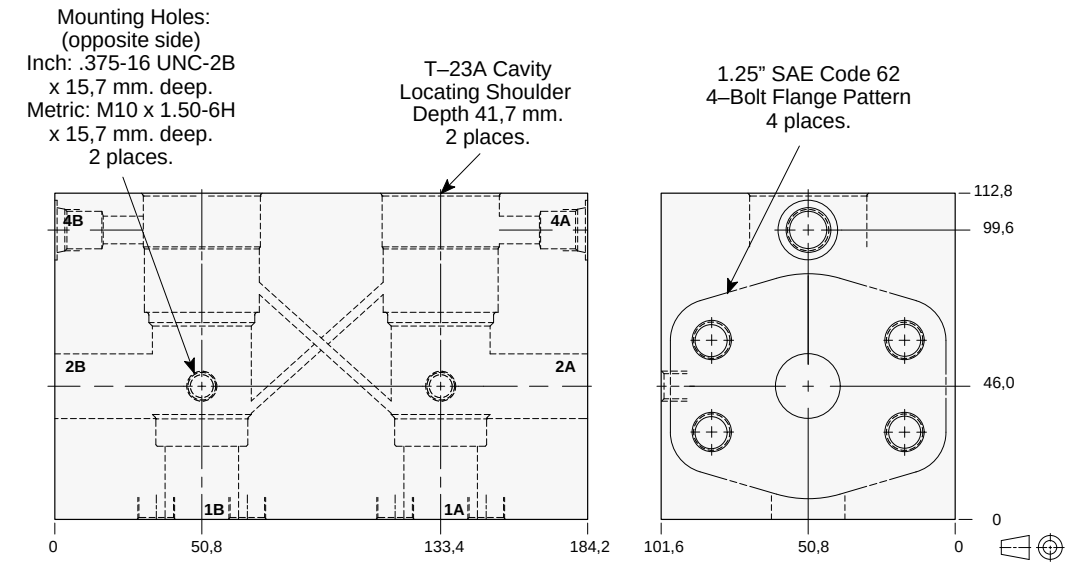

TYPICAL CARTRIDGES USED WITH THIS BODY

CWGA - *** Page 4.19
CWGG - *** Page 4.21
CVGV - *** Page 4.23

Instructions for ordering complete cartridge and body assemblies. Page iii

Pressure ratings, material specifications. Page 11.02

SAE Specifications. Page 11.03

Mounting Hole Dimensions	*Ports 4A & 4B*	ALUMINIUM		SG IRON	
		Model Code	*List Price*	*Model Code*	*List Price*
Inch	SAE-6	**VA5**		**VA5/S**	
Metric	.25 BSPP	**VA5/M**		**VA5/T**	

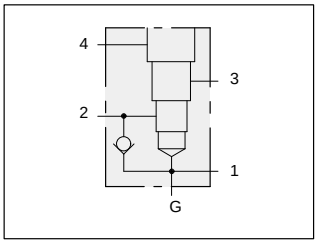

Body with reverse free flow check and gauge port for reducing/relieving applications.

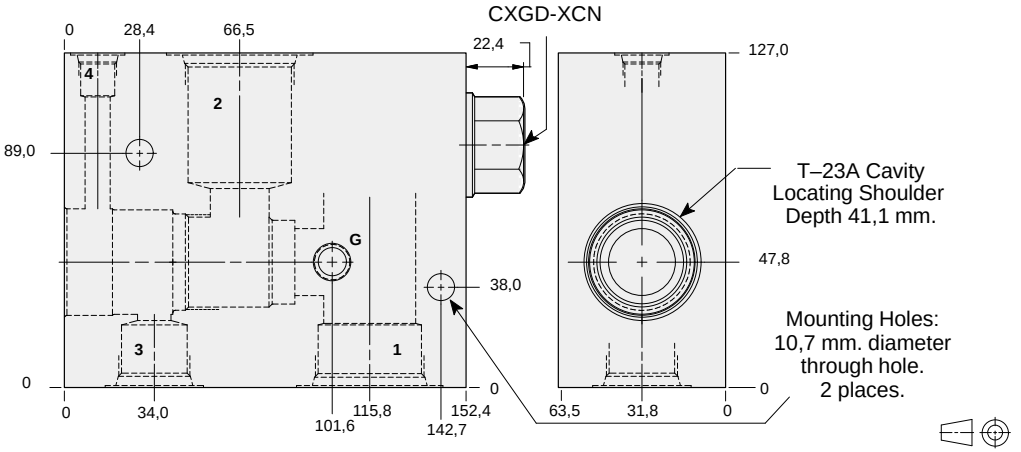

TYPICAL CARTRIDGES USED WITH THIS BODY

PVHA - *** Page 3.15
PVHB - *** Page 3.17

Cartridge seal type determines check valve seal type.

Instructions for ordering complete cartridge and body assemblies. Page viii

Pressure ratings, material specifications. Page 11.02

Ports 1 & 2	*Port 3*	*Port 4*	*Gauge Port*	ALUMINIUM		SG IRON	
				Model Code	*List Price*	*Model Code*	*List Price*
.75 NPTF	.75 NPTF	.25 NPTF	.25 NPTF	**P4D**		**P4D/S**	
1.00 NPTF	.75 NPTF	.25 NPTF	.25 NPTF	**P4E**		**P4E/S**	
1.25 NPTF	.75 NPTF	.25 NPTF	.25 NPTF	**P4F**		**P4F/S**	
SAE-12	SAE-12	SAE-6	.25 NPTF	**P4L**		**P4L/S**	
SAE-16	SAE-12	SAE-6	.25 NPTF	**P4M**		**P4M/S**	
SAE-20	SAE-12	SAE-6	.25 NPTF	**P4N**		**P4N/S**	
.75 BSPP	.75 BSPP	.25 BSPP	.25 BSPP	**P4W**		**P4W/S**	
1.00 BSPP	.75 BSPP	.25 BSPP	.25 BSPP	**P4X**		**P4X/S**	
1.25 BSPP	.75 BSPP	.25 BSPP	.25 BSPP	**P4Y**		**P4Y/S**	

LINE MOUNT BODIES

- Aluminium rated to 210 bar and SG Iron rated to 350 bar.

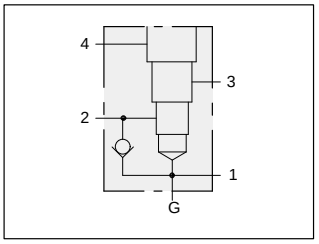

TYPICAL CARTRIDGES USED WITH THIS BODY

PVHA - *** Page 3.15
PVHB - *** Page 3.17

Cartridge seal type determines check valve seal type.

Instructions for ordering complete cartridge and body assemblies. Page viii

Pressure ratings, material specifications. Page 11.02

SAE Specifications. Page 11.03

1.00” SAE Code 61 flange port body with reverse free flow check and gauge port for reducing/relieving applications.

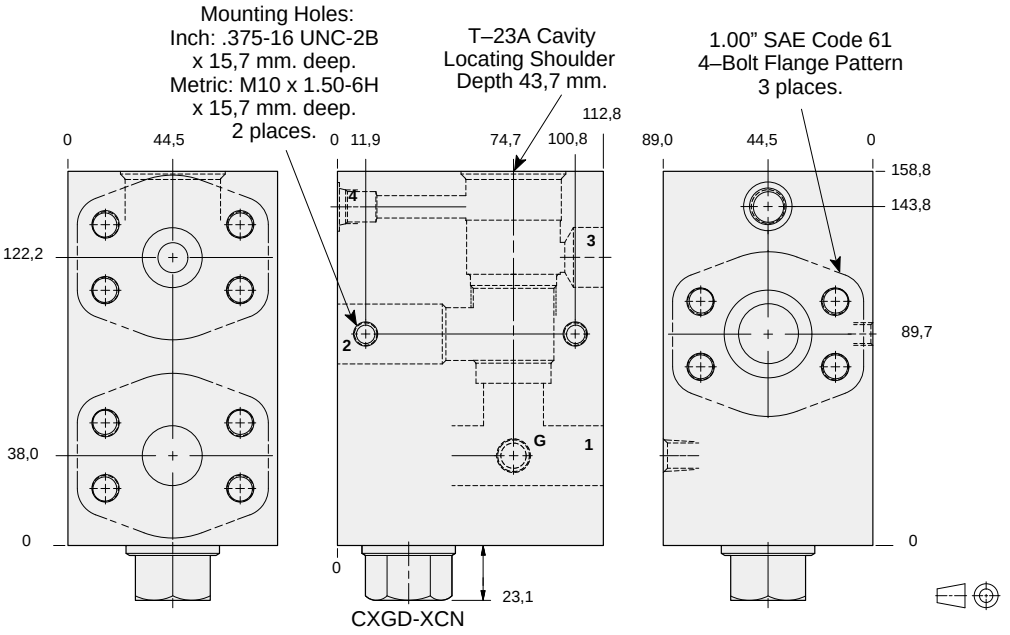

CXGD-XCN

Mounting Hole Dimensions	*Port 4*	*Gauge Port*	ALUMINIUM		SG IRON	
			Model Code	*List Price*	*Model Code*	*List Price*
Inch	SAE-6	.25 NPTF	**P4P**		**P4P/S**	
Metric	.25 BSPP	.25 BSPP	**P4P/M**		**P4P/T**	

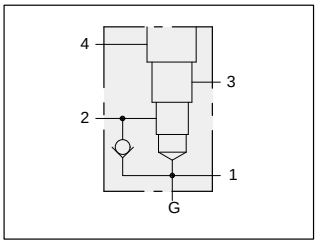

TYPICAL CARTRIDGES USED WITH THIS BODY

PVHA - *** Page 3.15
PVHB - *** Page 3.17

Cartridge seal type determines check valve seal type.

Instructions for ordering complete cartridge and body assemblies. Page viii

Pressure ratings, material specifications. Page 11.02

SAE Specifications. Page 11.03

1.00” SAE Code 62 flange port body with reverse free flow check and gauge port for reducing/relieving applications.

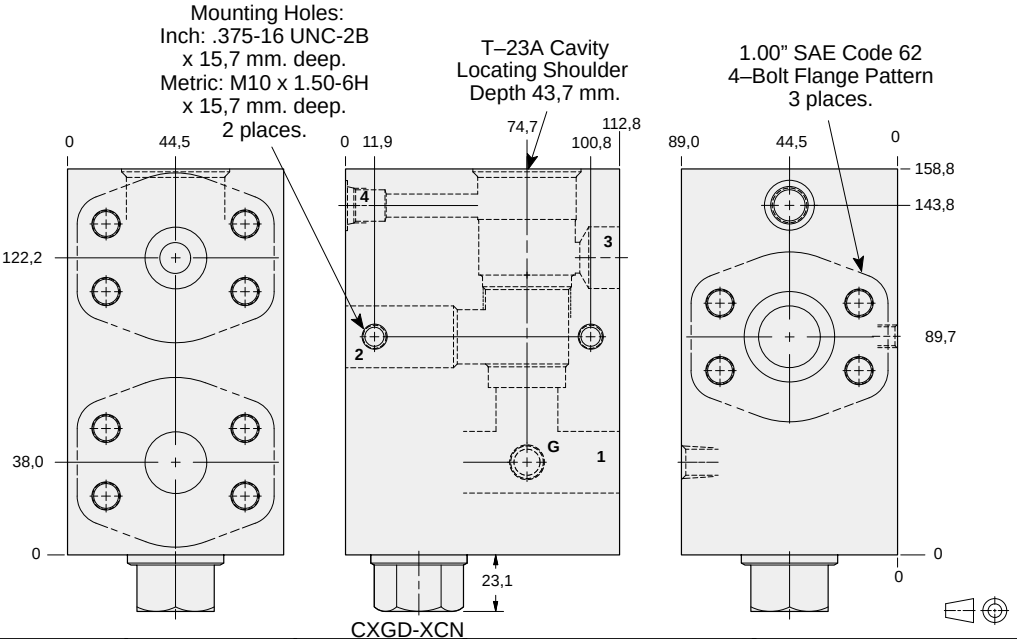

CXGD-XCN

Mounting Hole Dimensions	*Port 4*	*Gauge Port*	ALUMINIUM		SG IRON	
			Model Code	*List Price*	*Model Code*	*List Price*
Inch	SAE-6	.25 NPTF	**P44**		**P44/S**	
Metric	.25 BSPP	.25 BSPP	**P44/M**		**P44/T**	

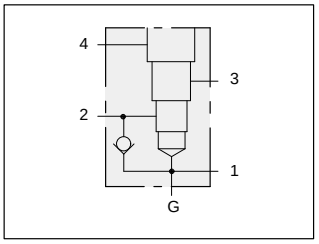

TYPICAL CARTRIDGES USED WITH THIS BODY

PVHA - *** Page 3.15
PVHB - *** Page 3.17

Cartridge seal type determines check valve seal type.

Instructions for ordering complete cartridge and body assemblies. Page viii

Pressure ratings, material specifications. Page 11.02

SAE Specifications. Page 11.03

1.25” SAE Code 61 flange port body with reverse free flow check and gauge port for reducing/relieving applications.

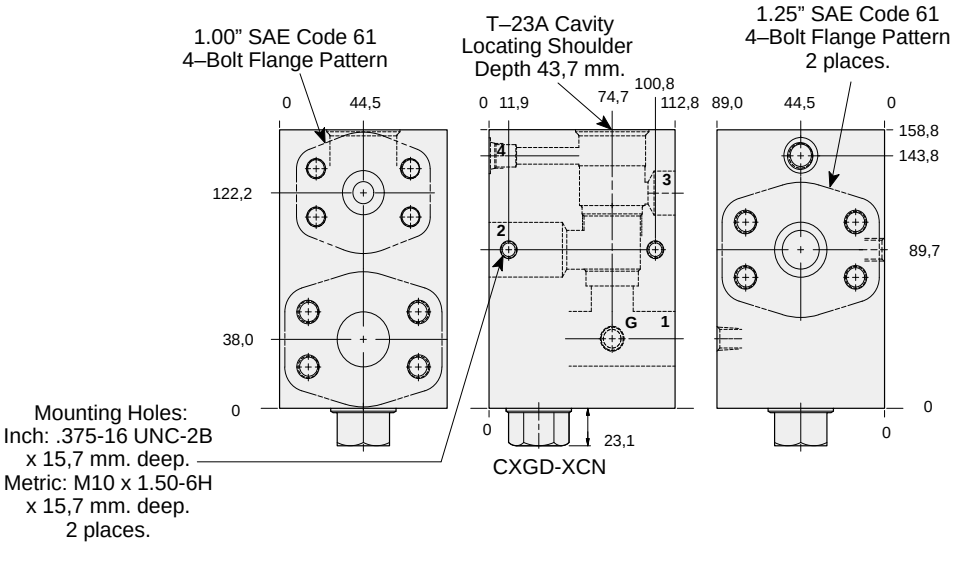

Mounting Hole Dimensions	Port 3 SAE Code 61	Port 4	Gauge Port	ALUMINIUM		SG IRON	
				Model Code	List Price	Model Code	List Price
Inch	1.00”	SAE-6	.25 NPTF	**P4Q**		**P4Q/S**	
Metric	1.00”	.25 BSPP	.25 BSPP	**P4Q/M**		**P4Q/T**	

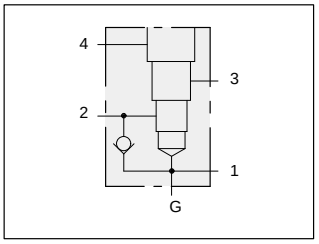

TYPICAL CARTRIDGES USED WITH THIS BODY

PVHA - *** Page 3.15
PVHB - *** Page 3.17

Cartridge seal type determines check valve seal type.

Instructions for ordering complete cartridge and body assemblies. Page viii

Pressure ratings, material specifications. Page 11.02

SAE Specifications. Page 11.03

1.25” SAE Code 62 flange port body with reverse free flow check and gauge port for reducing/relieving applications.

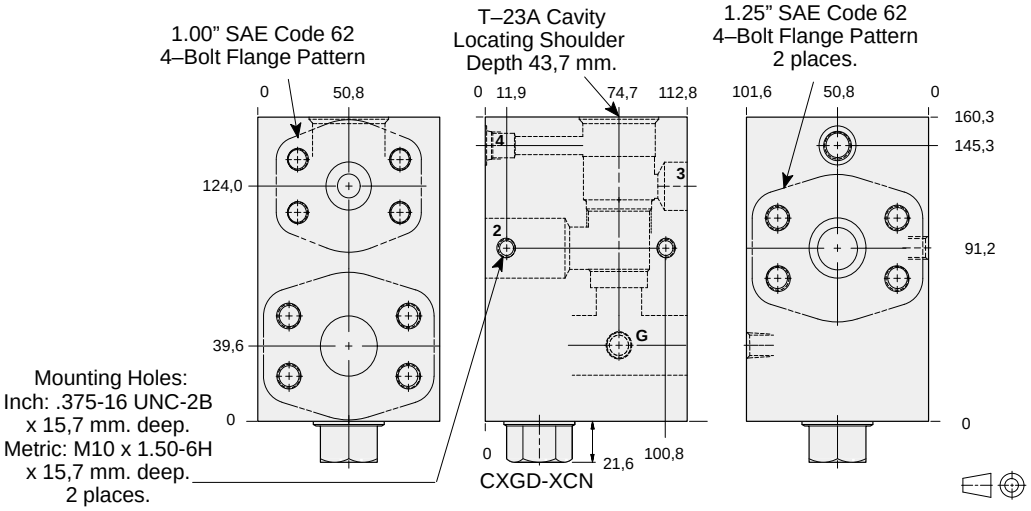

Mounting Hole Dimensions	Port 3 SAE Code 62	Port 4	Gauge Port	ALUMINIUM		SG IRON	
				Model Code	List Price	Model Code	List Price
Inch	1.00”	SAE-6	.25 NPTF	**P45**		**P45/S**	
Metric	1.00”	.25 BSPP	.25 BSPP	**P45/M**		**P45/T**	

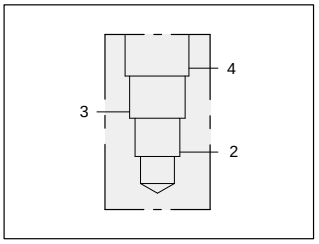

TYPICAL CARTRIDGES USED WITH THIS BODY

FSED	- ***	Page	7.09
FSEA	- ***	Page	7.11
FSES	- ***	Page	7.13
FSEH	- ***	Page	7.15
DSGH	- ***	Page	10.07

Instructions for ordering complete cartridge and body assemblies. Page viii

Pressure ratings, material specifications. Page 11.02

Body for flow divider/combiner applications.

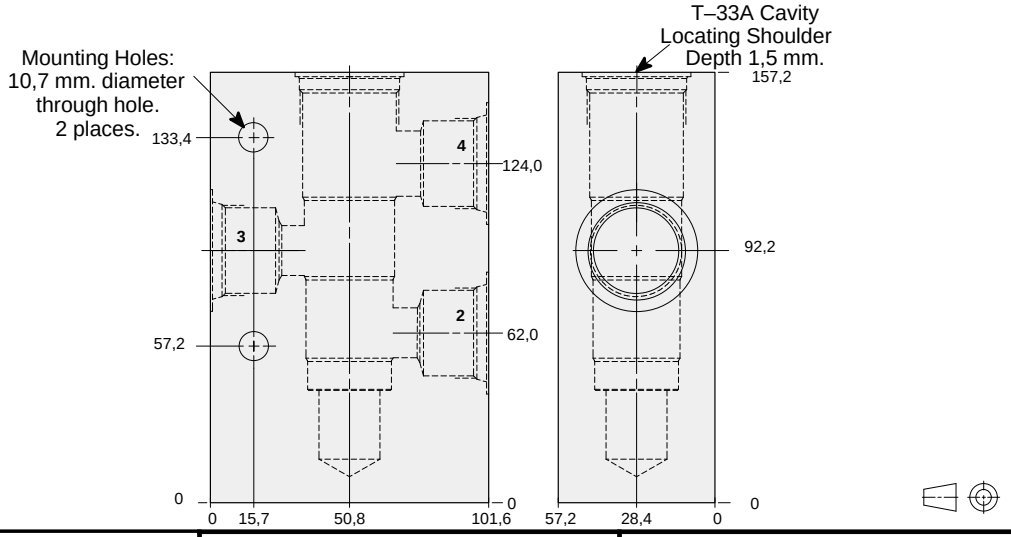

Ports 2, 3 & 4	ALUMINIUM		SG IRON	
	Model Code	List Price	Model Code	List Price
.75 NPTF	**PMD**		**PMD/S**	
1.00 NPTF	**PME**		**PME/S**	
SAE-12	**PML**		**PML/S**	
SAE-16	**PMM**		**PMM/S**	
.75 BSPP	**PMW**		**PMW/S**	
1.00 BSPP	**PMX**		**PMX/S**	

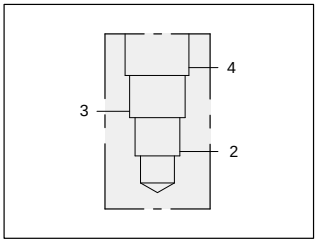

TYPICAL CARTRIDGES USED WITH THIS BODY

FSED	- ***	Page	7.09
FSEA	- ***	Page	7.11
FSES	- ***	Page	7.13
FSEH	- ***	Page	7.15
DSGH	- ***	Page	10.07

Instructions for ordering complete cartridge and body assemblies. Page viii

Pressure ratings, material specifications. Page 11.02

Body for flow divider/combiner applications.

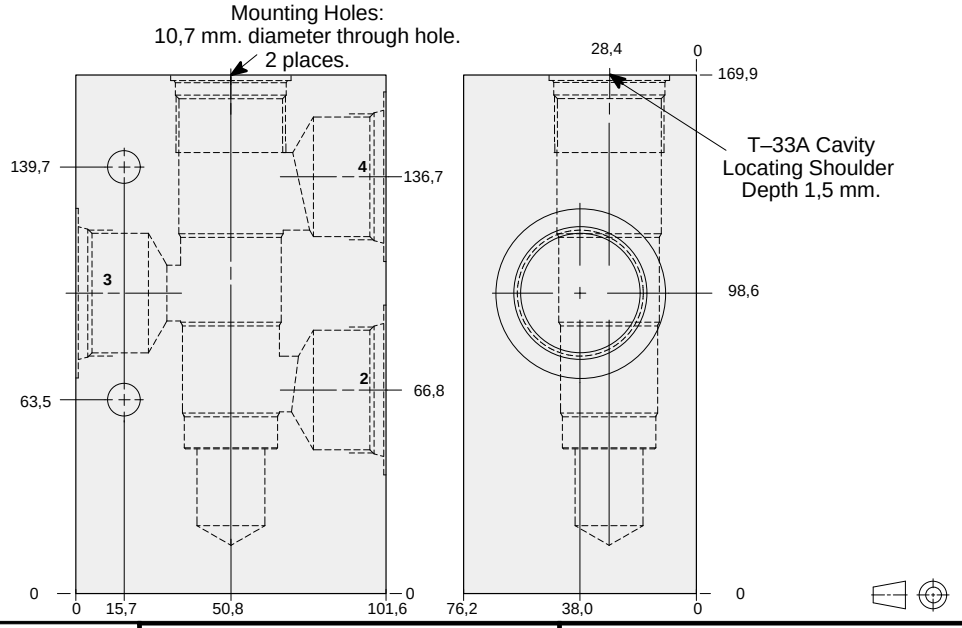

Ports 2, 3 & 4	ALUMINIUM		SG IRON	
	Model Code	List Price	Model Code	List Price
1.25 NPTF	**PMF**		**PMF/S**	
SAE-20	**PMN**		**PMN/S**	
1.25 BSPP	**PMY**		**PMY/S**	

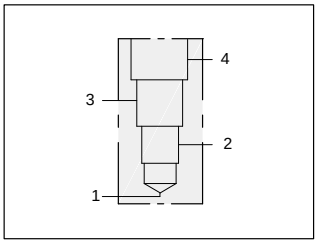

TYPICAL CARTRIDGES USED WITH THIS BODY

Instructions for ordering complete cartridge and body assemblies. Page viii

Pressure ratings, material specifications. Page 11.02

Four port body.

Mounting Holes:
10,7 mm. diameter through hole.
2 places.

T–33A Cavity
Locating Shoulder
Depth 1,5 mm.

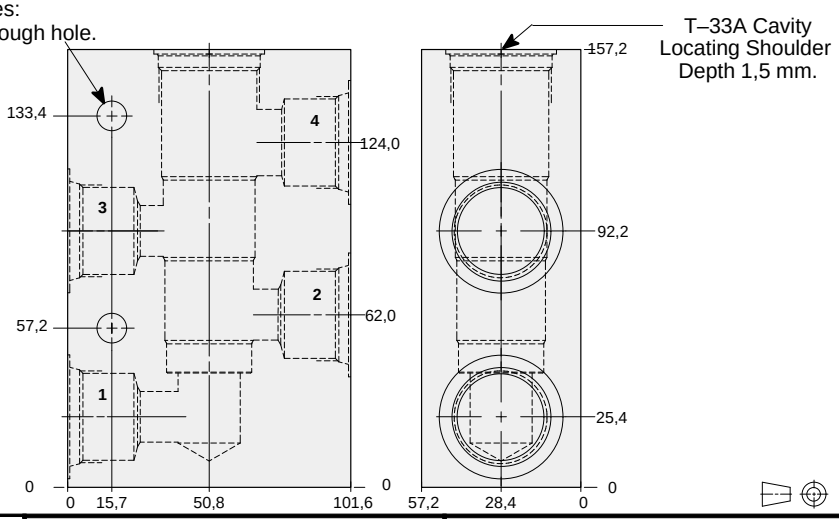

Ports 1 & 2, 3 & 4	ALUMINIUM		SG IRON	
	Model Code	*List Price*	*Model Code*	*List Price*
.75 NPTF	**PND**		**PND/S**	
1.00 NPTF	**PNE**		**PNE/S**	
SAE-12	**PNL**		**PNL/S**	
SAE-16	**PNM**		**PNM/S**	
.75 BSPP	**PNW**		**PNW/S**	
1.00 BSPP	**PNX**		**PNX/S**	

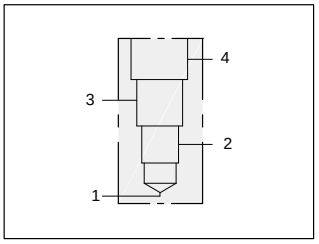

TYPICAL CARTRIDGES USED WITH THIS BODY

Instructions for ordering complete cartridge and body assemblies. Page viii

Pressure ratings, material specifications. Page 11.02

Four port body.

Mounting Holes:
10,7 mm. diameter through hole.
2 places.

T–33A Cavity
Locating Shoulder
Depth 1,5 mm.

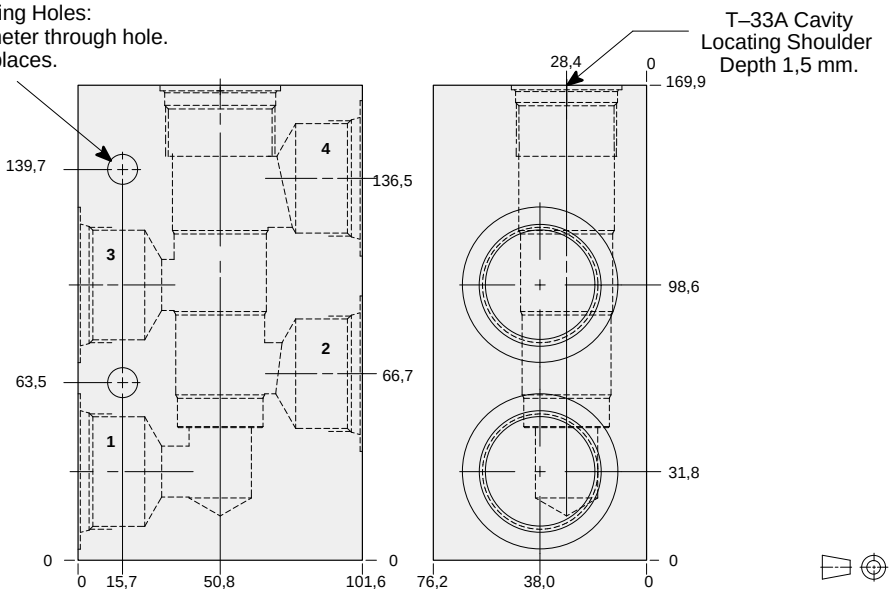

Ports 1 & 2, 3 & 4	ALUMINIUM		SG IRON	
	Model Code	*List Price*	*Model Code*	*List Price*
1.25 NPTF	**PNF**		**PNF/S**	
SAE-20	**PNN**		**PNN/S**	
1.25 BSPP	**PNY**		**PNY/S**	

LINE MOUNT BODIES

- Aluminium rated to 210 bar and SG Iron rated to 350 bar.

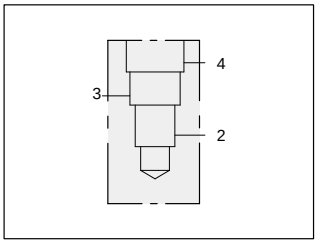

TYPICAL CARTRIDGES USED WITH THIS BODY

FSED	- ***	Page	7.09
FSEA	- ***	Page	7.11
FSES	- ***	Page	7.13
FSEH	- ***	Page	7.15
DSGH	- ***	Page	10.07

Instructions for ordering complete cartridge and body assemblies. Page viii

Pressure ratings, material specifications. Page 11.02

SAE Specifications. Page 11.03

1.00” SAE Code 61 flange port body for flow divider/combiner applications.

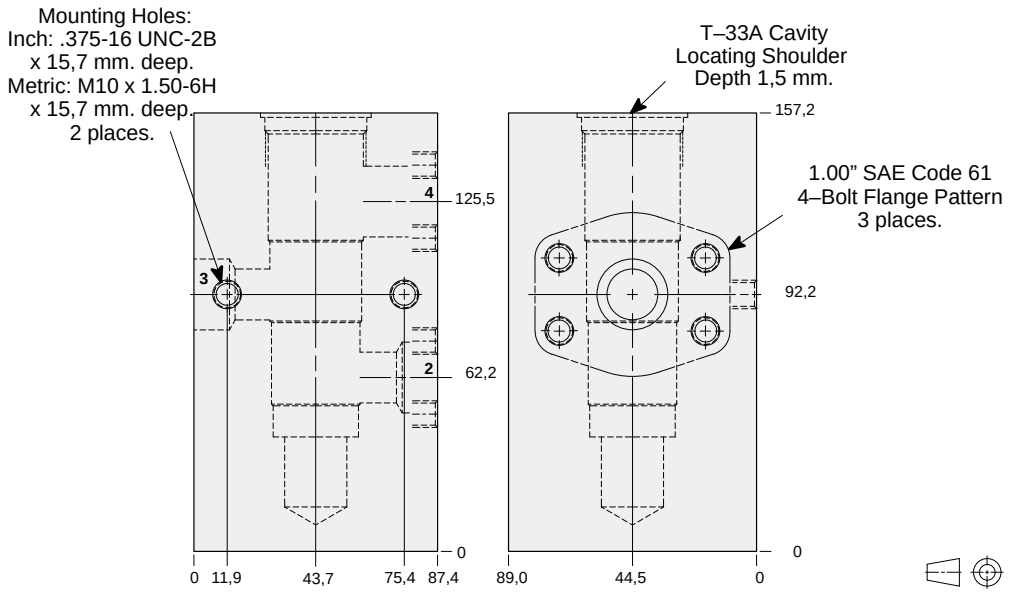

Mounting Hole Dimensions	ALUMINIUM		SG IRON	
	Model Code	*List Price*	*Model Code*	*List Price*
Inch	**PMP**		**PMP/S**	
Metric	**PMP/M**		**PMP/T**	

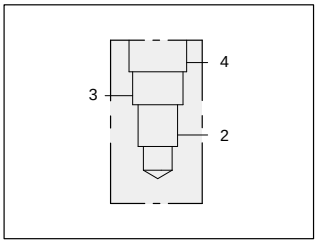

TYPICAL CARTRIDGES USED WITH THIS BODY

FSED	- ***	Page	7.09
FSEA	- ***	Page	7.11
FSES	- ***	Page	7.13
FSEH	- ***	Page	7.15
DSGH	- ***	Page	10.07

Instructions for ordering complete cartridge and body assemblies. Page viii

Pressure ratings, material specifications. Page 11.02

SAE Specifications. Page 11.03

1.00” SAE Code 62 flange port body for flow divider/combiner applications.

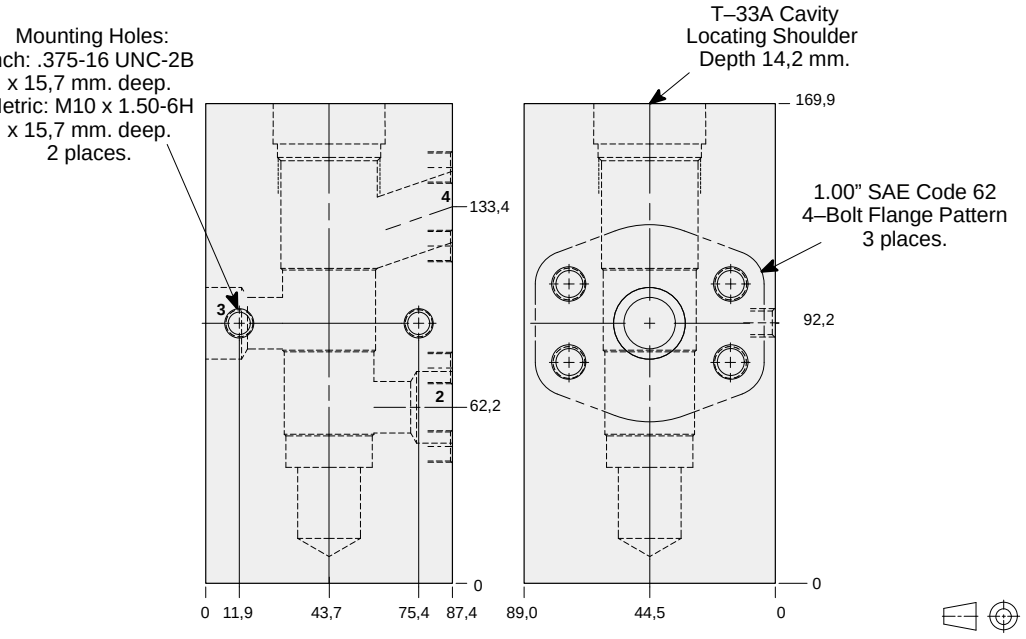

Mounting Hole Dimensions	ALUMINIUM		SG IRON	
	Model Code	*List Price*	*Model Code*	*List Price*
Inch	**PM4**		**PM4/S**	
Metric	**PM4/M**		**PM4/T**	

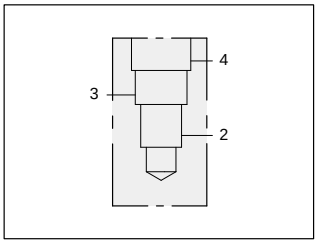

TYPICAL CARTRIDGES USED WITH THIS BODY

FSED	- ***	Page	7.09
FSEA	- ***	Page	7.11
FSES	- ***	Page	7.13
FSEH	- ***	Page	7.15
DSGH	- ***	Page	10.07

Instructions for ordering complete cartridge and body assemblies. Page viii

Pressure ratings, material specifications. Page 11.02

SAE Specifications. Page 11.03

1.25” SAE Code 61 flange port body for flow divider/combiner applications.

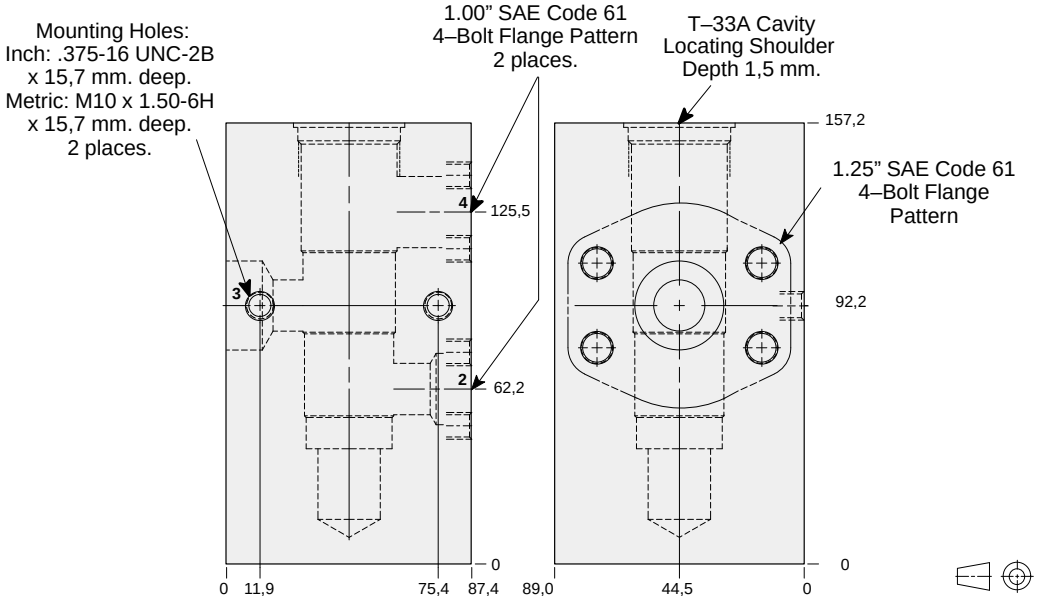

Mounting Hole Dimensions	*Ports 2 & 4 SAE Code 61*	ALUMINIUM		SG IRON	
		Model Code	*List Price*	*Model Code*	*List Price*
Inch	1.00”	**PMQ**		**PMQ/S**	
Metric	1.00”	**PMQM**		**PMQ/T**	

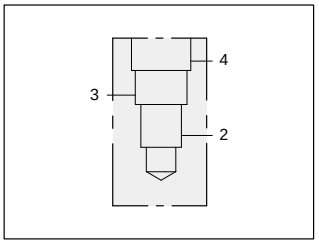

TYPICAL CARTRIDGES USED WITH THIS BODY

FSED	- ***	Page	7.09
FSEA	- ***	Page	7.11
FSES	- ***	Page	7.13
FSEH	- ***	Page	7.15
DSGH	- ***	Page	10.07

Instructions for ordering complete cartridge and body assemblies. Page viii

Pressure ratings, material specifications. Page 11.02

SAE Specifications. Page 11.03

1.25” SAE Code 62 flange port body for flow divider/combiner applications.

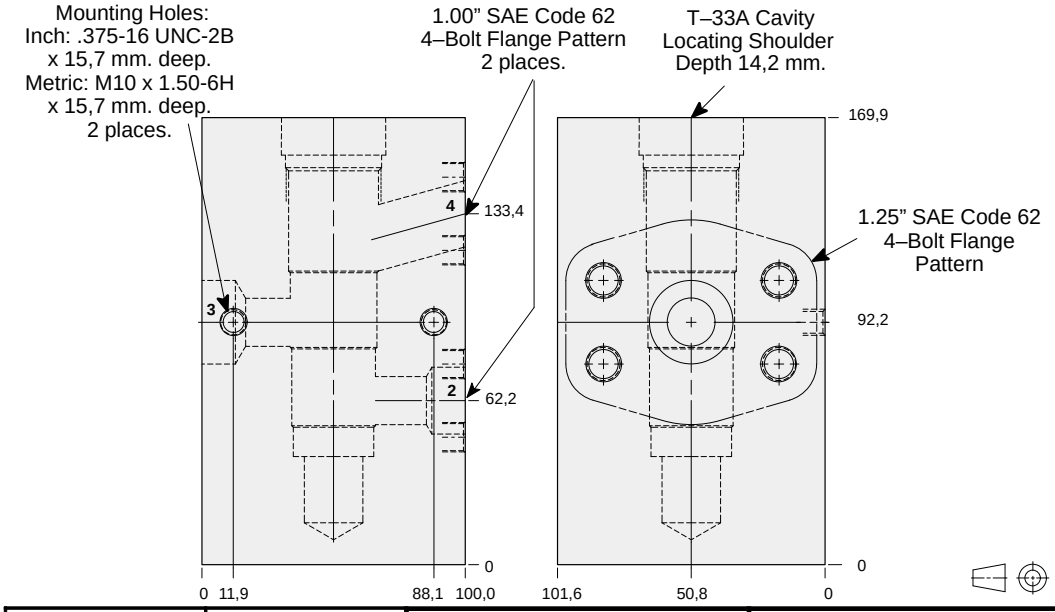

Mounting Hole Dimensions	*Ports 2 & 4 SAE Code 62*	ALUMINIUM		SG IRON	
		Model Code	*List Price*	*Model Code*	*List Price*
Inch	1.00”	**PM5**		**PM5/S**	
Metric	1.00”	**PM5/M**		**PM5/T**	

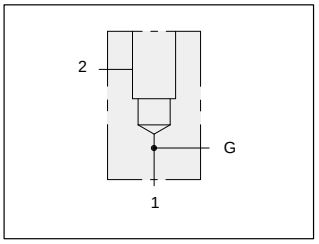

90 degree body with gauge port.

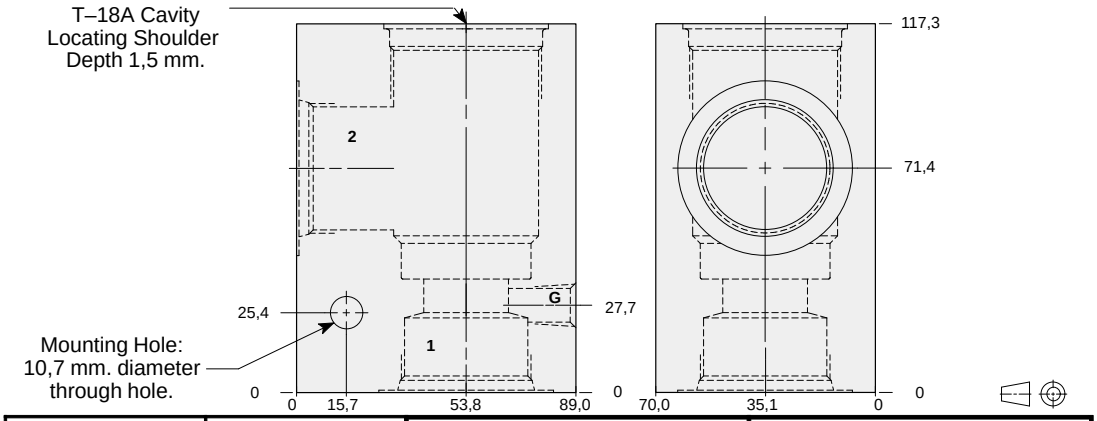

Ports 1 & 2	*Gauge Port*	ALUMINIUM		SG IRON	
		Model Code	*List Price*	*Model Code*	*List Price*
.75 NPTF	.25 NPTF	**LAD**		**LAD/S**	
1.00 NPTF	.25 NPTF	**LAE**		**LAE/S**	
1.25 NPTF	.25 NPTF	**LAF**		**LAF/S**	
SAE-12	.25 NPTF	**LAL**		**LAL/S**	
SAE-16	.25 NPTF	**LAM**		**LAM/S**	
SAE-20	.25 NPTF	**LAN**		**LAN/S**	
.75 BSPP	.25 BSPP	**LAW**		**LAW/S**	
1.00 BSPP	.25 BSPP	**LAX**		**LAX/S**	
1.25 BSPP	.25 BSPP	**LAY**		**LAY/S**	

TYPICAL CARTRIDGES USED WITH THIS BODY

RPKC - *** Page 1.07
RPKE - *** Page 1.09
RDJA - *** Page 1.11
RQKB - *** Page 1.13
RPKD - *** Page 1.15
CXJA - *** Page 5.09
CXID - *** Page 5.11
NFFC - *** Page 5.13
CNIC - *** Page 5.15
NCGB - *** Page 5.17
NCGC - *** Page 5.19
FXFA - *** Page 5.21
FCFB - *** Page 5.23
FDFA - *** Page 5.25
FQIA - *** Page 10.15

Instructions for ordering complete cartridge and body assemblies. Page viii

Pressure ratings, material specifications. Page 11.02

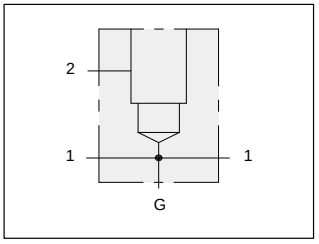

Through port body with gauge port.

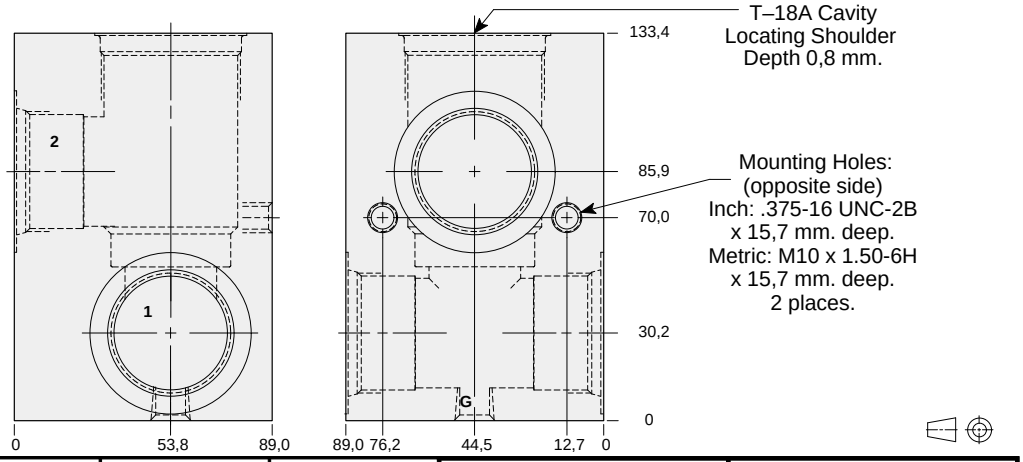

Mounting Hole Dimensions	*Ports 1 & 2*	*Gauge Port*	ALUMINIUM		SG IRON	
			Model Code	*List Price*	*Model Code*	*List Price*
Inch	.75 NPTF	.25 NPTF	**LED**		**LED/S**	
Inch	1.00 NPTF	.25 NPTF	**LEE**		**LEE/S**	
Inch	1.25 NPTF	.25 NPTF	**LEF**		**LEF/S**	
Inch	SAE-12	.25 NPTF	**LEL**		**LEL/S**	
Inch	SAE-16	.25 NPTF	**LEM**		**LEM/S**	
Inch	SAE-20	.25 NPTF	**LEN**		**LEN/S**	
Metric	.75 BSPP	.25 BSPP	**LEW**		**LEW/S**	
Metric	1.00 BSPP	.25 BSPP	**LEX**		**LEX/S**	
Metric	1.25 BSPP	.25 BSPP	**LEY**		**LEY/S**	

TYPICAL CARTRIDGES USED WITH THIS BODY

RPKC - *** Page 1.07
RPKE - *** Page 1.09
RDJA - *** Page 1.11
RQKB - *** Page 1.13
RPKD - *** Page 1.15
NFFC - *** Page 5.13
CNIC - *** Page 5.15
NCGB - *** Page 5.17
NCGC - *** Page 5.19
FXFA - *** Page 5.21
FCFB - *** Page 5.23
FDFA - *** Page 5.25

Instructions for ordering complete cartridge and body assemblies. Page viii

Pressure ratings, material specifications. Page 11.02

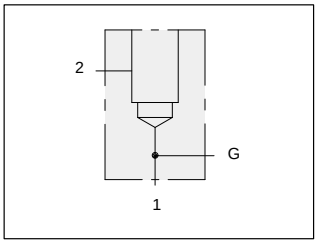

90 degree 1.00” SAE Code 61 flange port body with gauge port.

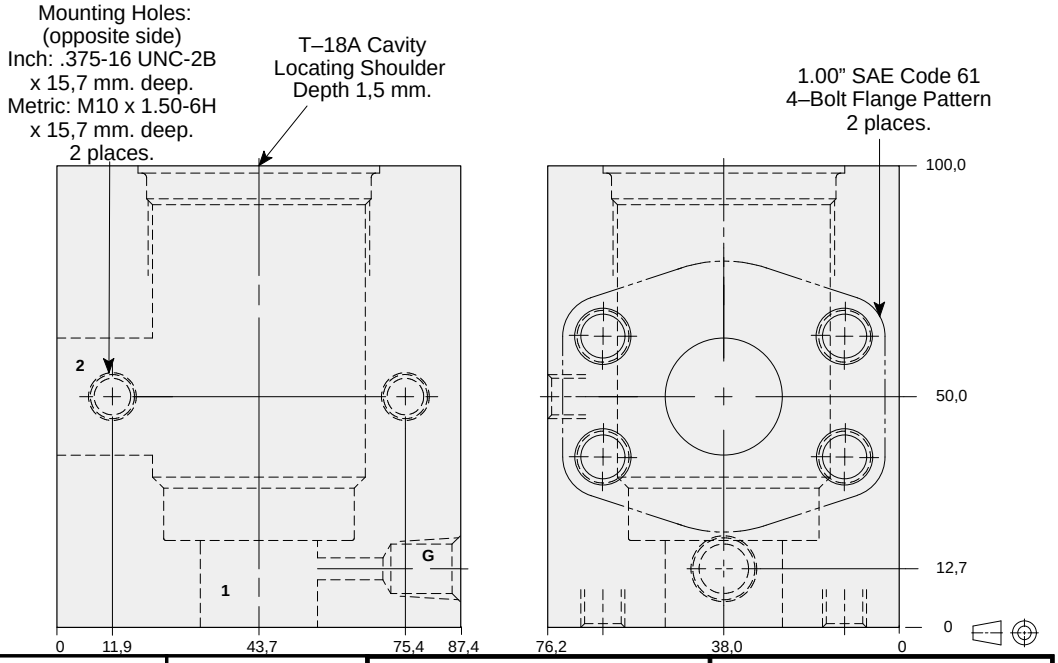

Mounting Hole Dimensions	*Gauge Port*	ALUMINIUM		SG IRON	
		Model Code	*List Price*	*Model Code*	*List Price*
Inch	.25 NPTF	**LAP**		**LAP/S**	
Metric	.25 BSPP	**LAP/M**		**LAP/T**	

TYPICAL CARTRIDGES USED WITH THIS BODY

RPKC	- ***	Page	1.07
RPKE	- ***	Page	1.09
RDJA	- ***	Page	1.11
RQKB	- ***	Page	1.13
RPKD	- ***	Page	1.15
CXJA	- ***	Page	5.09
CXID	- ***	Page	5.11
NFFC	- ***	Page	5.13
CNIC	- ***	Page	5.15
NCGB	- ***	Page	5.17
NCGC	- ***	Page	5.19
FXFA	- ***	Page	5.21
FCFB	- ***	Page	5.23
FDFA	- ***	Page	5.25
FQIA	- ***	Page	10.15

Instructions for ordering complete cartridge and body assemblies. Page viii

Pressure ratings, material specifications. Page 11.02

SAE Specifications. Page 11.03

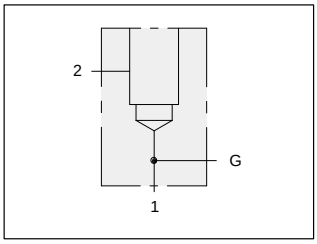

90 degree 1.00” SAE Code 62 flange port body with gauge port.

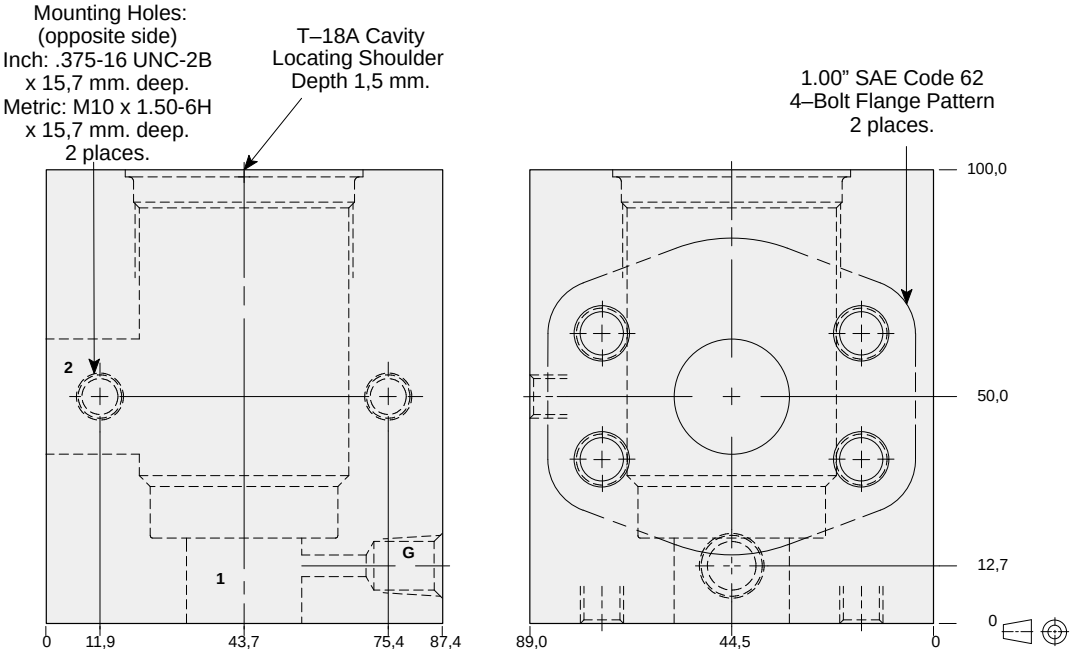

Mounting Hole Dimensions	*Gauge Port*	ALUMINIUM		SG IRON	
		Model Code	*List Price*	*Model Code*	*List Price*
Inch	.25 NPTF	**LA4**		**LA4/S**	
Metric	.25 BSPP	**LA4/M**		**LA4/T**	

TYPICAL CARTRIDGES USED WITH THIS BODY

RPKC	- ***	Page	1.07
RPKE	- ***	Page	1.09
RDJA	- ***	Page	1.11
RQKB	- ***	Page	1.13
RPKD	- ***	Page	1.15
CXJA	- ***	Page	5.09
CXID	- ***	Page	5.11
NFFC	- ***	Page	5.13
CNIC	- ***	Page	5.15
NCGB	- ***	Page	5.17
NCGC	- ***	Page	5.19
FXFA	- ***	Page	5.21
FCFB	- ***	Page	5.23
FDFA	- ***	Page	5.25
FQIA	- ***	Page	10.15

Instructions for ordering complete cartridge and body assemblies. Page viii

Pressure ratings, material specifications. Page 11.02

SAE Specifications. Page 11.03

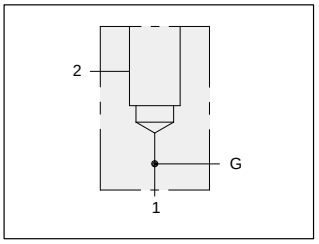

90 degree 1.25” SAE Code 61 flange port body with gauge port.

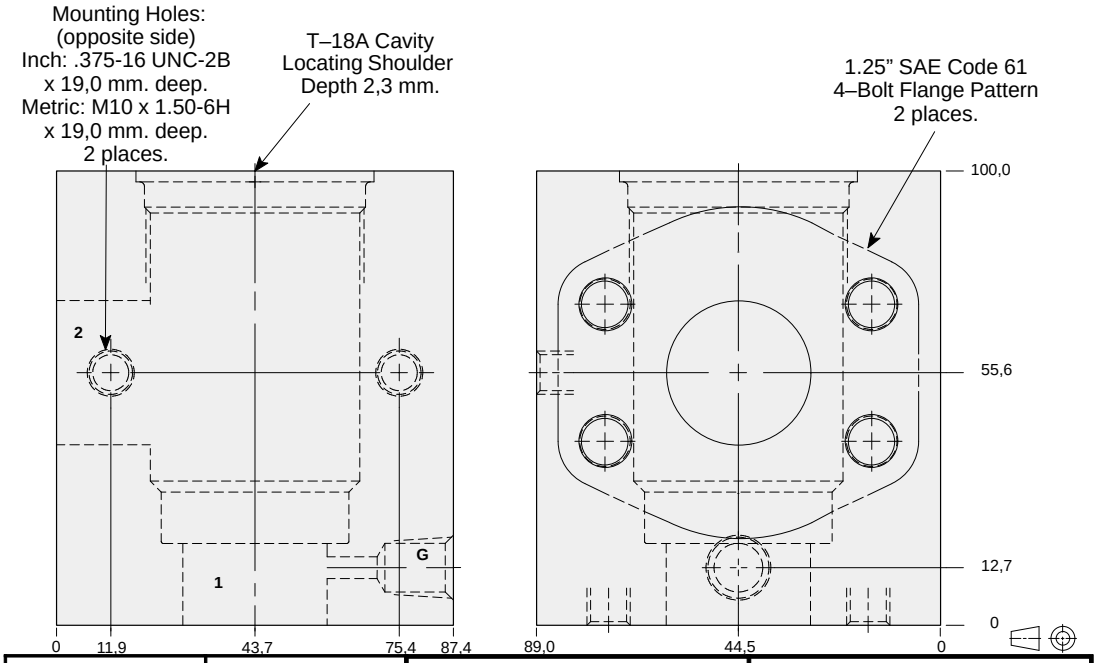

TYPICAL CARTRIDGES USED WITH THIS BODY

RPKC - ***	Page	1.07
RPKE - ***	Page	1.09
RDJA - ***	Page	1.11
RQKB - ***	Page	1.13
RPKD - ***	Page	1.15
CXJA - ***	Page	5.09
CXID - ***	Page	5.11
NFFC - ***	Page	5.13
CNIC - ***	Page	5.15
NCGB - ***	Page	5.17
NCGC - ***	Page	5.19
FXFA - ***	Page	5.21
FCFB - ***	Page	5.23
FDFA - ***	Page	5.25
FQIA - ***	Page	10.15
Instructions for ordering complete cartridge and body assemblies.	Page	viii
Pressure ratings, material specifications.	Page	11.02
SAE Specifications.	Page	11.03

Mounting Hole Dimensions	*Gauge Port*	ALUMINIUM		SG IRON	
		Model Code	*List Price*	*Model Code*	*List Price*
Inch	.25 NPTF	**LAQ**		**LAQ/S**	
Metric	.25 BSPP	**LAQ/M**		**LAQ/T**	

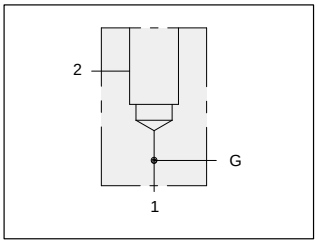

90 degree 1.25” SAE Code 62 flange port body with gauge port.

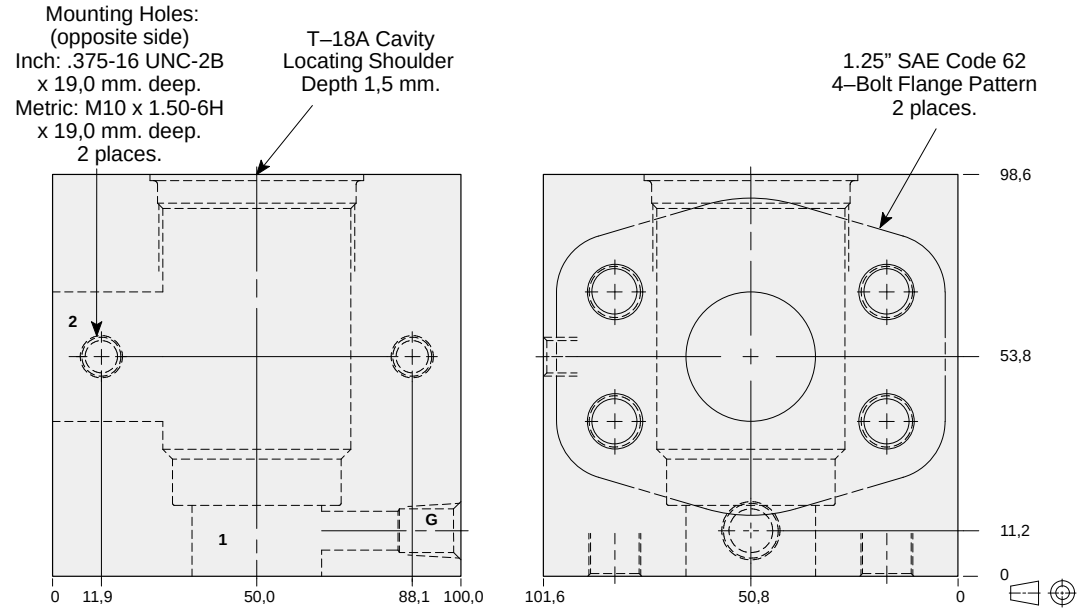

TYPICAL CARTRIDGES USED WITH THIS BODY

RPKC - ***	Page	1.07
RPKE - ***	Page	1.09
RDJA - ***	Page	1.11
RQKB - ***	Page	1.13
RPKD - ***	Page	1.15
CXJA - ***	Page	5.09
CXID - ***	Page	5.11
NFFC - ***	Page	5.13
CNIC - ***	Page	5.15
NCGB - ***	Page	5.17
NCGC - ***	Page	5.19
FXFA - ***	Page	5.21
FCFB - ***	Page	5.23
FDFA - ***	Page	5.25
FQIA - ***	Page	10.15
Instructions for ordering complete cartridge and body assemblies.	Page	viii
Pressure ratings, material specifications.	Page	11.02
SAE Specifications.	Page	11.03

Mounting Hole Dimensions	*Gauge Port*	ALUMINIUM		SG IRON	
		Model Code	*List Price*	*Model Code*	*List Price*
Inch	.25 NPTF	**LA5**		**LA5/S**	
Metric	.25 BSPP	**LA5/M**		**LA5/T**	

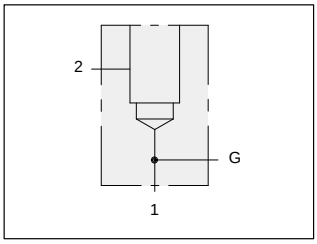

90 degree 1.50” SAE Code 61 flange port body with gauge port.

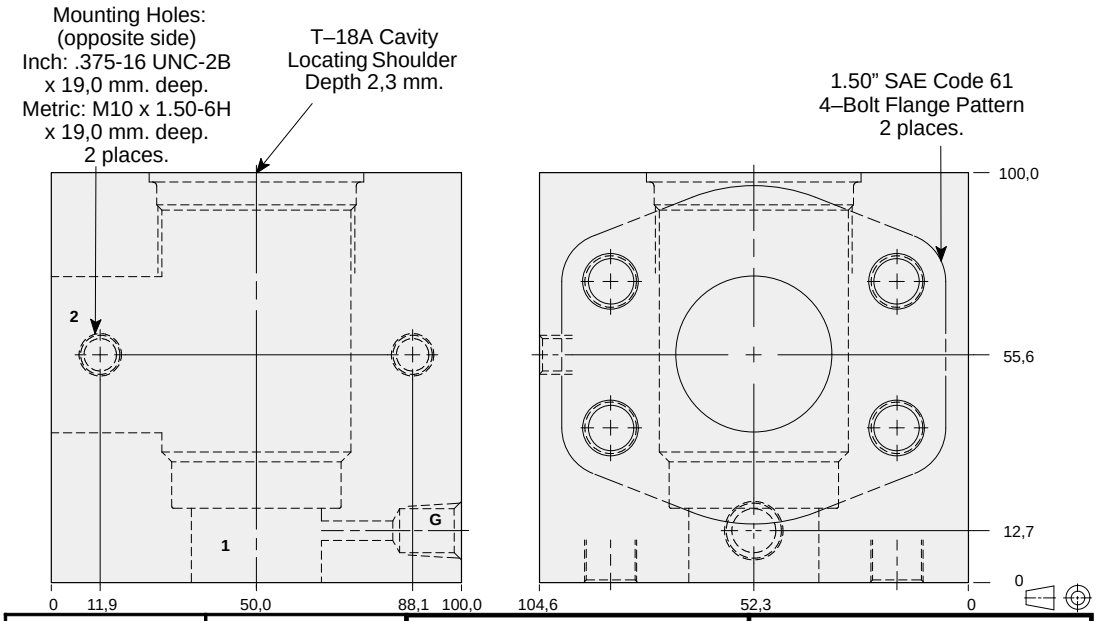

Mounting Hole Dimensions	*Gauge Port*	ALUMINIUM		SG IRON	
		Model Code	*List Price*	*Model Code*	*List Price*
Inch	.25 NPTF	**LAR**		**LAR/S**	
Metric	.25 BSPP	**LAR/M**		**LAR/T**	

TYPICAL CARTRIDGES USED WITH THIS BODY

RPKC - ***	Page	1.07
RPKE - ***	Page	1.09
RDJA - ***	Page	1.11
RQKB - ***	Page	1.13
RPKD - ***	Page	1.15
CXJA - ***	Page	5.09
CXID - ***	Page	5.11
NFFC - ***	Page	5.13
CNIC - ***	Page	5.15
NCGB - ***	Page	5.17
NCGC - ***	Page	5.19
FXFA - ***	Page	5.21
FCFB - ***	Page	5.23
FDFA - ***	Page	5.25
FQIA - ***	Page	10.15

Instructions for ordering complete cartridge and body assemblies. Page viii

Pressure ratings, material specifications. Page 11.02

SAE Specifications. Page 11.03

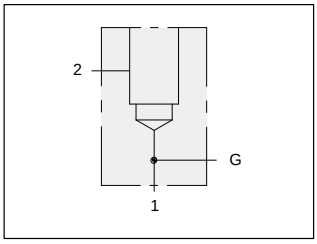

90 degree 1.50” SAE Code 62 flange port body with gauge port.

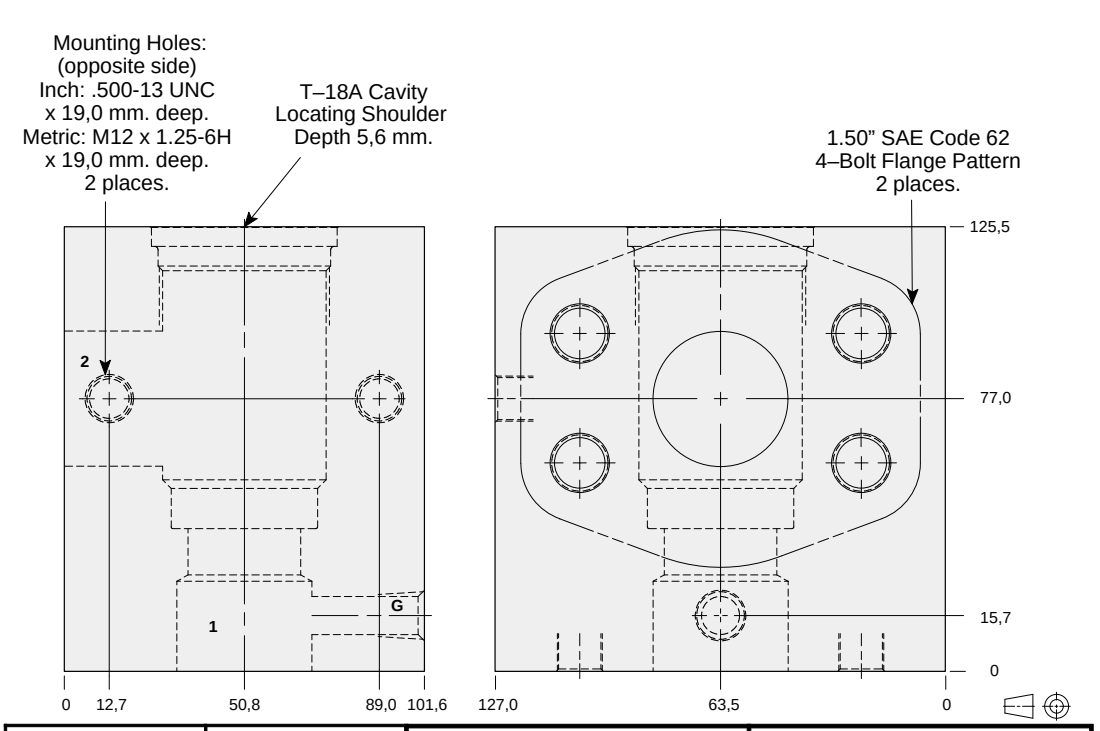

Mounting Hole Dimensions	*Gauge Port*	ALUMINIUM		SG IRON	
		Model Code	*List Price*	*Model Code*	*List Price*
Inch	.25 NPTF	**LA6**		**LA6/S**	
Metric	.25 BSPP	**LA6/M**		**LA6/T**	

TYPICAL CARTRIDGES USED WITH THIS BODY

RPKC - ***	Page	1.07
RPKE - ***	Page	1.09
RDJA - ***	Page	1.11
RQKB - ***	Page	1.13
RPKD - ***	Page	1.15
CXJA - ***	Page	5.09
CXID - ***	Page	5.11
NFFC - ***	Page	5.13
CNIC - ***	Page	5.15
NCGB - ***	Page	5.17
NCGC - ***	Page	5.19
FXFA - ***	Page	5.21
FCFB - ***	Page	5.23
FDFA - ***	Page	5.25
FQIA - ***	Page	10.15

Instructions for ordering complete cartridge and body assemblies. Page viii

Pressure ratings, material specifications. Page 11.02

SAE Specifications. Page 11.03

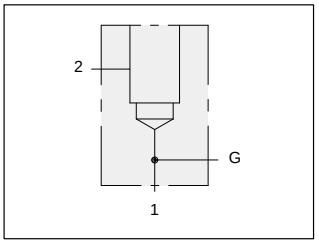

90 degree 2.00” SAE Code 61 flange port body with gauge port.

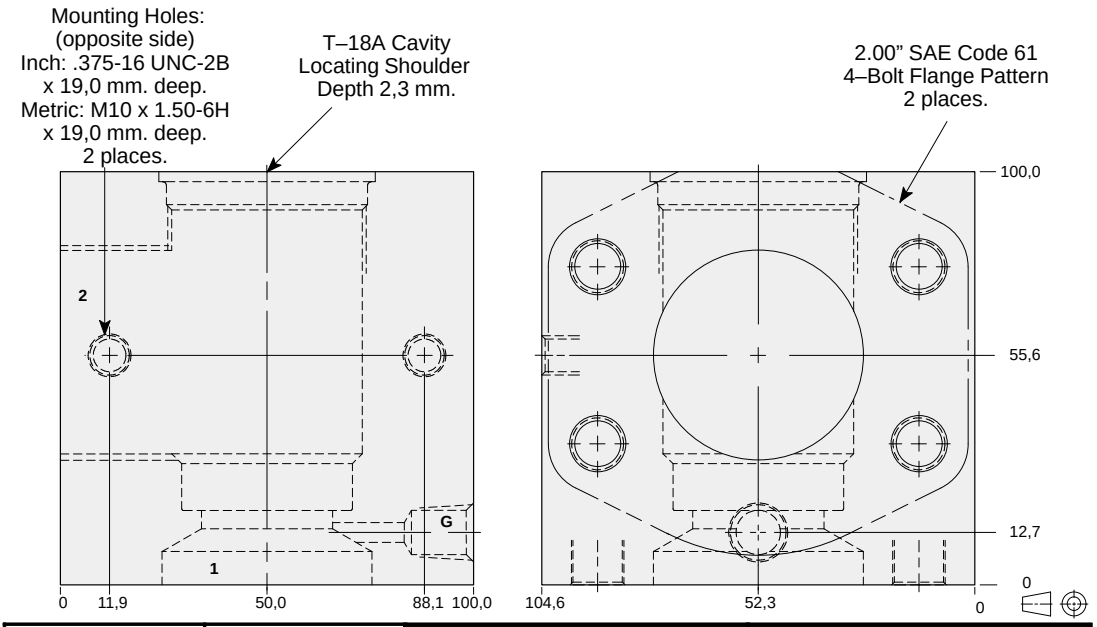

Mounting Hole Dimensions	*Gauge Port*	ALUMINIUM		SG IRON	
		Model Code	*List Price*	*Model Code*	*List Price*
Inch	.25 NPTF	**LAS**		**LAS/S**	
Metric	.25 BSPP	**LAS/M**		**LAS/T**	

TYPICAL CARTRIDGES USED WITH THIS BODY

RPKC - ***	Page	1.07
RPKE - ***	Page	1.09
RDJA - ***	Page	1.11
RQKB - ***	Page	1.13
RPKD - ***	Page	1.15
CXJA - ***	Page	5.09
CXID - ***	Page	5.11
NFFC - ***	Page	5.13
CNIC - ***	Page	5.15
NCGB - ***	Page	5.17
NCGC - ***	Page	5.19
FXFA - ***	Page	5.21
FCFB - ***	Page	5.23
FDFA - ***	Page	5.25
FQIA - ***	Page	10.15

Instructions for ordering complete cartridge and body assemblies. Page viii

Pressure ratings, material specifications. Page 11.02

SAE Specifications. Page 11.03

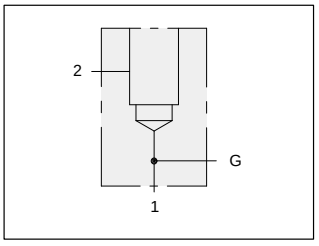

90 degree 2.00” SAE Code 62 flange port body with gauge port.

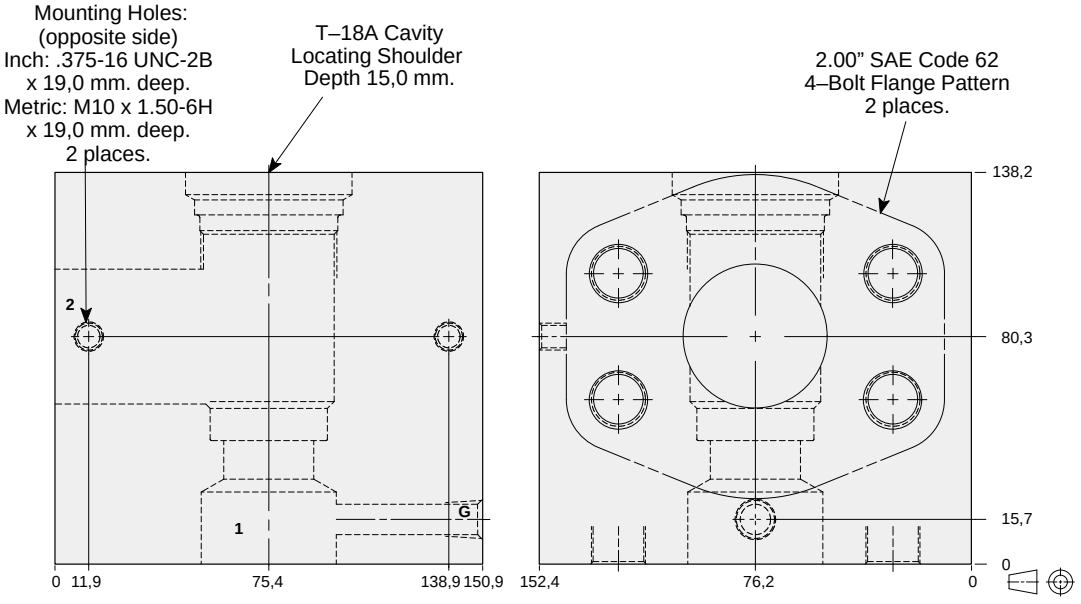

Mounting Hole Dimensions	*Gauge Port*	ALUMINIUM		SG IRON	
		Model Code	*List Price*	*Model Code*	*List Price*
Inch	.25 NPTF	**LA8**		**LA8/S**	
Metric	.25 BSPP	**LA8/M**		**LA8/T**	

TYPICAL CARTRIDGES USED WITH THIS BODY

RPKC - ***	Page	1.07
RPKE - ***	Page	1.09
RDJA - ***	Page	1.11
RQKB - ***	Page	1.13
RPKD - ***	Page	1.15
CXJA - ***	Page	5.09
CXID - ***	Page	5.11
NFFC - ***	Page	5.13
CNIC - ***	Page	5.15
NCGB - ***	Page	5.17
NCGC - ***	Page	5.19
FXFA - ***	Page	5.21
FCFB - ***	Page	5.23
FDFA - ***	Page	5.25
FQIA - ***	Page	10.15

Instructions for ordering complete cartridge and body assemblies. Page viii

Pressure ratings, material specifications. Page 11.02

SAE Specifications. Page 11.03

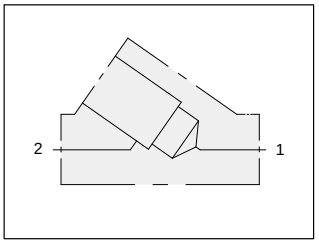

TYPICAL CARTRIDGES USED WITH THIS BODY

RPKC - ***	Page	1.07
RPKE - ***	Page	1.09
RDJA - ***	Page	1.11
RQKB - ***	Page	1.13
RPKD - ***	Page	1.15
CXJA - ***	Page	5.09
CXID - ***	Page	5.11
NFFC - ***	Page	5.13
CNIC - ***	Page	5.15
NCGB - ***	Page	5.17
NCGC - ***	Page	5.19
FXFA - ***	Page	5.21
FCFB - ***	Page	5.23
FDFA - ***	Page	5.25
FQIA - ***	Page	10.15
Instructions for ordering complete cartridge and body assemblies.	Page	viii
Pressure ratings, material specifications.	Page	11.02
SAE Specifications.	Page	11.03

Inline 1.50” SAE Code 61 flange port body.

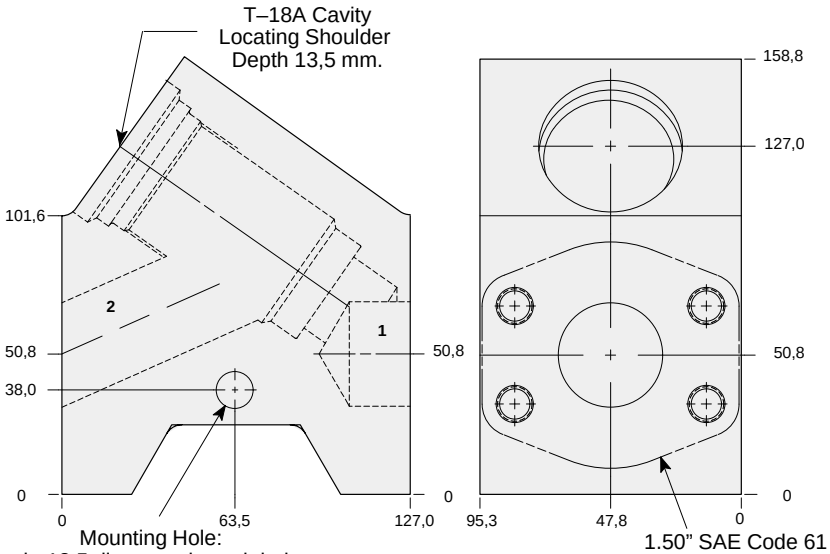

Mounting Hole:
Inch: 13,5 diameter through hole.
Metric: 12,7 mm. diameter through hole.

1.50” SAE Code 61
4–Bolt Flange Pattern
2 places.

Mounting Hole Dimensions	ALUMINIUM		SG IRON	
	Model Code	*List Price*	*Model Code*	*List Price*
Inch	**ZLS**		**ZLS/S**	
Metric	**ZLS/M**		**ZLS/T**	

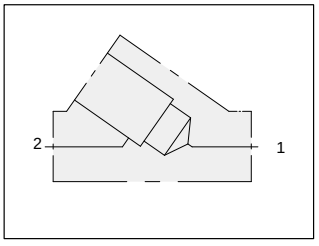

TYPICAL CARTRIDGES USED WITH THIS BODY

RPKC - ***	Page	1.07
RPKE - ***	Page	1.09
RDJA - ***	Page	1.11
RQKB - ***	Page	1.13
RPKD - ***	Page	1.15
CXJA - ***	Page	5.09
CXID - ***	Page	5.11
NFFC - ***	Page	5.13
CNIC - ***	Page	5.15
NCGB - ***	Page	5.17
NCGC - ***	Page	5.19
FXFA - ***	Page	5.21
FCFB - ***	Page	5.23
FDFA - ***	Page	5.25
FQIA - ***	Page	10.15
Instructions for ordering complete cartridge and body assemblies.	Page	viii
Pressure ratings, material specifications.	Page	11.02
SAE Specifications.	Page	11.03

Inline 2.00” SAE Code 61 flange port body.

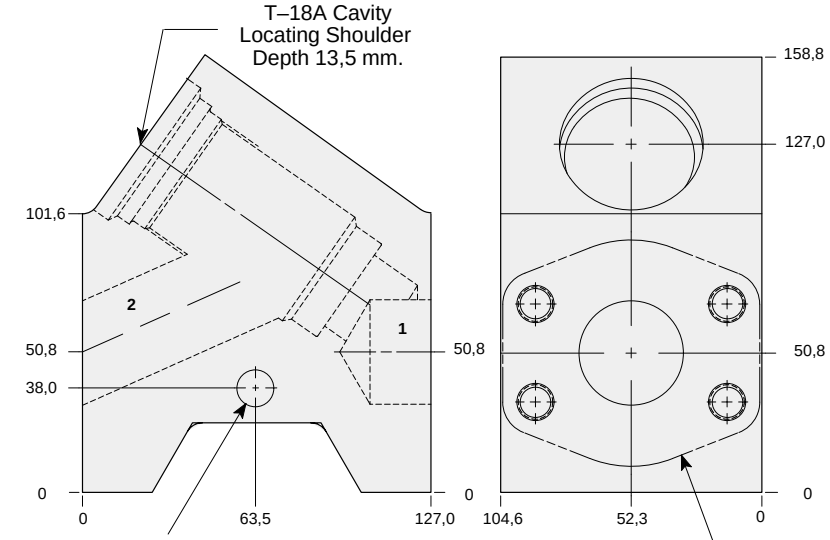

Mounting Hole:
Inch: 13,5 diameter through hole.
Metric: 12,7 mm. diameter through hole.

2.00” SAE Code 61
4–Bolt Flange Pattern
2 places.

Mounting Hole Dimensions	ALUMINIUM		SG IRON	
	Model Code	*List Price*	*Model Code*	*List Price*
Inch	**ZLR**		**ZLR/S**	
Metric	**ZLR/M**		**ZLR/T**	

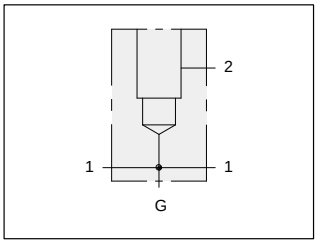

Through port 1.00” SAE Code 61 flange port body with gauge port.

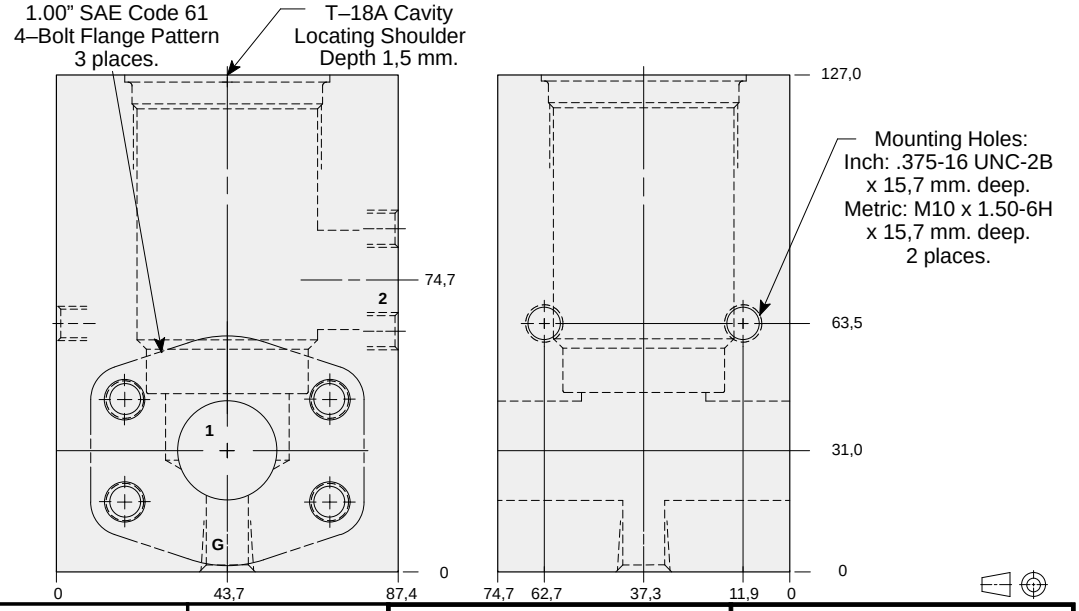

TYPICAL CARTRIDGES USED WITH THIS BODY

RPKC - ***	Page	1.07
RPKE - ***	Page	1.09
RDJA - ***	Page	1.11
RQKB - ***	Page	1.13
RPKD - ***	Page	1.15
NFFC - ***	Page	5.13
CNIC - ***	Page	5.15
NCGB - ***	Page	5.17
NCGC - ***	Page	5.19
FXFA - ***	Page	5.21
FCFB - ***	Page	5.23
FDFA - ***	Page	5.25
Instructions for ordering complete cartridge and body assemblies.	Page	viii
Pressure ratings, material specifications.	Page	11.02
SAE Specifications.	Page	11.03

Mounting Hole Dimensions	*Gauge Port*	ALUMINIUM		SG IRON	
		Model Code	*List Price*	*Model Code*	*List Price*
Inch	.25 NPTF	**LEP**		**LEP/S**	
Metric	.25 BSPP	**LEP/M**		**LEP/T**	

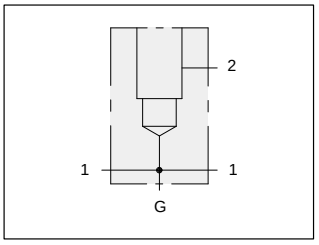

Through port 1.00” SAE Code 62 flange port body with gauge port.

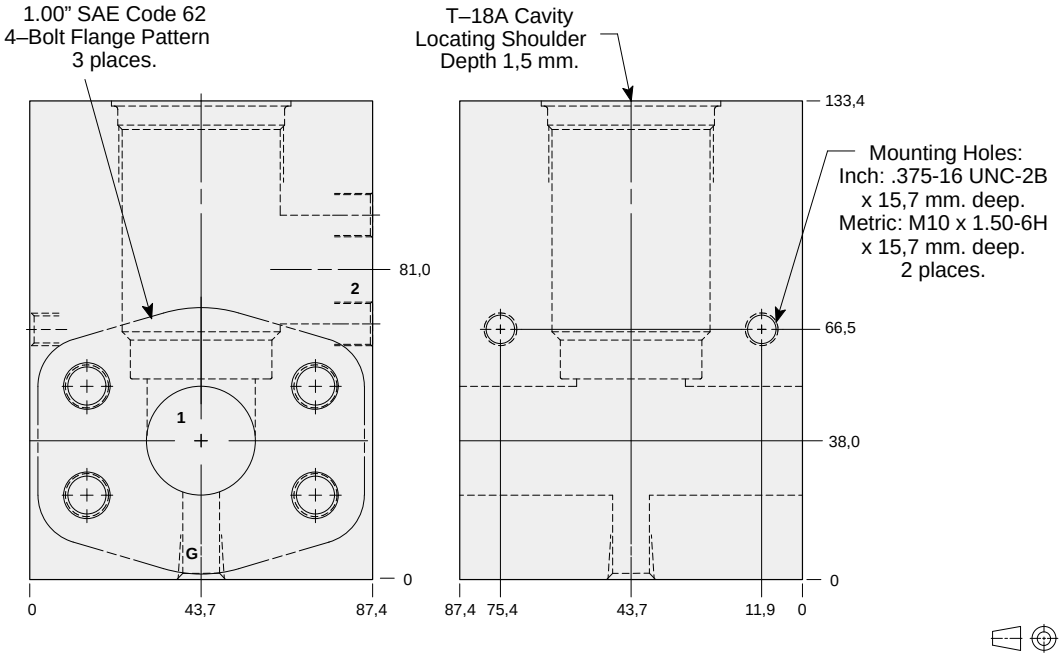

TYPICAL CARTRIDGES USED WITH THIS BODY

RPKC - ***	Page	1.07
RPKE - ***	Page	1.09
RDJA - ***	Page	1.11
RQKB - ***	Page	1.13
RPKD - ***	Page	1.15
NFFC - ***	Page	5.13
CNIC - ***	Page	5.15
NCGB - ***	Page	5.17
NCGC - ***	Page	5.19
FXFA - ***	Page	5.21
FCFB - ***	Page	5.23
FDFA - ***	Page	5.25
Instructions for ordering complete cartridge and body assemblies.	Page	viii
Pressure ratings, material specifications.	Page	11.02
SAE Specifications.	Page	11.03

Mounting Hole Dimensions	*Gauge Port*	ALUMINIUM		SG IRON	
		Model Code	*List Price*	*Model Code*	*List Price*
Inch	.25 NPTF	**LE4**		**LE4/S**	
Metric	.25 BSPP	**LE4/M**		**LE4/T**	

LINE MOUNT BODIES

- Aluminium rated to 210 bar and SG Iron rated to 350 bar.

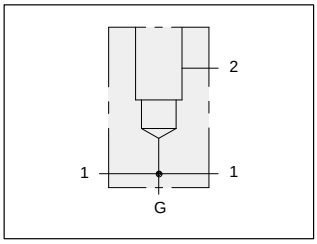

Through port 1.25” SAE Code 61 flange port body with gauge port.

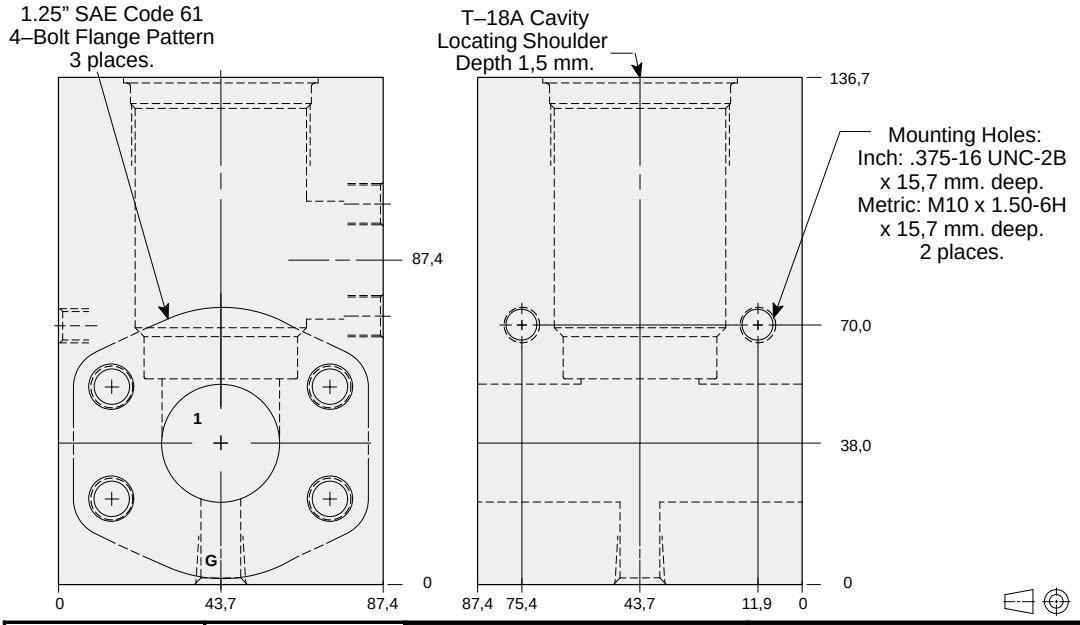

Mounting Hole Dimensions	*Gauge Port*	ALUMINIUM		SG IRON	
		Model Code	*List Price*	*Model Code*	*List Price*
Inch	.25 NPTF	**LEQ**		**LEQ/S**	
Metric	.25 BSPP	**LEQ/M**		**LEQ/T**	

TYPICAL CARTRIDGES USED WITH THIS BODY

RPKC - ***	Page	1.07
RPKE - ***	Page	1.09
RDJA - ***	Page	1.11
RQKB - ***	Page	1.13
RPKD - ***	Page	1.15
NFFC - ***	Page	5.13
CNIC - ***	Page	5.15
NCGB - ***	Page	5.17
NCGC - ***	Page	5.19
FXFA - ***	Page	5.21
FCFB - ***	Page	5.23
FDFA - ***	Page	5.25
Instructions for ordering complete cartridge and body assemblies.	Page	viii
Pressure ratings, material specifications.	Page	11.02
SAE Specifications.	Page	11.03

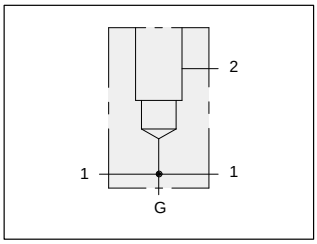

Through port 1.25” SAE Code 62 flange port body with gauge port.

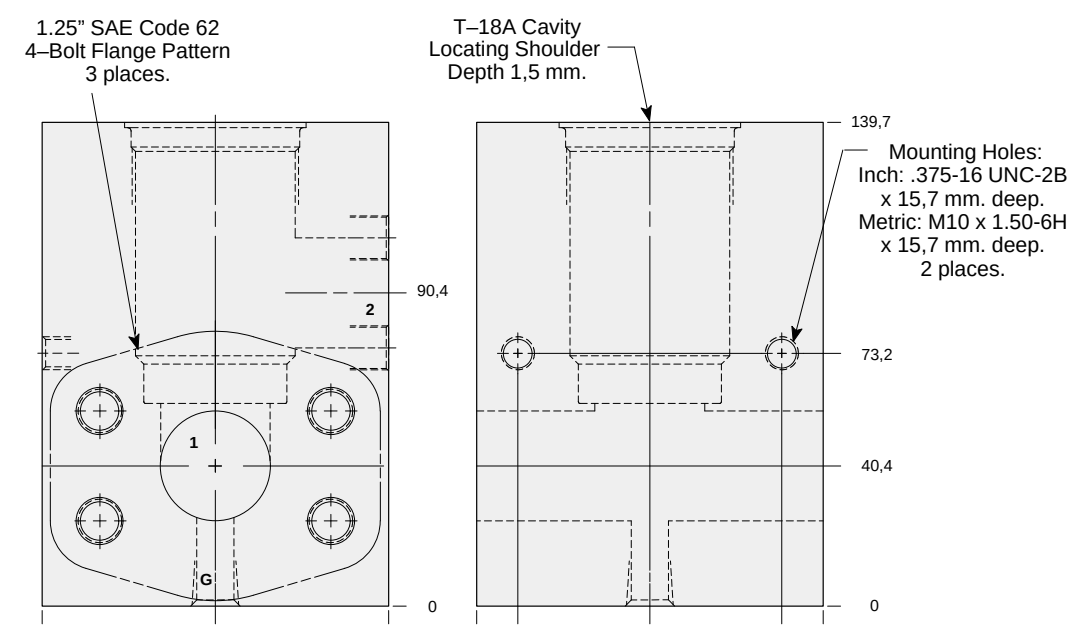

Mounting Hole Dimensions	*Gauge Port*	ALUMINIUM		SG IRON	
		Model Code	*List Price*	*Model Code*	*List Price*
Inch	.25 NPTF	**LE5**		**LE5/S**	
Metric	.25 BSPP	**LE5/M**		**LE5/T**	

TYPICAL CARTRIDGES USED WITH THIS BODY

RPKC - ***	Page	1.07
RPKE - ***	Page	1.09
RDJA - ***	Page	1.11
RQKB - ***	Page	1.13
RPKD - ***	Page	1.15
NFFC - ***	Page	5.13
CNIC - ***	Page	5.15
NCGB - ***	Page	5.17
NCGC - ***	Page	5.19
FXFA - ***	Page	5.21
FCFB - ***	Page	5.23
FDFA - ***	Page	5.25
Instructions for ordering complete cartridge and body assemblies.	Page	viii
Pressure ratings, material specifications.	Page	11.02
SAE Specifications.	Page	11.03

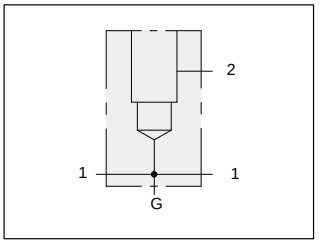

Through port 1.50” SAE Code 61 flange port body with gauge port.

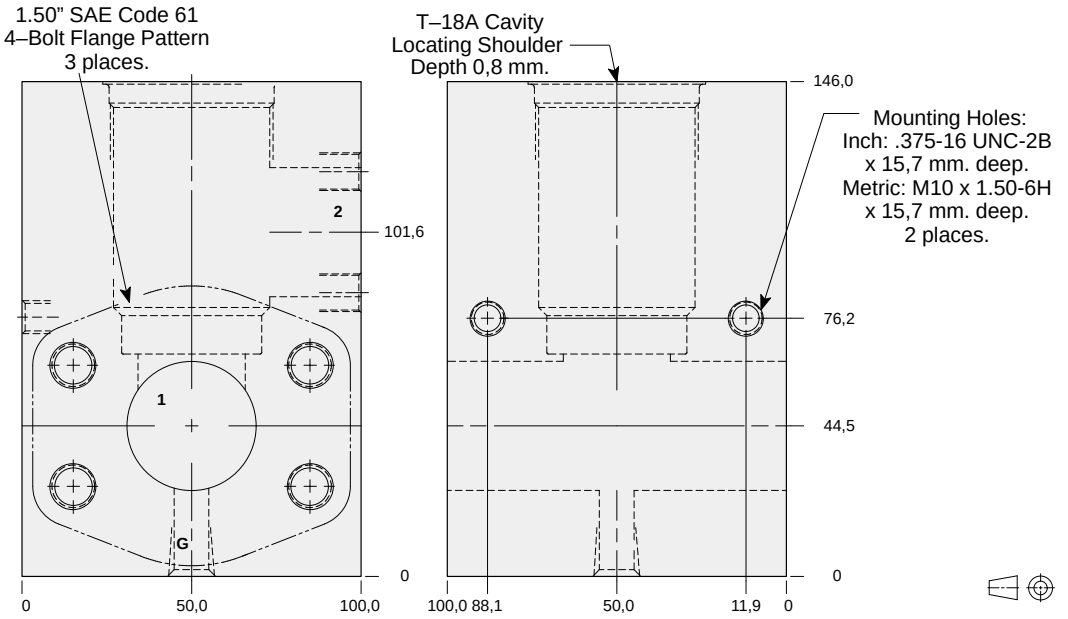

Mounting Hole Dimensions	*Gauge Port*	ALUMINIUM		SG IRON	
		Model Code	*List Price*	*Model Code*	*List Price*
Inch	.25 NPTF	**LER**		**LER/S**	
Metric	.25 BSPP	**LER/M**		**LER/T**	

TYPICAL CARTRIDGES USED WITH THIS BODY

RPKC - ***	Page	1.07
RPKE - ***	Page	1.09
RDJA - ***	Page	1.11
RQKB - ***	Page	1.13
RPKD - ***	Page	1.15
NFFC - ***	Page	5.13
CNIC - ***	Page	5.15
NCGB - ***	Page	5.17
NCGC - ***	Page	5.19
FXFA - ***	Page	5.21
FCFB - ***	Page	5.23
FDFA - ***	Page	5.25

Instructions for ordering complete cartridge and body assemblies. Page viii

Pressure ratings, material specifications. Page 11.02

SAE Specifications. Page 11.03

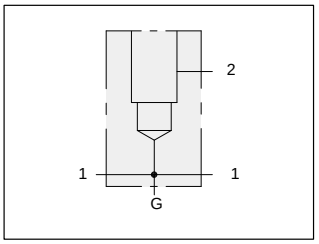

Through port 1.50” SAE Code 62 flange port body with gauge port.

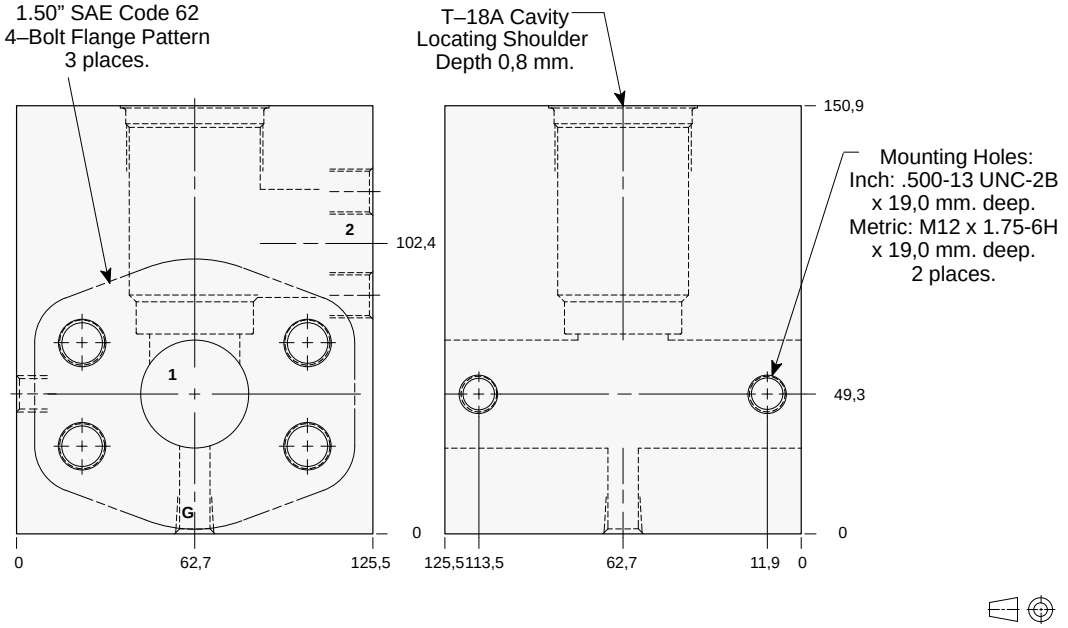

Mounting Hole Dimensions	*Gauge Port*	ALUMINIUM		SG IRON	
		Model Code	*List Price*	*Model Code*	*List Price*
Inch	.25 NPTF	**LE6**		**LE6/S**	
Metric	.25 BSPP	**LE6/M**		**LE6/T**	

TYPICAL CARTRIDGES USED WITH THIS BODY

RPKC - ***	Page	1.07
RPKE - ***	Page	1.09
RDJA - ***	Page	1.11
RQKB - ***	Page	1.13
RPKD - ***	Page	1.15
NFFC - ***	Page	5.13
CNIC - ***	Page	5.15
NCGB - ***	Page	5.17
NCGC - ***	Page	5.19
FXFA - ***	Page	5.21
FCFB - ***	Page	5.23
FDFA - ***	Page	5.25

Instructions for ordering complete cartridge and body assemblies. Page viii

Pressure ratings, material specifications. Page 11.02

SAE Specifications. Page 11.03

LINE MOUNT BODIES

- Aluminium rated to 210 bar and SG Iron rated to 350 bar.

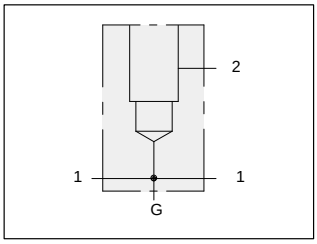

TYPICAL CARTRIDGES USED WITH THIS BODY

RPKC	- ***	Page	1.07
RPKE	- ***	Page	1.09
RDJA	- ***	Page	1.11
RQKB	- ***	Page	1.13
RPKD	- ***	Page	1.15
NFFC	- ***	Page	5.13
CNIC	- ***	Page	5.15
NCGB	- ***	Page	5.17
NCGC	- ***	Page	5.19
FXFA	- ***	Page	5.21
FCFB	- ***	Page	5.23
FDFA	- ***	Page	5.25

Instructions for ordering complete cartridge and body assemblies. Page viii

Pressure ratings, material specifications. Page 11.02

SAE Specifications. Page 11.03

Through port 2.00” SAE Code 61 flange port body with gauge port.

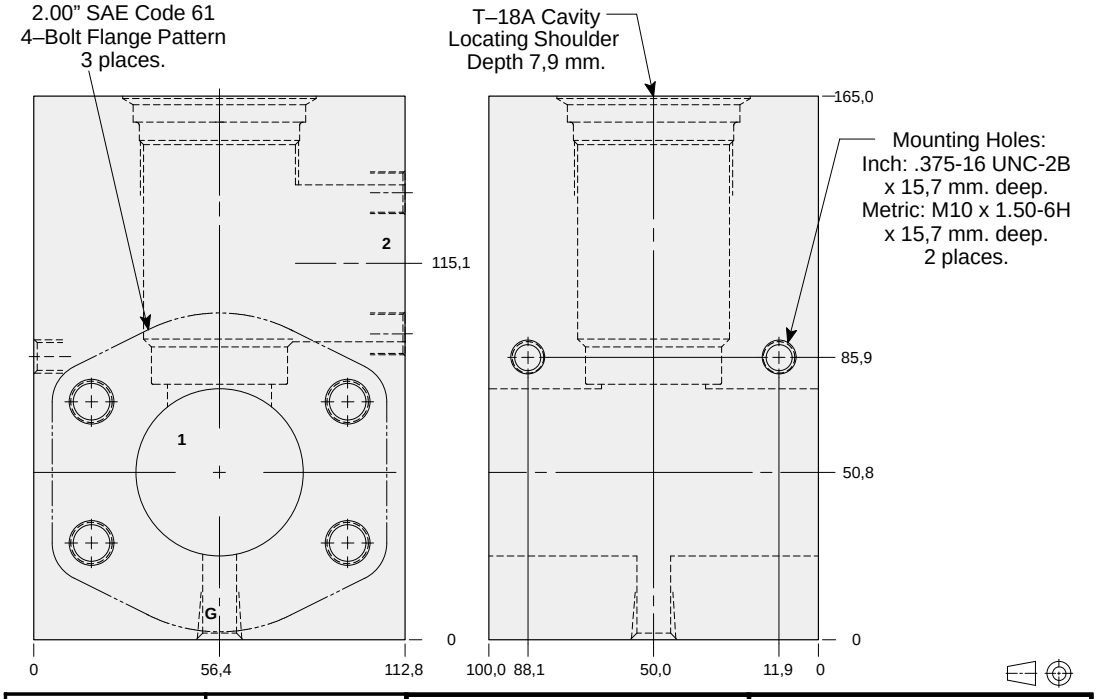

Mounting Hole Dimensions	*Gauge Port*	ALUMINIUM		SG IRON	
		Model Code	*List Price*	*Model Code*	*List Price*
Inch	.25 NPTF	**LES**		**LES/S**	
Metric	.25 BSPP	**LES/M**		**LES/T**	

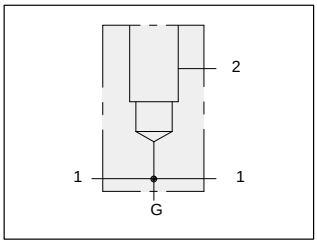

TYPICAL CARTRIDGES USED WITH THIS BODY

RPKC	- ***	Page	1.07
RPKE	- ***	Page	1.09
RDJA	- ***	Page	1.11
RQKB	- ***	Page	1.13
RPKD	- ***	Page	1.15
NFFC	- ***	Page	5.13
CNIC	- ***	Page	5.15
NCGB	- ***	Page	5.17
NCGC	- ***	Page	5.19
FXFA	- ***	Page	5.21
FCFB	- ***	Page	5.23
FDFA	- ***	Page	5.25

Instructions for ordering complete cartridge and body assemblies. Page viii

Pressure ratings, material specifications. Page 11.02

SAE Specifications. Page 11.03

Through port 2.00” SAE Code 62 flange port body with gauge port.

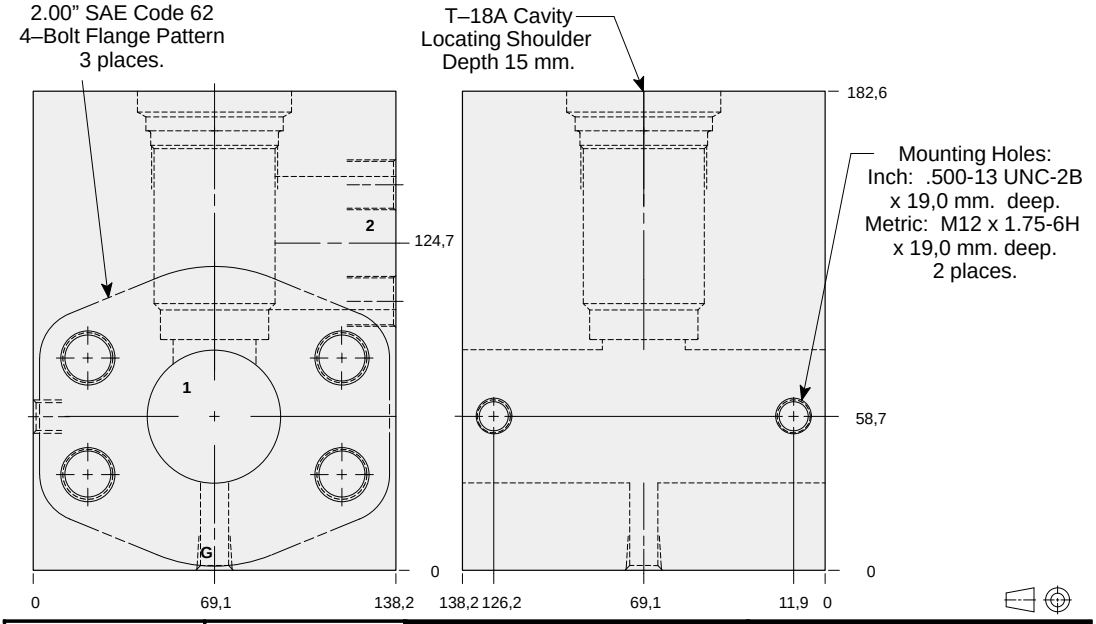

Mounting Hole Dimensions	*Gauge Port*	ALUMINIUM		SG IRON	
		Model Code	*List Price*	*Model Code*	*List Price*
Inch	.25 NPTF	**LE8**		**LE8/S**	
Metric	.25 BSPP	**LE8/M**		**LE8/T**	

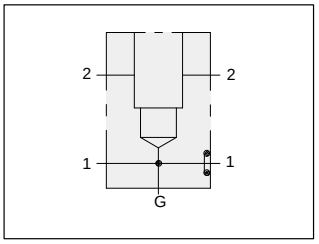

Sandwich mount through flange port 1.00” SAE Code 62 body with gauge port.

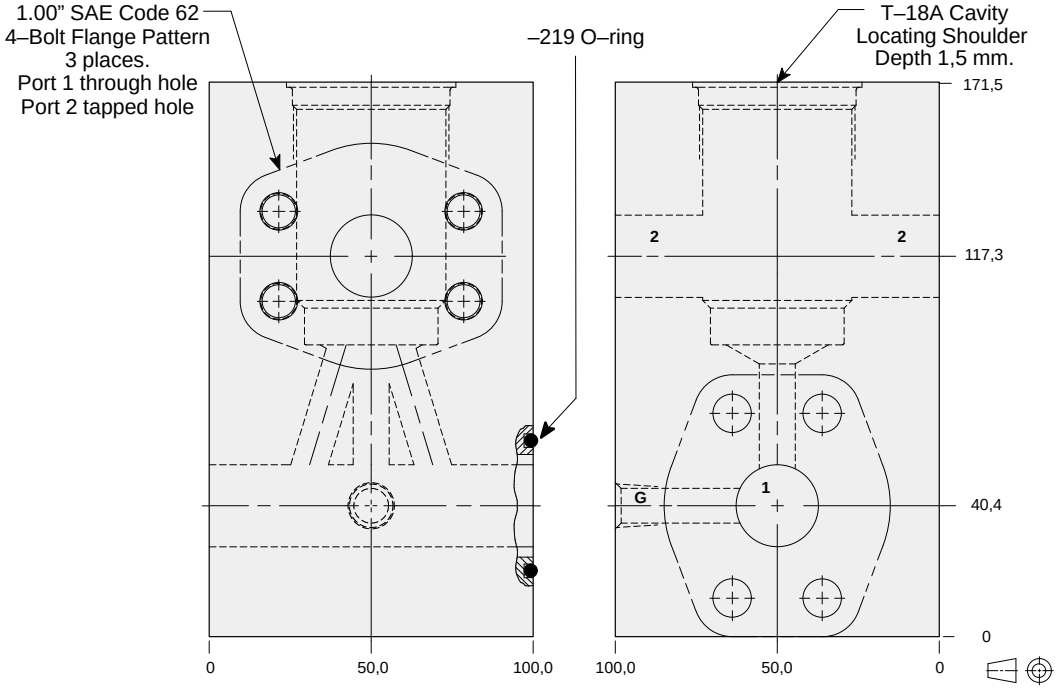

Mounting Hole Dimensions	*Gauge Port*	ALUMINIUM		SG IRON	
		Model Code	*List Price*	*Model Code*	*List Price*
Inch	.25 NPTF	**WJM**		**WJM/S**	
Metric	.25 BSPP	**WJM/M**		**WJM/T**	

TYPICAL CARTRIDGES USED WITH THIS BODY

RPKC - ***	Page	1.07
RPKE - ***	Page	1.09
RDJA - ***	Page	1.11
RQKB - ***	Page	1.13
RPKD - ***	Page	1.15

Cartridge seal type determines O–ring type.

Instructions for ordering complete cartridge and body assemblies. Page viii

Pressure ratings, material specifications. Page 11.02

SAE Specifications. Page 11.03

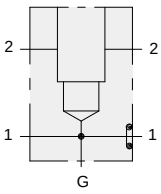

Sandwich mount through flange port 2.00” SAE Code 61 body with gauge port.

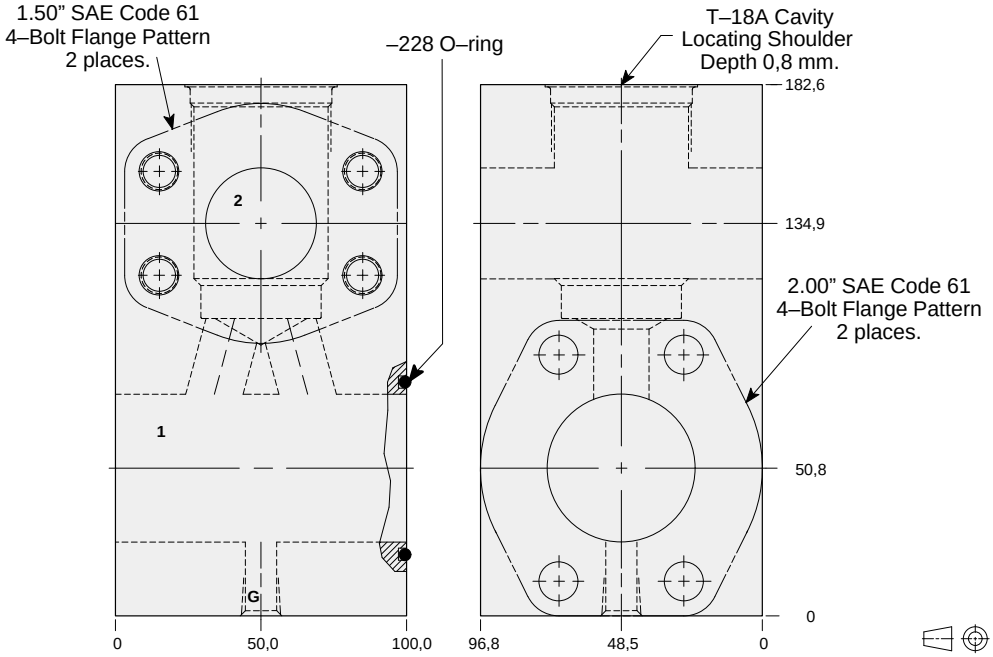

TYPICAL CARTRIDGES USED WITH THIS BODY

RPKC - ***	Page	1.07
RPKE - ***	Page	1.09
RDJA - ***	Page	1.11
RQKB - ***	Page	1.13
RPKD - ***	Page	1.15

Cartridge seal type determines O–ring type.

Instructions for ordering complete cartridge and body assemblies. Page viii

Pressure ratings, material specifications. Page 11.02

SAE Specifications. Page 11.03

Mounting Hole Dimensions	*Port 2 SAE Code 61*	*Gauge Port*	ALUMINIUM		SG IRON	
			Model Code	*List Price*	*Model Code*	*List Price*
Inch	1.50”	.25 NPTF	**ZBF**		**ZBF/S**	
Metric	1.50”	.25 BSPP	**ZBF/M**		**ZBF/T**	

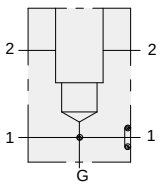

Sandwich mount through flange port 2.00” SAE Code 62 body with gauge port.

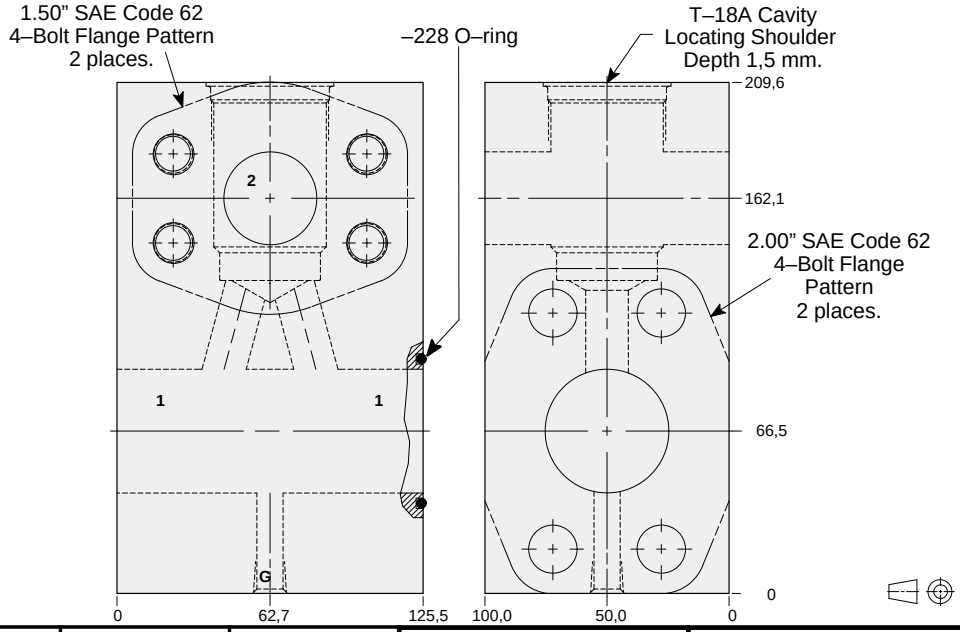

TYPICAL CARTRIDGES USED WITH THIS BODY

RPKC - ***	Page	1.07
RPKE - ***	Page	1.09
RDJA - ***	Page	1.11
RQKB - ***	Page	1.13
RPKD - ***	Page	1.15

Cartridge seal type determines O–ring type.

Instructions for ordering complete cartridge and body assemblies. Page viii

Pressure ratings, material specifications. Page 11.02

SAE Specifications. Page 11.03

Mounting Hole Dimensions	*Port 2 SAE Code 62*	*Gauge Port*	ALUMINIUM		SG IRON	
			Model Code	*List Price*	*Model Code*	*List Price*
Inch	1.50”	.25 NPTF	**ZBH**		**ZBH/S**	
Metric	1.50”	.25 BSPP	**ZBH/M**		**ZBH/T**	

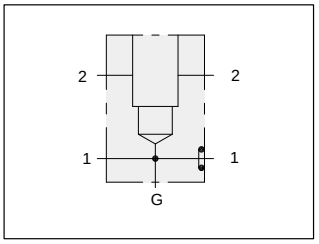

Sandwich mount through flange port 2.00” SAE Code 61 body with gauge port.

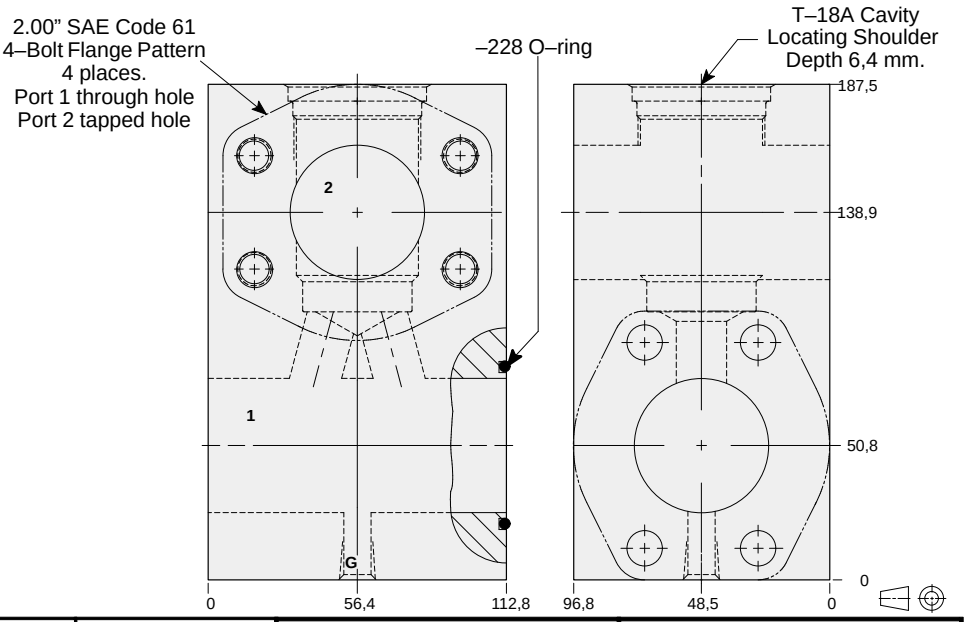

TYPICAL CARTRIDGES USED WITH THIS BODY

RPKC - ***	Page	1.07
RPKE - ***	Page	1.09
RDJA - ***	Page	1.11
RQKB - ***	Page	1.13
RPKD - ***	Page	1.15

Cartridge seal type determines O–ring type.

Instructions for ordering complete cartridge and body assemblies. Page viii

Pressure ratings, material specifications. Page 11.02

SAE Specifications. Page 11.03

Mounting Hole Dimensions	*Gauge Port*	ALUMINIUM		SG IRON	
		Model Code	*List Price*	*Model Code*	*List Price*
Inch	.25 NPTF	**ZBE**		**ZBE/S**	
Metric	.25 BSPP	**ZBE/M**		**ZBE/T**	

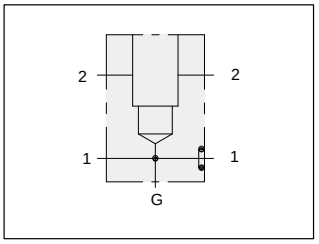

Sandwich mount through flange port 2.00” SAE Code 62 body with gauge port.

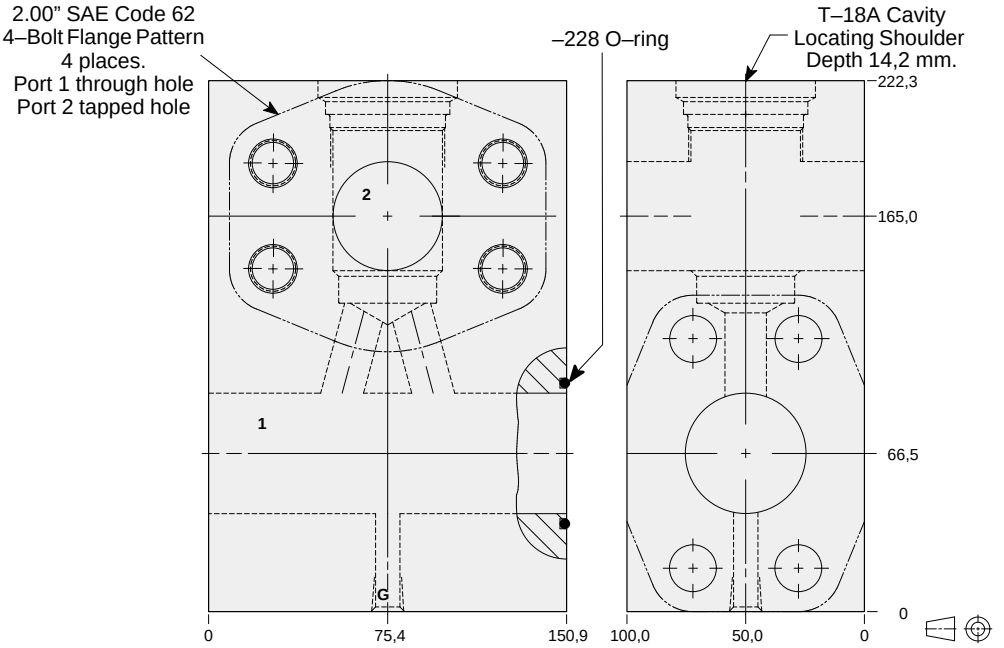

TYPICAL CARTRIDGES USED WITH THIS BODY

RPKC - ***	Page	1.07
RPKE - ***	Page	1.09
RDJA - ***	Page	1.11
RQKB - ***	Page	1.13
RPKD - ***	Page	1.15

Cartridge seal type determines O–ring type.

Instructions for ordering complete cartridge and body assemblies. Page viii

Pressure ratings, material specifications. Page 11.02

SAE Specifications. Page 11.03

Mounting Hole Dimensions	*Gauge Port*	ALUMINIUM		SG IRON	
		Model Code	*List Price*	*Model Code*	*List Price*
Inch	.25 NPTF	**ZBG**		**ZBG/S**	
Metric	.25 BSPP	**ZBG/M**		**ZBG/T**	

- Aluminium rated to 210 bar and SG Iron rated to 350 bar.

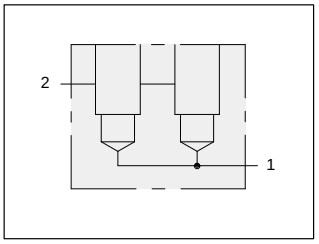

Two cavity 2.00” SAE Code 61 flange port high capacity body.

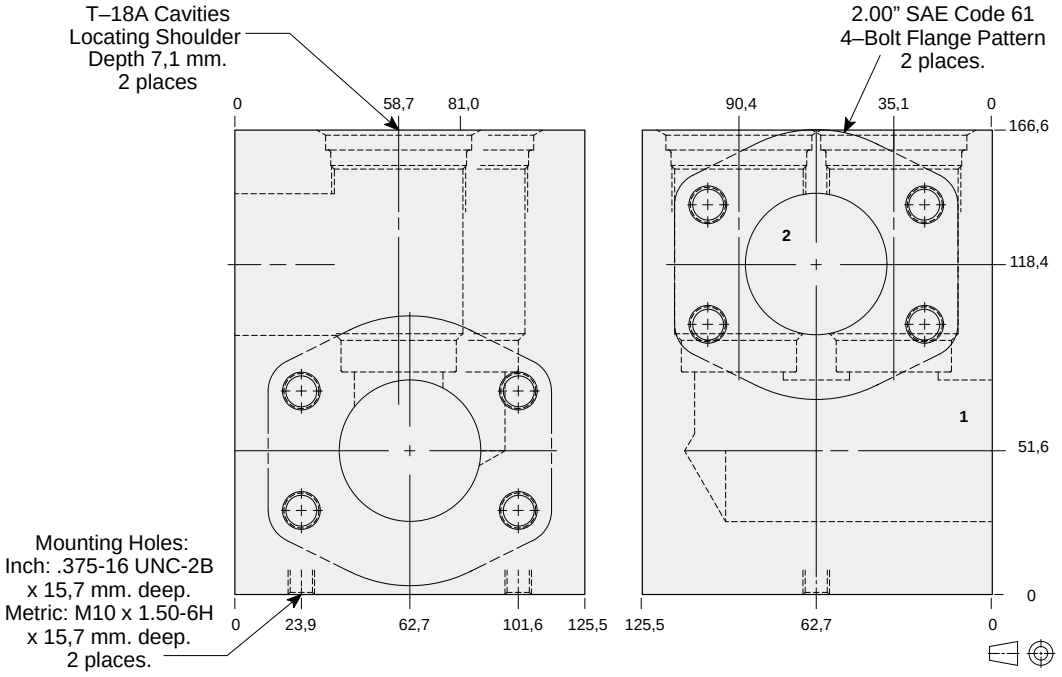

TYPICAL CARTRIDGES USED WITH THIS BODY

RPKC - ***	Page	1.07
RPKE - ***	Page	1.09
RDJA - ***	Page	1.11
RQKB - ***	Page	1.13
RPKD - ***	Page	1.15

Instructions for ordering complete cartridge and body assemblies. Page viii

Pressure ratings, material specifications. Page 11.02

SAE Specifications. Page 11.03

Mounting Hole Dimensions	ALUMINIUM		SG IRON	
	Model Code	*List Price*	*Model Code*	*List Price*
Inch	**XZY**		**XZY/S**	
Metric	**XZY/M**		**XZY/T**	

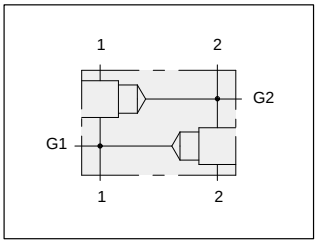

Two cavity 1.50” SAE Code 61 flange port body with gauge ports for cross–port relief applications.

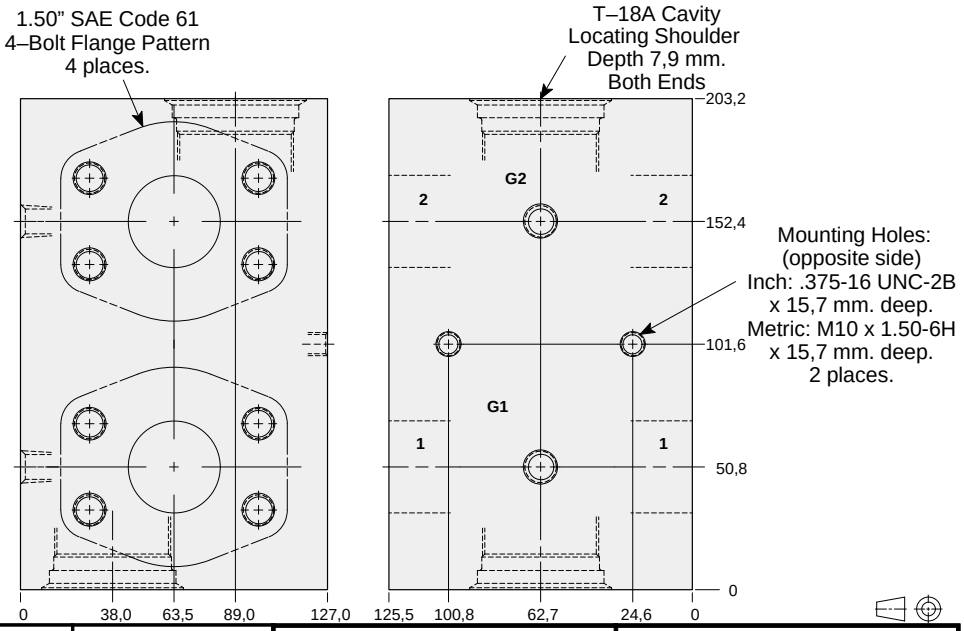

Mounting Hole Dimensions	*Gauge Port*	ALUMINIUM		SG IRON	
		Model Code	*List Price*	*Model Code*	*List Price*
Inch	.25 NPTF	**YLR**		**YLR/S**	
Metric	.25 BSPP	**YLR/M**		**YLR/T**	

TYPICAL CARTRIDGES USED WITH THIS BODY

RPKC - ***	Page	1.07
RPKE - ***	Page	1.09
RDJA - ***	Page	1.11
RQKB - ***	Page	1.13
Instructions for ordering complete cartridge and body assemblies.	Page	viii
Pressure ratings, material specifications.	Page	11.02
SAE Specifications.	Page	11.03

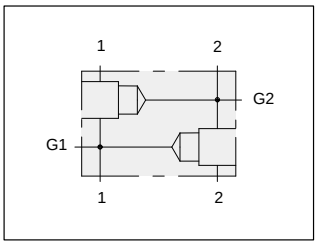

Two cavity 1.50” SAE Code 62 flange port body with gauge ports or cross–port relief applications.

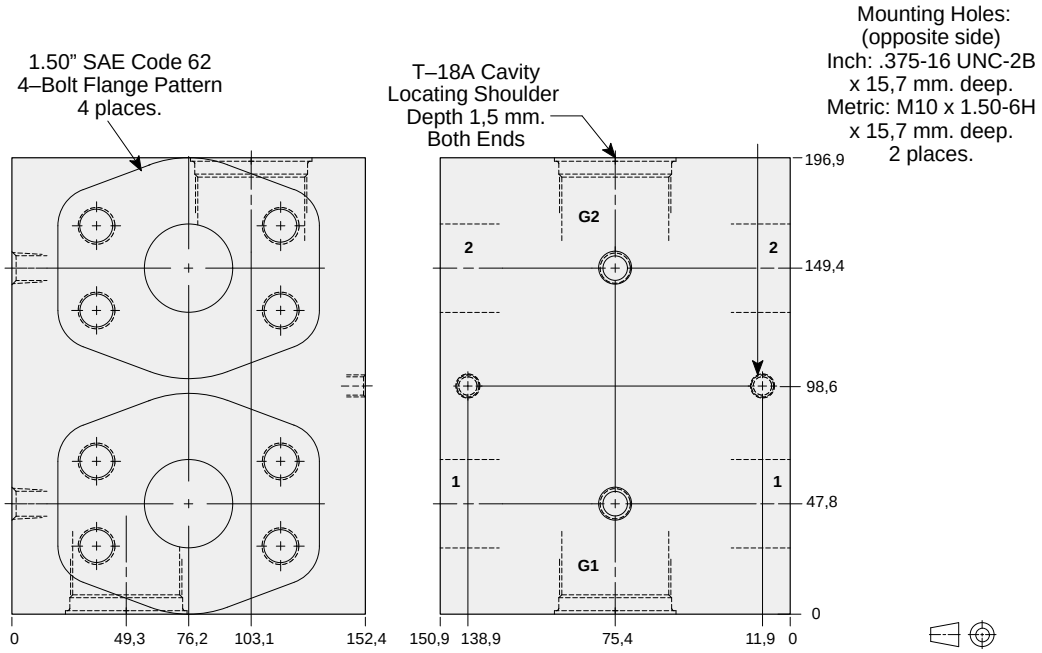

Mounting Hole Dimensions	*Gauge Port*	ALUMINIUM		SG IRON	
		Model Code	*List Price*	*Model Code*	*List Price*
Inch	.25 NPTF	**YL6**		**YL6/S**	
Metric	.25 BSPP	**YL6/M**		**YL6/T**	

TYPICAL CARTRIDGES USED WITH THIS BODY

RPKC - ***	Page	1.07
RPKE - ***	Page	1.09
RDJA - ***	Page	1.11
RQKB - ***	Page	1.13
Instructions for ordering complete cartridge and body assemblies.	Page	viii
Pressure ratings, material specifications.	Page	11.02
SAE Specifications.	Page	11.03

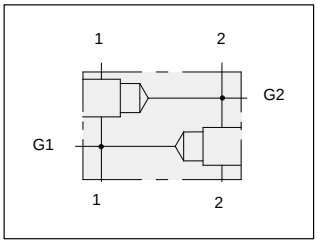

TYPICAL CARTRIDGES USED WITH THIS BODY

RPKC - *** Page 1.07
RPKE - *** Page 1.09
RDJA - *** Page 1.11
RQKB - *** Page 1.13

Instructions for ordering complete cartridge and body assemblies. Page viii

Pressure ratings, material specifications. Page 11.02

SAE Specifications. Page 11.03

Two cavity 2.00” SAE Code 61 flange port body with gauge ports for cross–port relief applications.

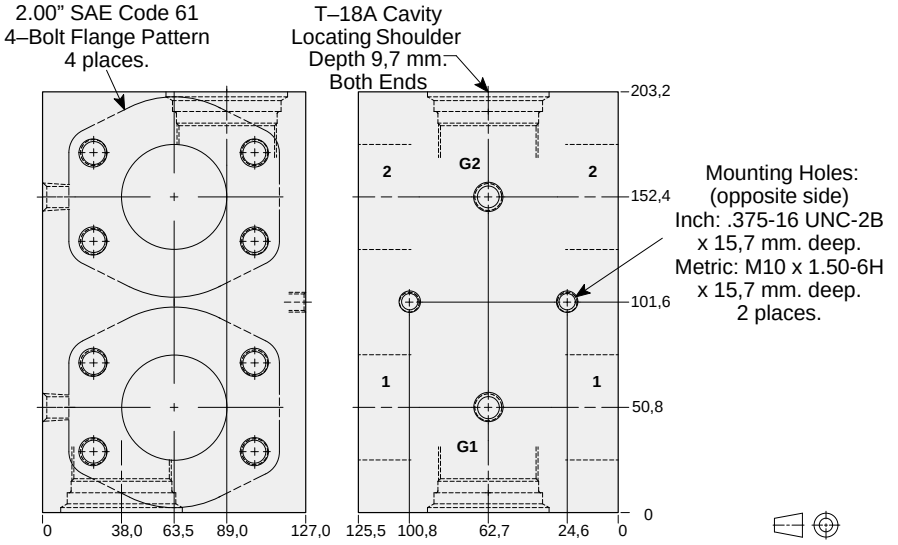

Mounting Hole Dimensions	*Gauge Port*	ALUMINIUM		SG IRON	
		Model Code	*List Price*	*Model Code*	*List Price*
Inch	.25 NPTF	**YLS**		**YLS/S**	
Metric	.25 BSPP	**YLS/M**		**YLS/T**	

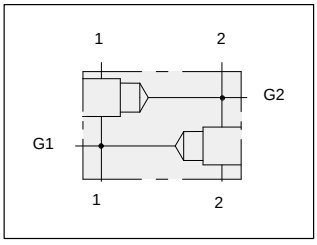

TYPICAL CARTRIDGES USED WITH THIS BODY

RPKC - *** Page 1.07
RPKE - *** Page 1.09
RDJA - *** Page 1.11
RQKB - *** Page 1.13

Instructions for ordering complete cartridge and body assemblies. Page viii

Pressure ratings, material specifications. Page 11.02

SAE Specifications. Page 11.03

Two cavity 2.00” SAE Code 62 flange port body with gauge ports for cross–port relief applications.

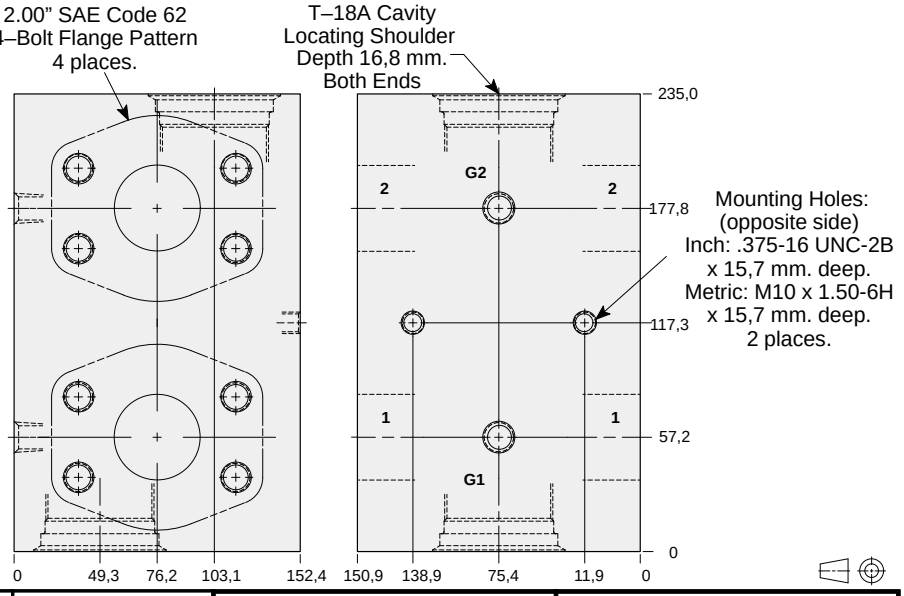

Mounting Hole Dimensions	*Gauge Port*	ALUMINIUM		SG IRON	
		Model Code	*List Price*	*Model Code*	*List Price*
Inch	.25 NPTF	**YL8**		**YL8/S**	
Metric	.25 BSPP	**YL8/M**		**YL8/T**	

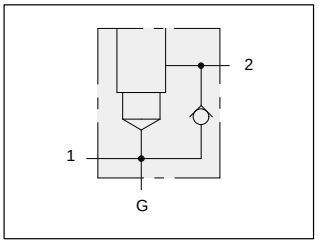

Body with reverse free flow check.

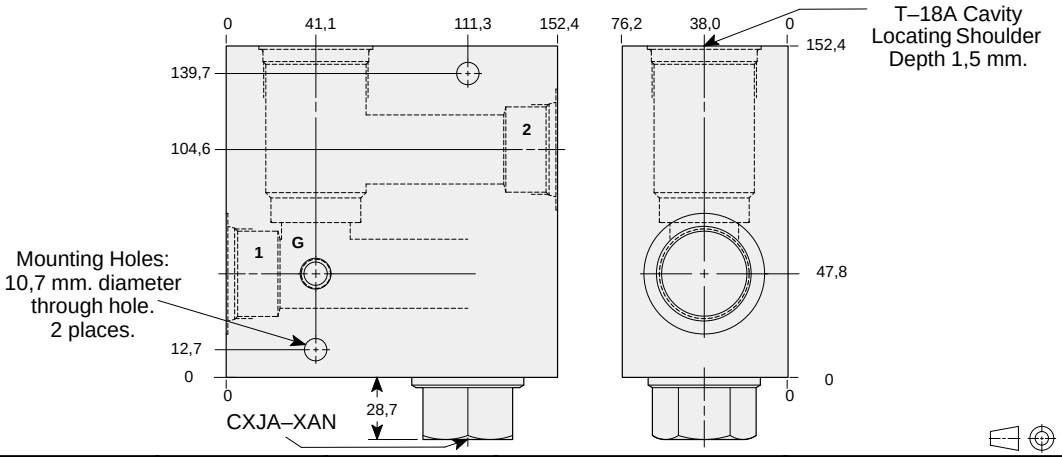

TYPICAL CARTRIDGES USED WITH THIS BODY

RPKC - ***	Page	1.07
RPKE - ***	Page	1.09
RDJA - ***	Page	1.11
RQKB - ***	Page	1.13
RPKD - ***	Page	1.15

Cartridge seal type determines check valve seal type.

Instructions for ordering complete cartridge and body assemblies. Page viii

Pressure ratings, material specifications. Page 11.02

Mounting Hole Dimensions	*Ports 1 & 2*	*Gauge Port*	ALUMINIUM		SG IRON	
			Model Code	*List Price*	*Model Code*	*List Price*
Inch	.75 NPTF	.25 NPTF	**LND**		**LND/S**	
Inch	1.00 NPTF	.25 NPTF	**LNE**		**LNE/S**	
Inch	1.25 NPTF	.25 NPTF	**LNF**		**LNF/S**	
Inch	SAE-12	.25 NPTF	**LNL**		**LNL/S**	
Inch	SAE-16	.25 NPTF	**LNM**		**LNM/S**	
Inch	SAE-20	.25 NPTF	**LNN**		**LNN/S**	
Metric	.75 BSPP	.25 BSPP	**LNW**		**LNW/S**	
Metric	1.00 BSPP	.25 BSPP	**LNX**		**LNX/S**	
Metric	1.25 BSPP	.25 BSPP	**LNY**		**LNY/S**	

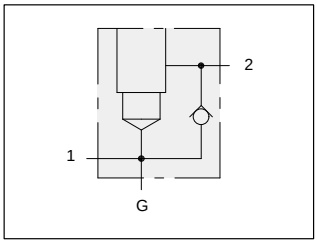

TYPICAL CARTRIDGES USED WITH THIS BODY

RPKC - ***	Page	1.07
RPKE - ***	Page	1.09
RDJA - ***	Page	1.11
RQKB - ***	Page	1.13
RPKD - ***	Page	1.15

Cartridge seal type determines check valve seal type.

Instructions for ordering complete cartridge and body assemblies. Page viii

Pressure ratings, material specifications. Page 11.02

SAE Specifications. Page 11.03

1.25” SAE Code 61 flange port body with reverse free flow check for relief applications.

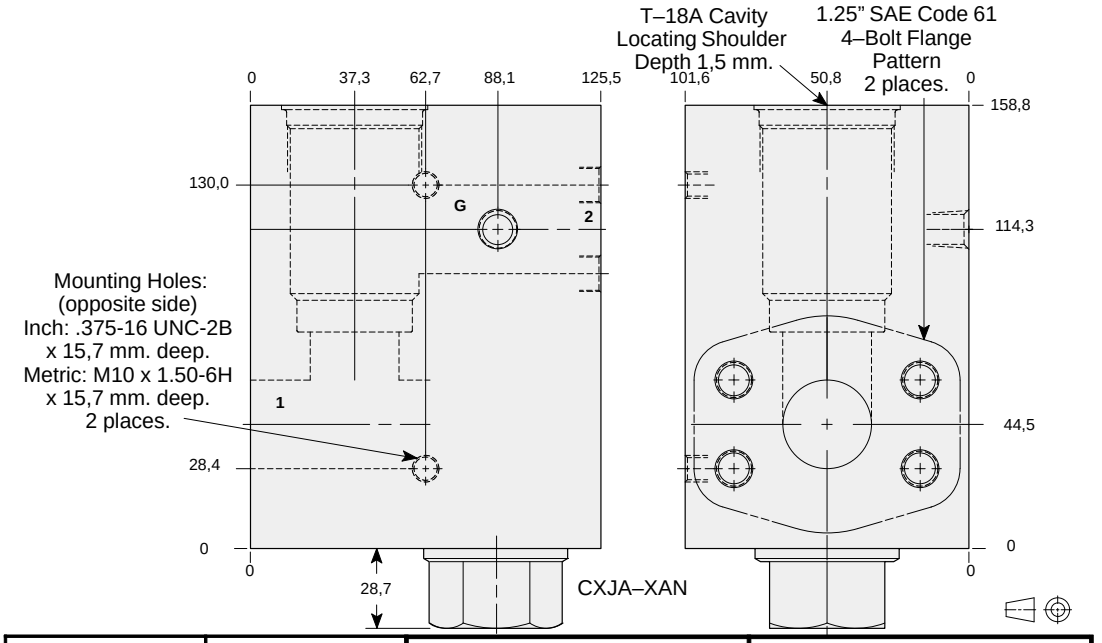

Mounting Hole Dimensions	*Gauge Port*	ALUMINIUM		SG IRON	
		Model Code	*List Price*	*Model Code*	*List Price*
Inch	.25 NPTF	**LNQ**		**LNQ/S**	
Metric	.25 BSPP	**LNQ/M**		**LNQ/T**	

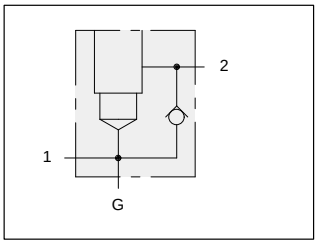

TYPICAL CARTRIDGES USED WITH THIS BODY

RPKC - ***	Page	1.07
RPKE - ***	Page	1.09
RDJA - ***	Page	1.11
RQKB - ***	Page	1.13
RPKD - ***	Page	1.15

Cartridge seal type determines check valve seal type.

Instructions for ordering complete cartridge and body assemblies. Page viii

Pressure ratings, material specifications. Page 11.02

SAE Specifications. Page 11.03

1.25” SAE Code 62 flange port body with reverse free flow check for relief applications.

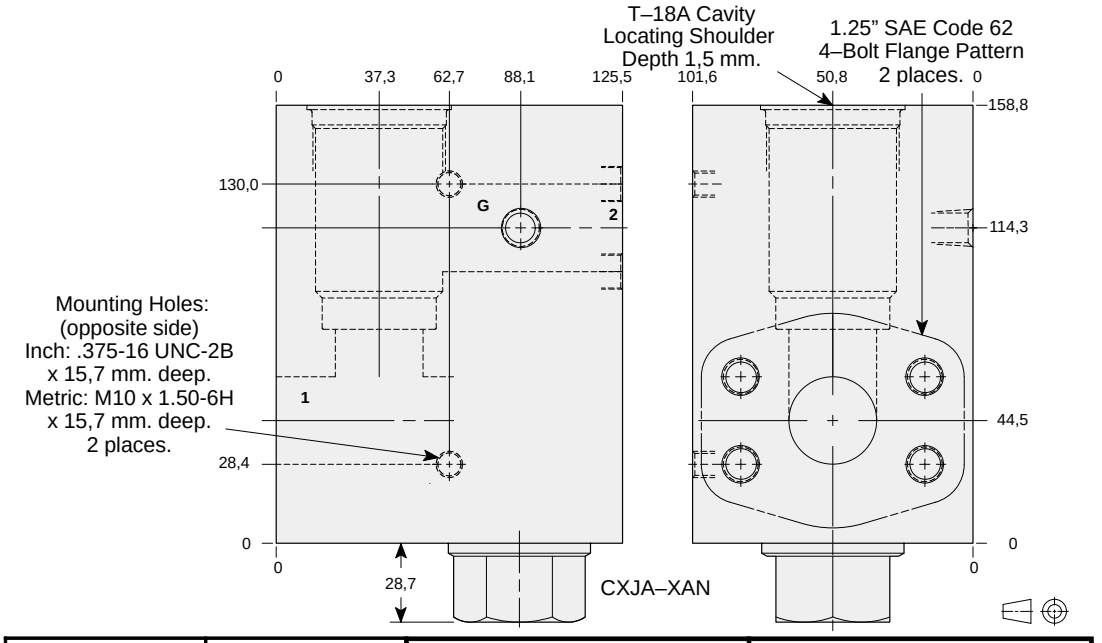

Mounting Hole Dimensions	*Gauge Port*	ALUMINIUM		SG IRON	
		Model Code	*List Price*	*Model Code*	*List Price*
Inch	.25 NPTF	**LN5**		**LN5/S**	
Metric	.25 BSPP	**LN5/M**		**LN5/T**	

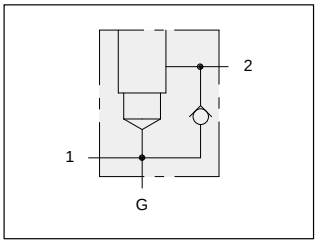

TYPICAL CARTRIDGES USED WITH THIS BODY

RPKC - ***	Page	1.07
RPKE - ***	Page	1.09
RDJA - ***	Page	1.11
RQKB - ***	Page	1.13
RPKD - ***	Page	1.15

Cartridge seal type determines check valve seal type.

Instructions for ordering complete cartridge and body assemblies. Page viii

Pressure ratings, material specifications. Page 11.02

SAE Specifications. Page 11.03

1.50” SAE Code 61 flange port body with reverse free flow check for relief applications.

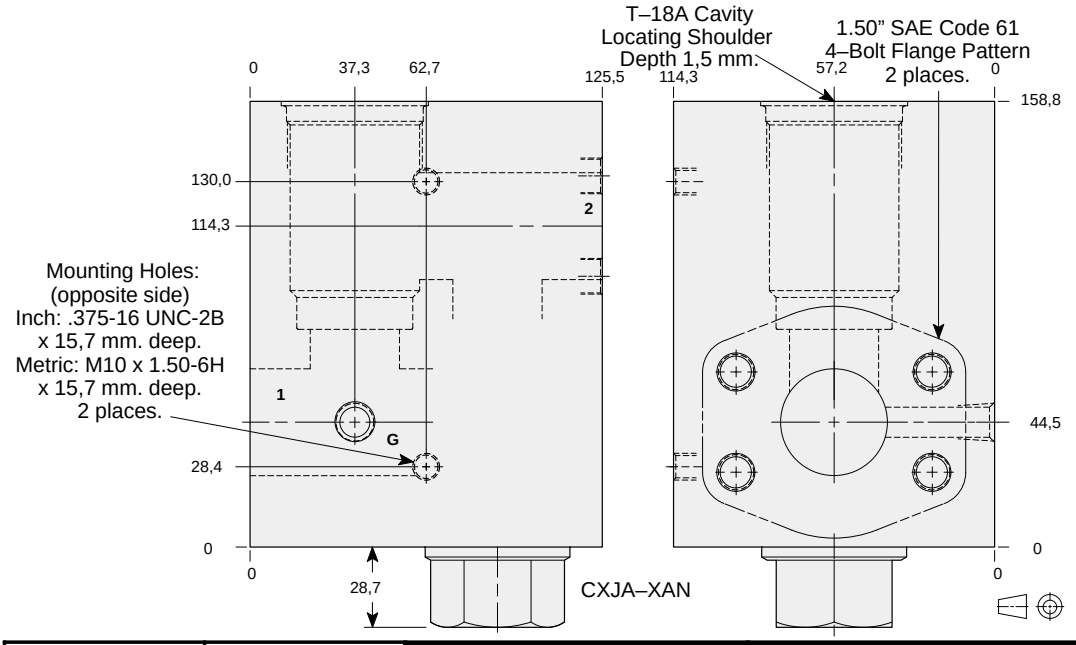

Mounting Hole Dimensions	*Gauge Port*	ALUMINIUM		SG IRON	
		Model Code	*List Price*	*Model Code*	*List Price*
Inch	.25 NPTF	**LNR**		**LNR/S**	
Metric	.25 BSPP	**LNR/M**		**LNR/T**	

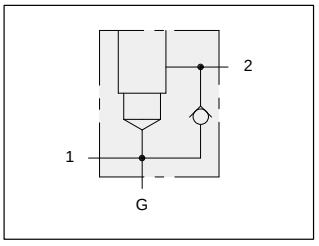

TYPICAL CARTRIDGES USED WITH THIS BODY

RPKC - ***	Page	1.07
RPKE - ***	Page	1.09
RDJA - ***	Page	1.11
RQKB - ***	Page	1.13
RPKD - ***	Page	1.15

Cartridge seal type determines check valve seal type.

Instructions for ordering complete cartridge and body assemblies. Page viii

Pressure ratings, material specifications. Page 11.02

SAE Specifications. Page 11.03

1.50” SAE Code 62 flange port body with reverse free flow check for relief applications.

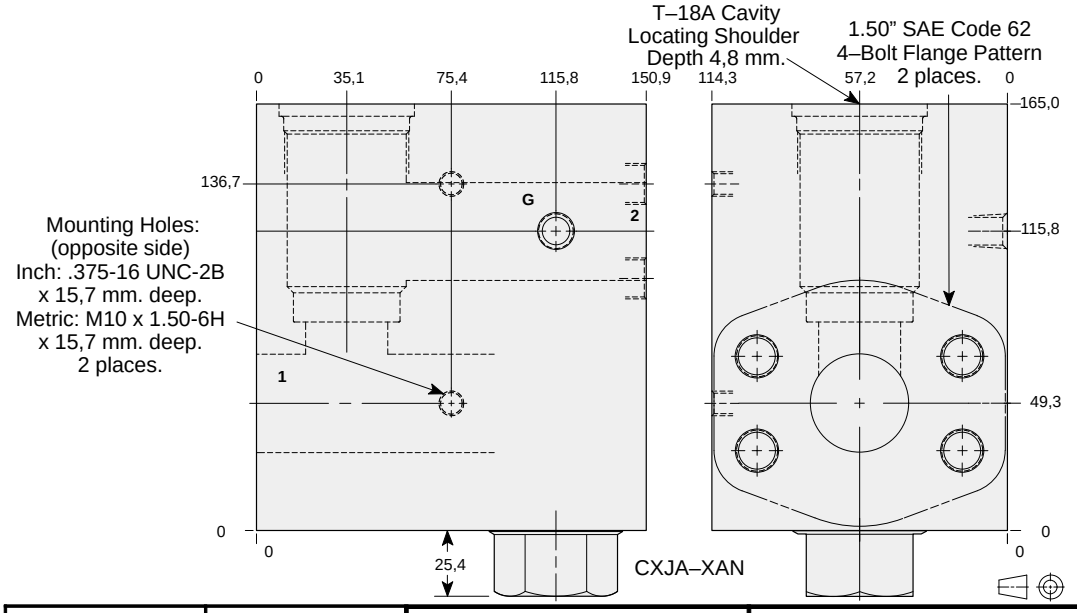

Mounting Hole Dimensions	*Gauge Port*	ALUMINIUM		SG IRON	
		Model Code	*List Price*	*Model Code*	*List Price*
Inch	.25 NPTF	**LN6**		**LN6/S**	
Metric	.25 BSPP	**LN6/M**		**LN6/T**	

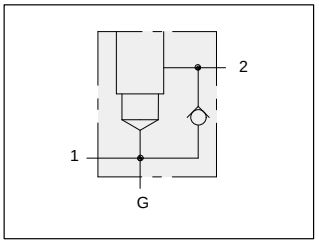

TYPICAL CARTRIDGES USED WITH THIS BODY

RPKC - ***	Page	1.07
RPKE - ***	Page	1.09
RDJA - ***	Page	1.11
RQKB - ***	Page	1.13
RPKD - ***	Page	1.15

Cartridge seal type determines check valve seal type.

Instructions for ordering complete cartridge and body assemblies. Page viii

Pressure ratings, material specifications. Page 11.02

SAE Specifications. Page 11.03

2.00” SAE Code 61 flange port body with reverse free flow check for relief applications.

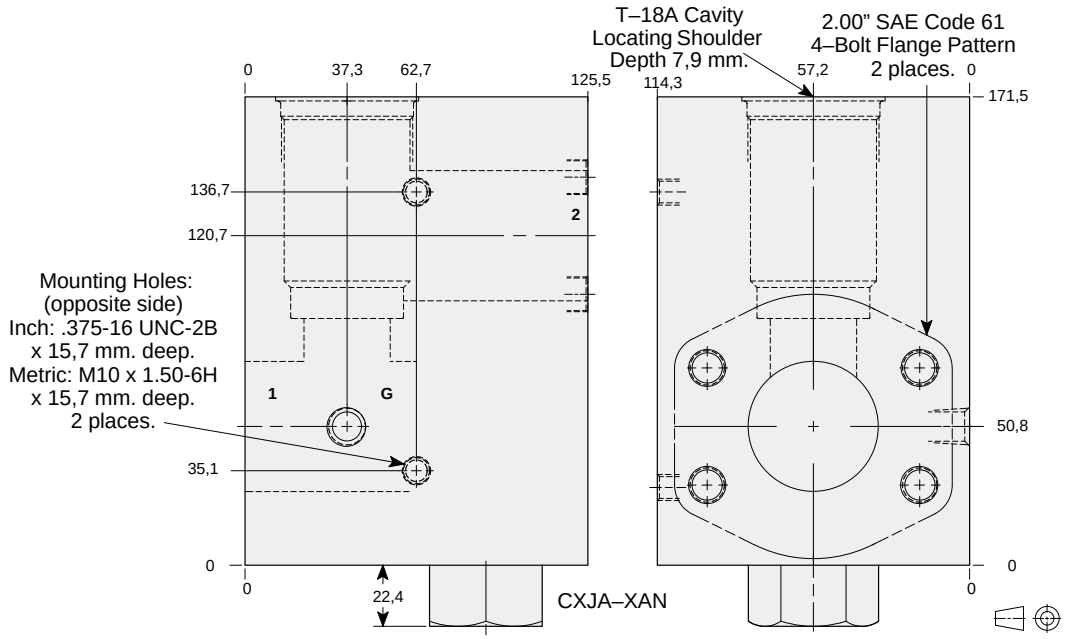

Mounting Hole Dimensions	*Gauge Port*	ALUMINIUM		SG IRON	
		Model Code	*List Price*	*Model Code*	*List Price*
Inch	.25 NPTF	**LNS**		**LNS/S**	
Metric	.25 BSPP	**LNS/M**		**LNS/T**	

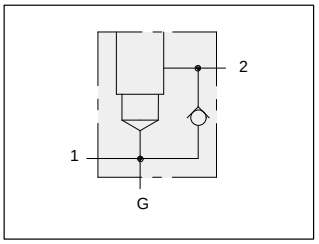

TYPICAL CARTRIDGES USED WITH THIS BODY

RPKC - ***	Page	1.07
RPKE - ***	Page	1.09
RDJA - ***	Page	1.11
RQKB - ***	Page	1.13
RPKD - ***	Page	1.15

Cartridge seal type determines check valve seal type.

Instructions for ordering complete cartridge and body assemblies. Page viii

Pressure ratings, material specifications. Page 11.02

SAE Specifications. Page 11.03

2.00” SAE Code 62 flange port body with reverse free flow check for relief applications.

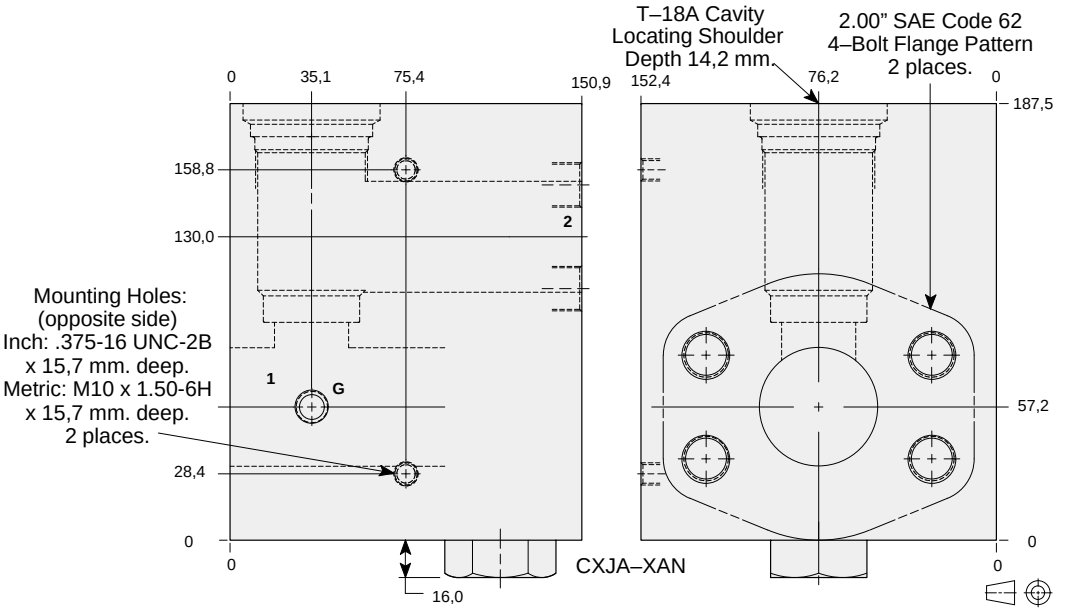

Mounting Hole Dimensions	*Gauge Port*	ALUMINIUM		SG IRON	
		Model Code	*List Price*	*Model Code*	*List Price*
Inch	.25 NPTF	**LN8**		**LN8/S**	
Metric	.25 BSPP	**LN8/M**		**LN8/T**	

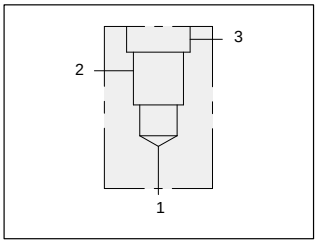

90 degree body.

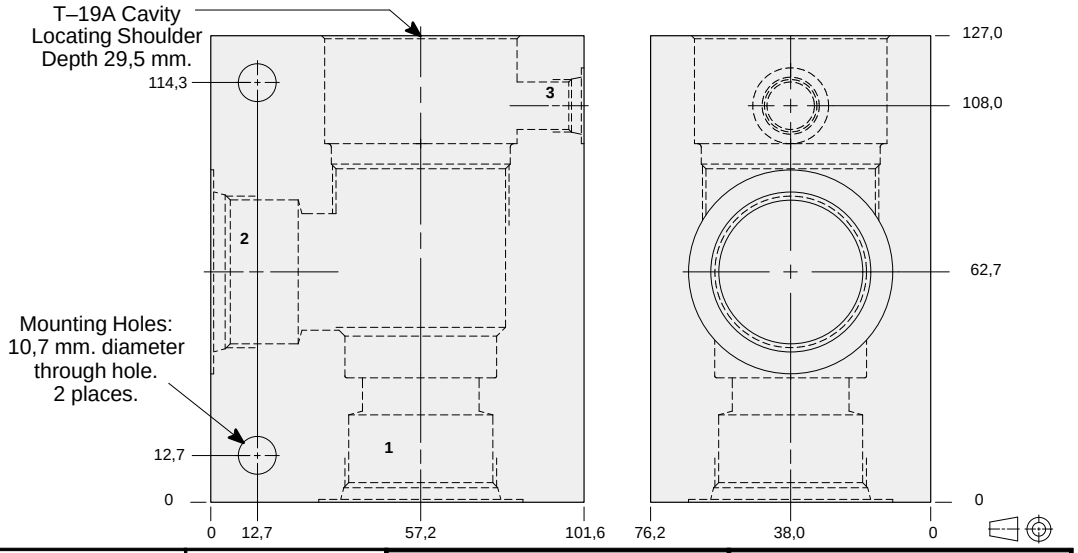

TYPICAL CARTRIDGES USED WITH THIS BODY

RVIA	- ***	Page	1.19
RSJC	- ***	Page	2.07
SQJB	- ***	Page	2.09
RSJE	- ***	Page	2.11
SCIA	- ***	Page	2.13
PBJB	- ***	Page	3.07
PBJC	- ***	Page	3.09
CBIA	- ***	Page	4.11
CBIG	- ***	Page	4.13
CBIH	- ***	Page	4.15
CKIB	- ***	Page	4.17
LOJC	- ***	Page	9.09
LKJC	- ***	Page	9.11
LPJC	- ***	Page	9.13
LRJC	- ***	Page	9.15
COJA	- ***	Page	10.13

Instructions for ordering complete cartridge and body assemblies. Page viii

Pressure ratings, material specifications. Page 11.02

Ports 1 & 2	*Port 3*	ALUMINIUM		SG IRON	
		Model Code	*List Price*	*Model Code*	*List Price*
1.00 NPTF	.25 NPTF	**KCE**		**KCE/S**	
1.25 NPTF	.25 NPTF	**KCF**		**KCF/S**	
SAE-16	SAE-6	**KCM**		**KCM/S**	
SAE-20	SAE-6	**KCN**		**KCN/S**	
1.00 BSPP	.25 BSPP	**KCX**		**KCX/S**	
1.25 BSPP	.25 BSPP	**KCY**		**KCY/S**	

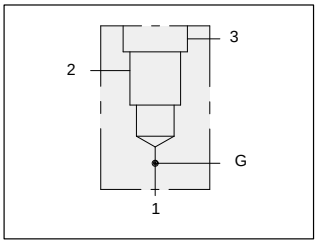

90 degree body with gauge port.

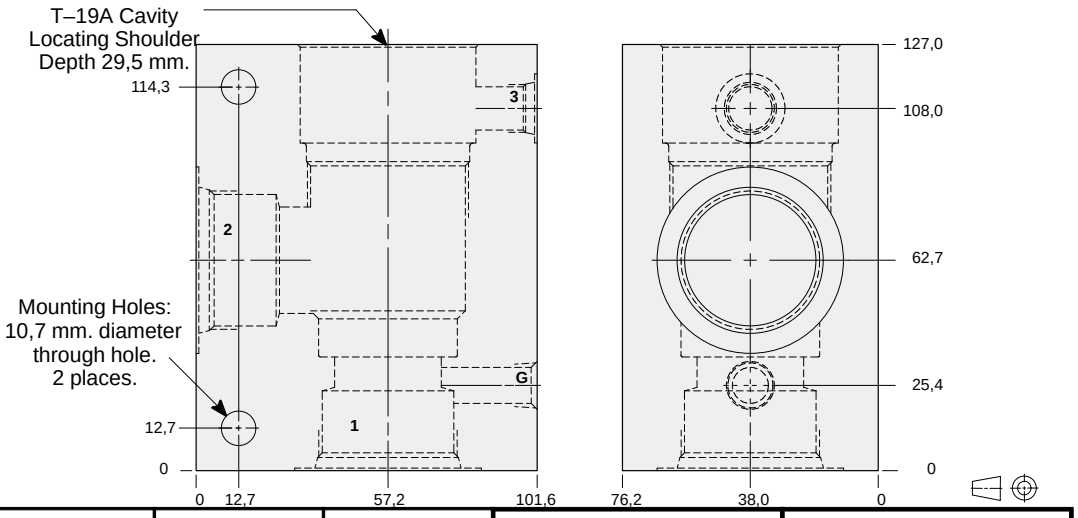

TYPICAL CARTRIDGES USED WITH THIS BODY

RVIA	- ***	Page	1.19
RSJC	- ***	Page	2.07
SQJB	- ***	Page	2.09
RSJE	- ***	Page	2.11
SCIA	- ***	Page	2.13
PBJB	- ***	Page	3.07
PBJC	- ***	Page	3.09
CBIA	- ***	Page	4.11
CBIG	- ***	Page	4.13
CBIH	- ***	Page	4.15
CKIB	- ***	Page	4.17
LOJC	- ***	Page	9.09
LKJC	- ***	Page	9.11
LPJC	- ***	Page	9.13
LRJC	- ***	Page	9.15
COJA	- ***	Page	10.13

Instructions for ordering complete cartridge and body assemblies. Page viii

Pressure ratings, material specifications. Page 11.02

Ports 1 & 2	*Port 3*	*Gauge Port*	ALUMINIUM		SG IRON	
			Model Code	*List Price*	*Model Code*	*List Price*
1.00 NPTF	.25 NPTF	.25 NPTF	**KFE**		**KFE/S**	
1.25 NPTF	.25 NPTF	.25 NPTF	**KFF**		**KFF/S**	
SAE-16	SAE-6	.25 NPTF	**KFM**		**KFM/S**	
SAE-20	SAE-6	.25 NPTF	**KFN**		**KFN/S**	
1.00 BSPP	.25 BSPP	.25 BSPP	**KFX**		**KFX/S**	
1.25 BSPP	.25 BSPP	.25 BSPP	**KFY**		**KFY/S**	

LINE MOUNT BODIES

- Aluminium rated to 210 bar and SG Iron rated to 350 bar.

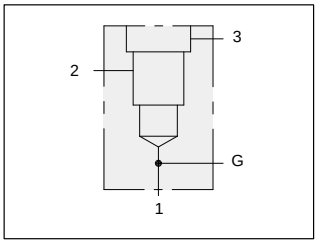

TYPICAL CARTRIDGES USED WITH THIS BODY

PPJB	- ***	Page	3.11
PPJC	- ***	Page	3.13
FRFA	- ***	Page	6.03

Instructions for ordering complete cartridge and body assemblies. Page viii

Pressure ratings, material specifications. Page 11.02

90 degree body with high capacity port 3 and gauge port.

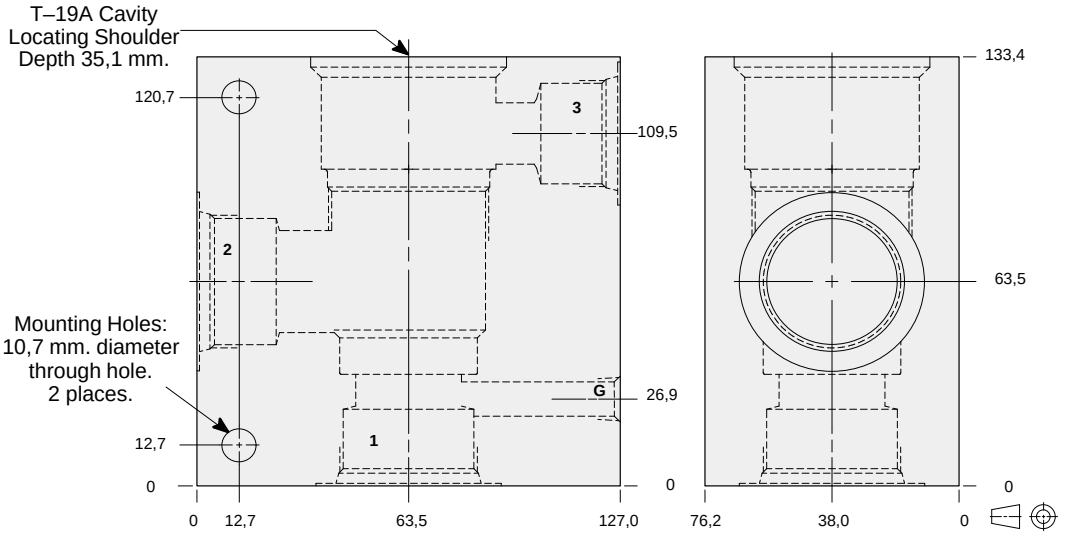

Ports 1 & 2	Port 3	Gauge Port	ALUMINIUM		SG IRON	
			Model Code	List Price	Model Code	List Price
1.00 NPTF	1.00 NPTF	.25 NPTF	**KEE**		**KEE/S**	
1.25 NPTF	1.00 NPTF	.25 NPTF	**KEF**		**KEF/S**	
SAE-16	SAE-16	.25 NPTF	**KEM**		**KEM/S**	
SAE-20	SAE-16	.25 NPTF	**KEN**		**KEN/S**	
1.00 BSPP	1.00 BSPP	.25 BSPP	**KEX**		**KEX/S**	
1.25 BSPP	1.00 BSPP	.25 BSPP	**KEY**		**KEY/S**	

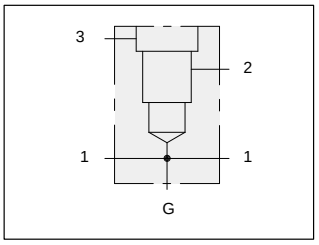

TYPICAL CARTRIDGES USED WITH THIS BODY

RVIA	- ***	Page	1.19
RSJC	- ***	Page	2.07
SQJB	- ***	Page	2.09
RSJE	- ***	Page	2.11
SCIA	- ***	Page	2.13
PBJB	- ***	Page	3.07
PBJC	- ***	Page	3.09

Instructions for ordering complete cartridge and body assemblies. Page viii

Pressure ratings, material specifications. Page 11.02

Through port body with gauge port.

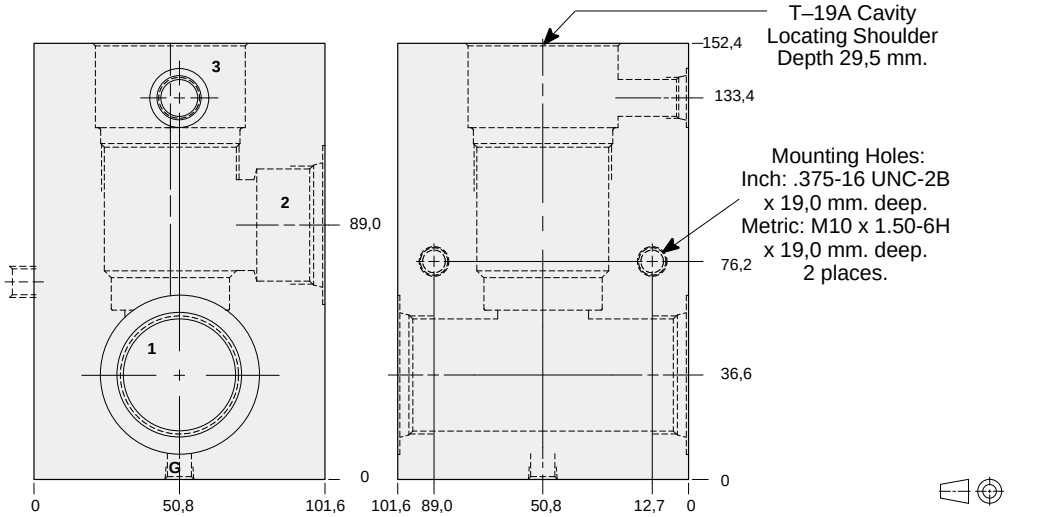

Mounting Hole Dimensions	Ports 1 & 2	Port 3	Gauge Port	ALUMINIUM		SG IRON	
				Model Code	List Price	Model Code	List Price
Inch	1.00 NPTF	.25 NPTF	.25 NPTF	**KHE**		**KHE/S**	
Inch	1.25 NPTF	.25 NPTF	.25 NPTF	**KHF**		**KHF/S**	
Inch	SAE-16	SAE-6	.25 NPTF	**KHM**		**KHM/S**	
Inch	SAE-20	SAE-6	.25 NPTF	**KHN**		**KHN/S**	
Metric	1.00 BSPP	.25 BSPP	.25 BSPP	**KHX**		**KHX/S**	
Metric	1.25 BSPP	.25 BSPP	.25 BSPP	**KHY**		**KHY/S**	

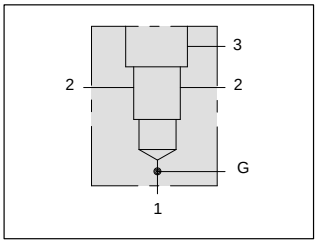

TYPICAL CARTRIDGES USED WITH THIS BODY

PBJB - *** Page 3.07
PBJC - *** Page 3.09

Instructions for ordering complete cartridge and body assemblies. Page viii

Pressure ratings, material specifications. Page 11.02

Through port body with gauge port for reducing applications.

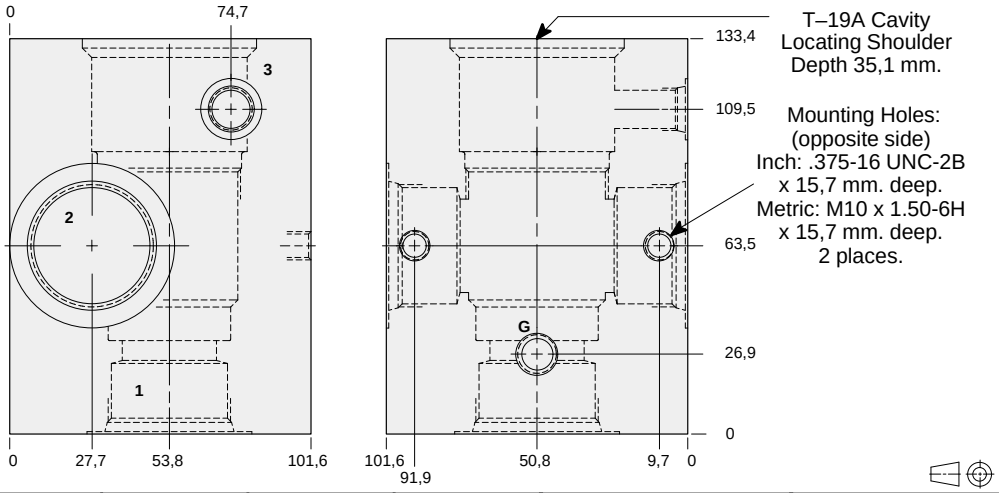

Mounting Hole Dimensions	*Ports 1 & 2*	*Port 3*	*Gauge Port*	ALUMINIUM		SG IRON	
				Model Code	*List Price*	*Model Code*	*List Price*
Inch	1.00 NPTF	.25 NPTF	.25 NPTF	**WTO**		**WTO/S**	
Inch	1.25 NPTF	.25 NPTF	.25 NPTF	**WTP**		**WTP/S**	
Inch	SAE-16	SAE-6	.25 NPTF	**WTQ**		**WTQ/S**	
Inch	SAE-20	SAE-6	.25 NPTF	**WTR**		**WTR/S**	
Metric	1.00 BSPP	.25 BSPP	.25 BSPP	**WTS**		**WTS/S**	
Metric	1.25 BSPP	.25 BSPP	.25 BSPP	**WTT**		**WTT/S**	

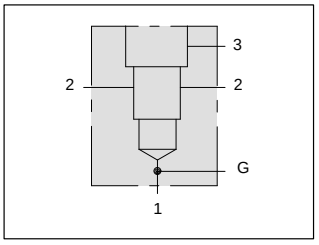

TYPICAL CARTRIDGES USED WITH THIS BODY

PPJB - *** Page 3.11
PPJC - *** Page 3.13
FRFA - *** Page 6.03

Instructions for ordering complete cartridge and body assemblies. Page viii

Pressure ratings, material specifications. Page 11.02

Through port body with high capacity port 3 and gauge port for reducing/relieving applications.

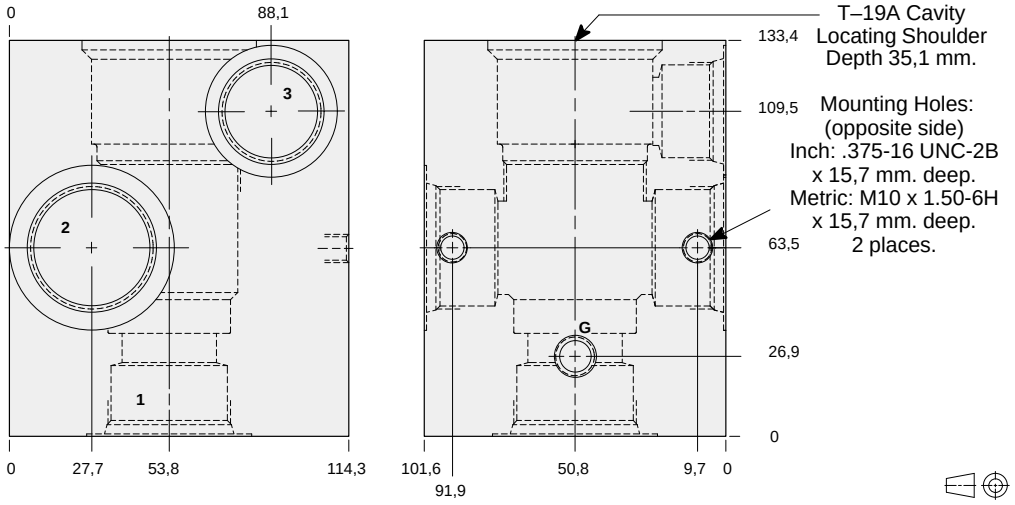

Mounting Hole Dimensions	*Ports 1 & 2*	*Port 3*	*Gauge Port*	ALUMINIUM		SG IRON	
				Model Code	*List Price*	*Model Code*	*List Price*
Inch	1.00 NPTF	1.00 NPTF	.25 NPTF	**WTU**		**WTU/S**	
Inch	1.25 NPTF	1.00 NPTF	.25 NPTF	**WTV**		**WTV/S**	
Inch	SAE-16	SAE-16	.25 NPTF	**WTW**		**WTW/S**	
Inch	SAE-20	SAE-16	.25 NPTF	**WTX**		**WTX/S**	
Metric	1.00 BSPP	1.00 BSPP	.25 BSPP	**WTY**		**WTY/S**	
Metric	1.25 BSPP	1.00 BSPP	.25 BSPP	**WTZ**		**WTZ/S**	

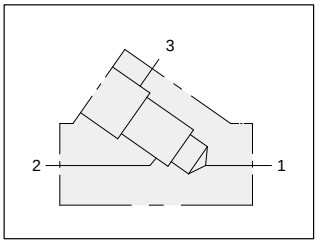

TYPICAL CARTRIDGES USED WITH THIS BODY

RVIA	- ***	Page	1.19
RSJC	- ***	Page	2.07
SQJB	- ***	Page	2.09
RSJE	- ***	Page	2.11
SCIA	- ***	Page	2.13
PBJB	- ***	Page	3.07
PBJC	- ***	Page	3.09
CBIA	- ***	Page	4.11
CBIG	- ***	Page	4.13
CBIH	- ***	Page	4.15
CKIB	- ***	Page	4.17
LOJC	- ***	Page	9.09
LKJC	- ***	Page	9.11
LPJC	- ***	Page	9.13
LRJC	- ***	Page	9.15
COJA	- ***	Page	10.13

Instructions for ordering complete cartridge and body assemblies. Page viii

Pressure ratings, material specifications. Page 11.02

SAE Specifications. Page 11.03

Inline 1.50” SAE Code 61 flange port body.

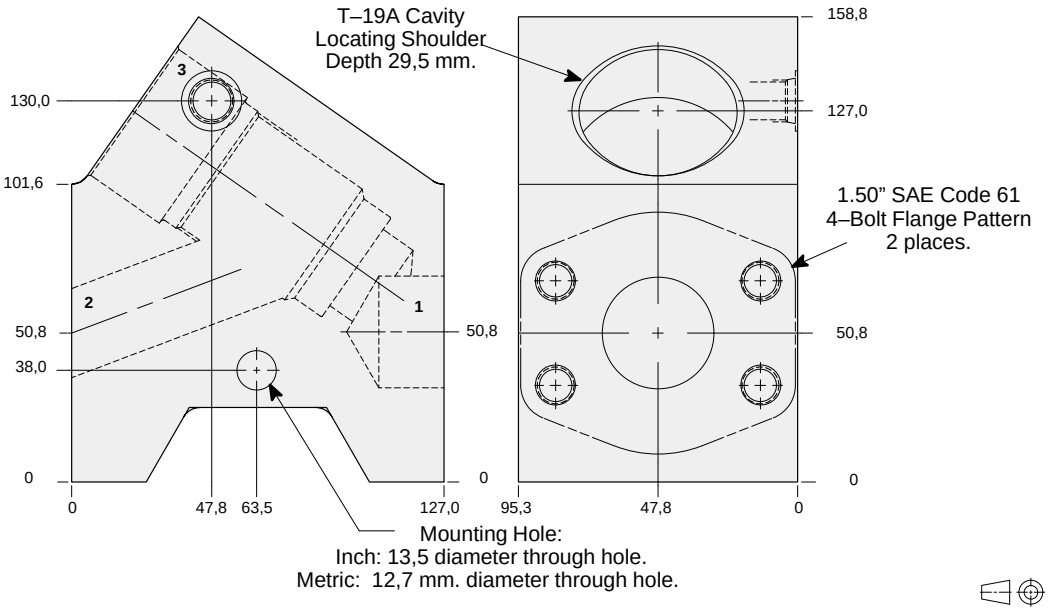

Mounting Hole Dimensions	*Port 3*	ALUMINIUM		SG IRON	
		Model Code	*List Price*	*Model Code*	*List Price*
Inch	SAE-6	**ZLQ**		**ZLQ/S**	
Metric	.25 BSPP	**ZLQ/M**		**ZLQ/T**	

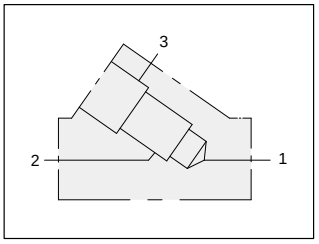

TYPICAL CARTRIDGES USED WITH THIS BODY

RVIA	- ***	Page	1.19
RSJC	- ***	Page	2.07
SQJB	- ***	Page	2.09
RSJE	- ***	Page	2.11
SCIA	- ***	Page	2.13
PBJB	- ***	Page	3.07
PBJC	- ***	Page	3.09
CBIA	- ***	Page	4.11
CBIG	- ***	Page	4.13
CBIH	- ***	Page	4.15
CKIB	- ***	Page	4.17
LOJC	- ***	Page	9.09
LKJC	- ***	Page	9.11
LPJC	- ***	Page	9.13
LRJC	- ***	Page	9.15
COJA	- ***	Page	10.13

Instructions for ordering complete cartridge and body assemblies. Page viii

Pressure ratings, material specifications. Page 11.02

SAE Specifications. Page 11.03

Inline 2.00” SAE Code 61 flange port body.

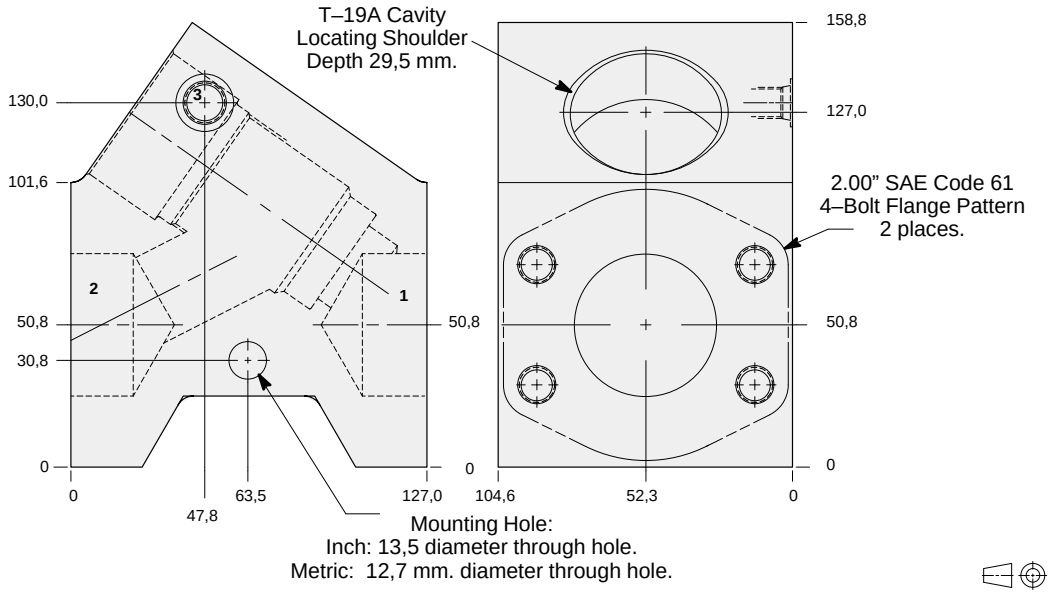

Mounting Hole Dimensions	*Port 3*	ALUMINIUM		SG IRON	
		Model Code	*List Price*	*Model Code*	*List Price*
Inch	SAE-6	**ZLP**		**ZLP/S**	
Metric	.25 BSPP	**ZLP/M**		**ZLP/T**	

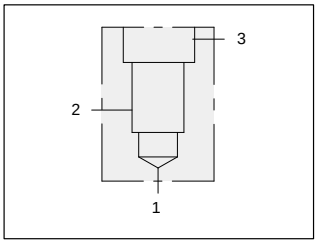

90 degree 1.00” SAE Code 61 flange port body.

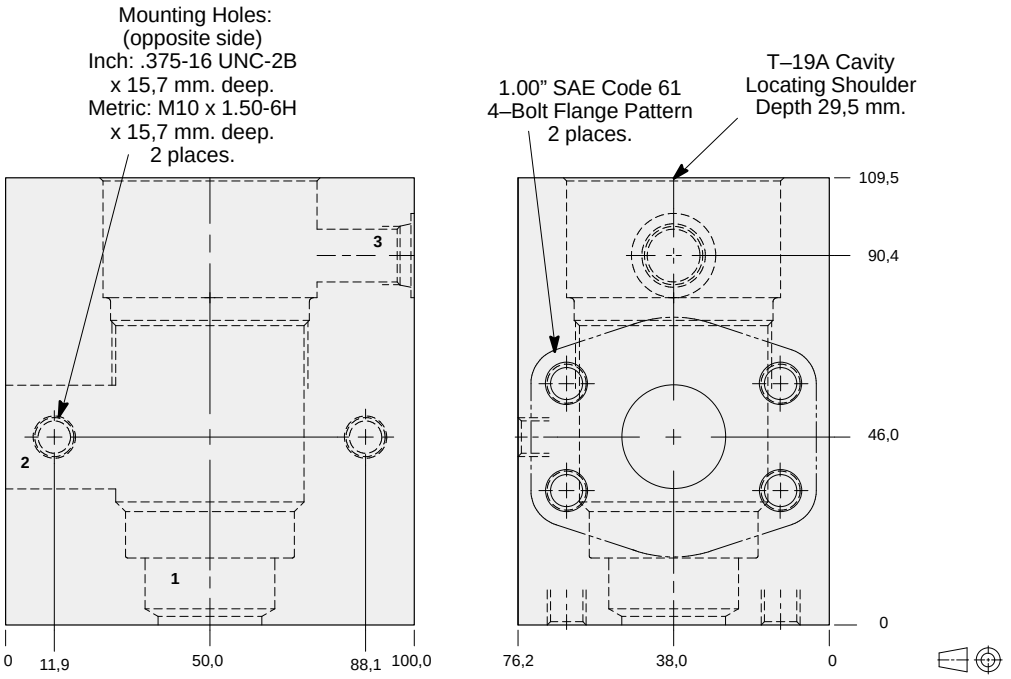

Mounting Hole Dimensions	*Port 3*	ALUMINIUM		SG IRON	
		Model Code	*List Price*	*Model Code*	*List Price*
Inch	SAE-6	**KCP**		**KCP/S**	
Metric	.25 BSPP	**KCP/M**		**KCP/T**	

TYPICAL CARTRIDGES USED WITH THIS BODY

RVIA	- ***	Page	1.19
RSJC	- ***	Page	2.07
SQJB	- ***	Page	2.09
RSJE	- ***	Page	2.11
SCIA	- ***	Page	2.13
PBJB	- ***	Page	3.07
PBJC	- ***	Page	3.09
CBIA	- ***	Page	4.11
CBIG	- ***	Page	4.13
CBIH	- ***	Page	4.15
CKIB	- ***	Page	4.17
LOJC	- ***	Page	9.09
LKJC	- ***	Page	9.11
LPJC	- ***	Page	9.13
LRJC	- ***	Page	9.15
COJA	- ***	Page	10.13

Instructions for ordering complete cartridge and body assemblies. Page viii

Pressure ratings, material specifications. Page 11.02

SAE Specifications. Page 11.03

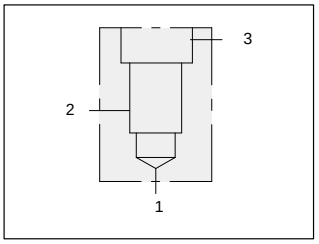

90 degree 1.00” SAE Code 62 flange port body.

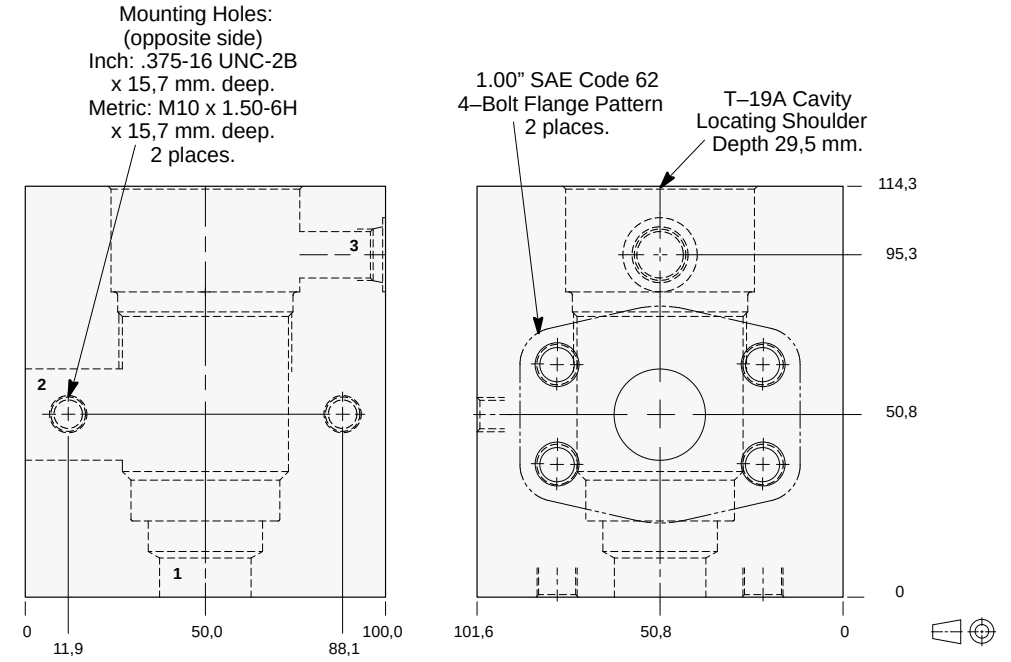

Mounting Hole Dimensions	*Port 3*	ALUMINIUM		SG IRON	
		Model Code	*List Price*	*Model Code*	*List Price*
Inch	SAE-6	**KC4**		**KC4/S**	
Metric	.25 BSPP	**KC4/M**		**KC4/T**	

TYPICAL CARTRIDGES USED WITH THIS BODY

RVIA	- ***	Page	1.19
RSJC	- ***	Page	2.07
SQJB	- ***	Page	2.09
RSJE	- ***	Page	2.11
SCIA	- ***	Page	2.13
PBJB	- ***	Page	3.07
PBJC	- ***	Page	3.09
CBIA	- ***	Page	4.11
CBIG	- ***	Page	4.13
CBIH	- ***	Page	4.15
CKIB	- ***	Page	4.17
LOJC	- ***	Page	9.09
LKJC	- ***	Page	9.11
LPJC	- ***	Page	9.13
LRJC	- ***	Page	9.15
COJA	- ***	Page	10.13

Instructions for ordering complete cartridge and body assemblies. Page viii

Pressure ratings, material specifications. Page 11.02

SAE Specifications. Page 11.03

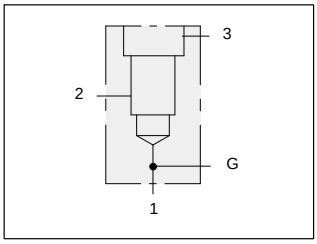

90 degree 1.00” SAE Code 61 flange port body with gauge port.

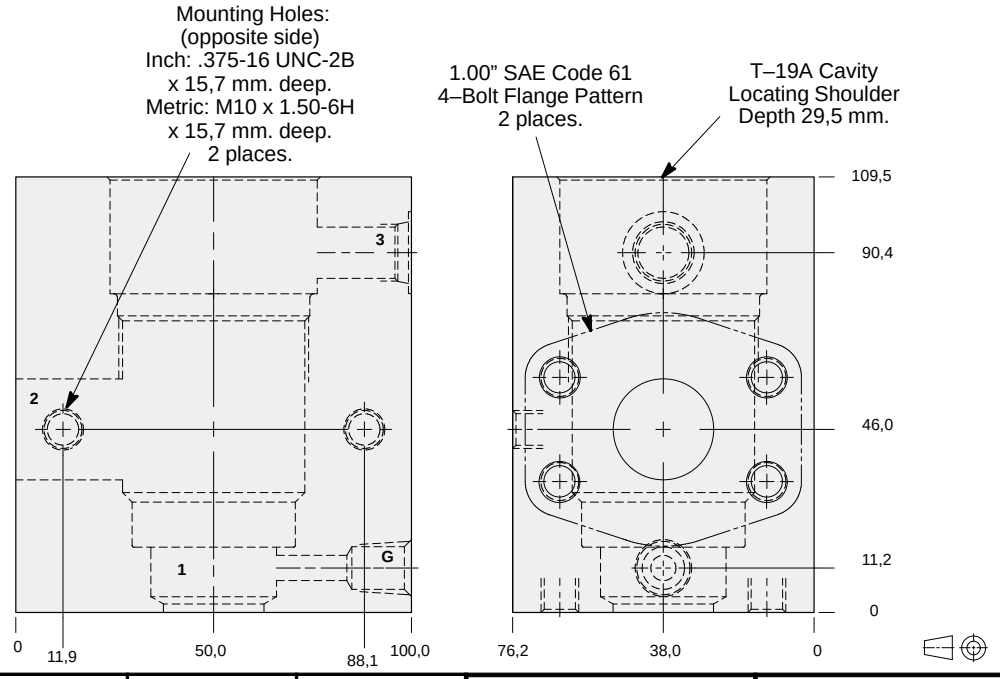

Mounting Hole Dimensions	*Port 3*	*Gauge Port*	ALUMINIUM		SG IRON	
			Model Code	*List Price*	*Model Code*	*List Price*
Inch	SAE-6	.25 NPTF	**KFP**		**KFP/S**	
Metric	.25 BSPP	.25 BSPP	**KFP/M**		**KFP/T**	

TYPICAL CARTRIDGES USED WITH THIS BODY

RVIA	- ***	Page	1.19
RSJC	- ***	Page	2.07
SQJB	- ***	Page	2.09
RSJE	- ***	Page	2.11
SCIA	- ***	Page	2.13
PBJB	- ***	Page	3.07
PBJC	- ***	Page	3.09
CBIA	- ***	Page	4.11
CBIG	- ***	Page	4.13
CBIH	- ***	Page	4.15
CKIB	- ***	Page	4.17
LOJC	- ***	Page	9.09
LKJC	- ***	Page	9.11
LPJC	- ***	Page	9.13
LRJC	- ***	Page	9.15
COJA	- ***	Page	10.13

Instructions for ordering complete cartridge and body assemblies. Page viii

Pressure ratings, material specifications. Page 11.02

SAE Specifications. Page 11.03

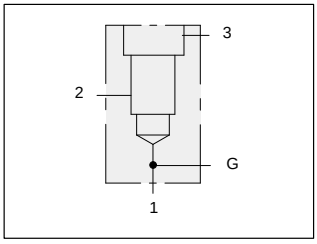

90 degree 1.00” SAE Code 62 flange port body with gauge port.

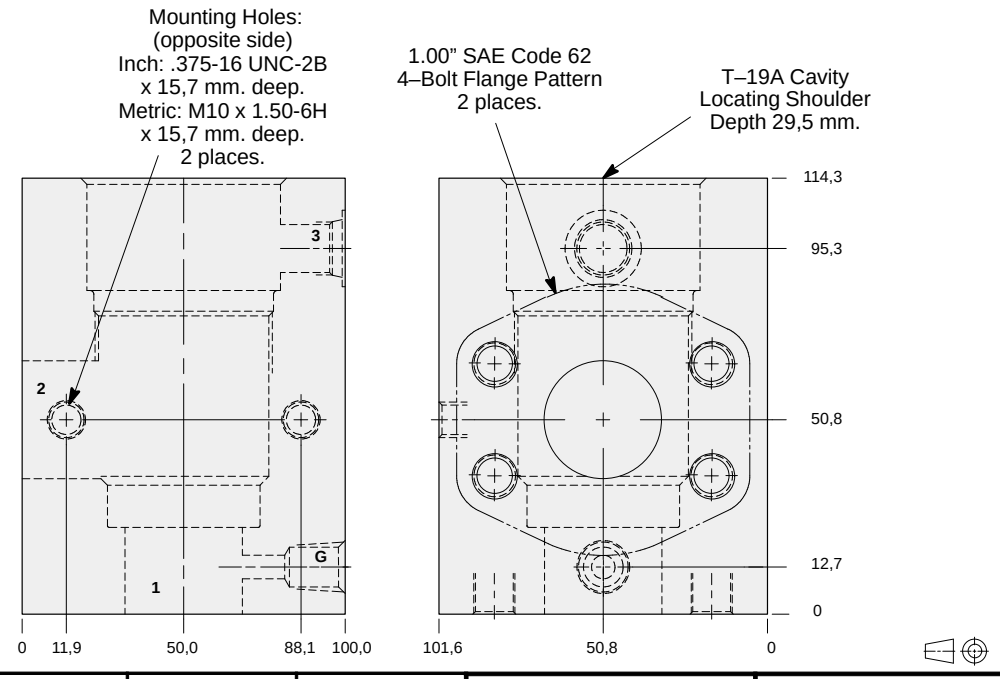

Mounting Hole Dimensions	*Port 3*	*Gauge Port*	ALUMINIUM		SG IRON	
			Model Code	*List Price*	*Model Code*	*List Price*
Inch	SAE-6	.25 NPTF	**KF4**		**KF4/S**	
Metric	.25 BSPP	.25 BSPP	**KF4/M**		**KF4/T**	

TYPICAL CARTRIDGES USED WITH THIS BODY

RVIA	- ***	Page	1.19
RSJC	- ***	Page	2.07
SQJB	- ***	Page	2.09
RSJE	- ***	Page	2.11
SCIA	- ***	Page	2.13
PBJB	- ***	Page	3.07
PBJC	- ***	Page	3.09
CBIA	- ***	Page	4.11
CBIG	- ***	Page	4.13
CBIH	- ***	Page	4.15
CKIB	- ***	Page	4.17
LOJC	- ***	Page	9.09
LKJC	- ***	Page	9.11
LPJC	- ***	Page	9.13
LRJC	- ***	Page	9.15
COJA	- ***	Page	10.13

Instructions for ordering complete cartridge and body assemblies. Page viii

Pressure ratings, material specifications. Page 11.02

SAE Specifications. Page 11.03

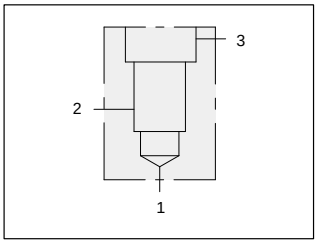

90 degree 1.25” SAE Code 61 flange port body.

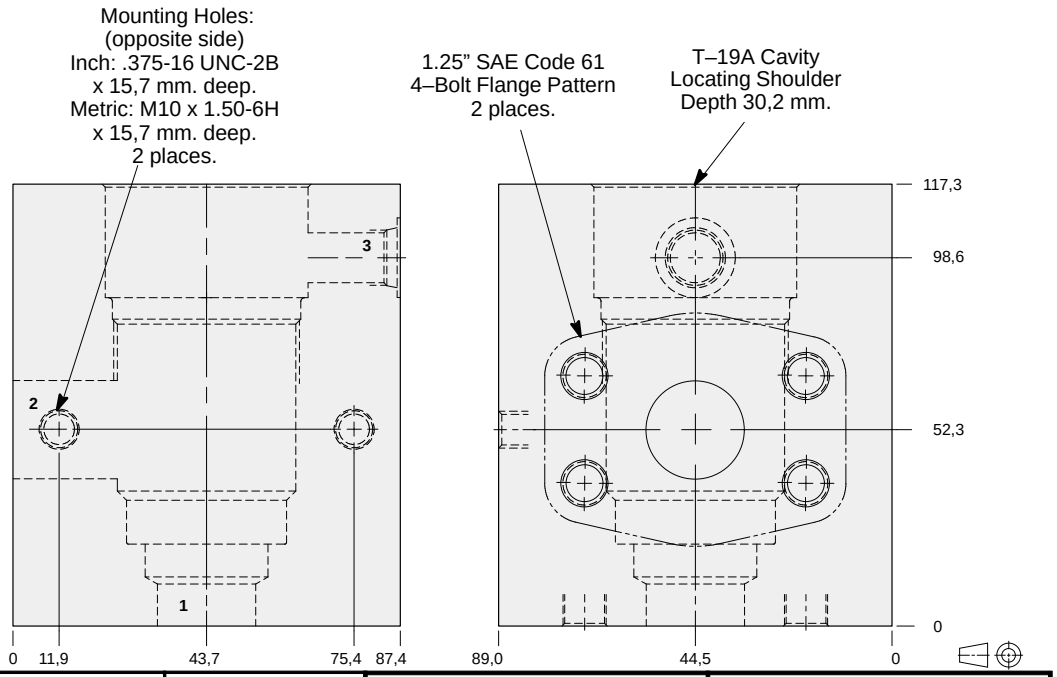

Mounting Hole Dimensions	Port 3	ALUMINIUM		SG IRON	
		Model Code	List Price	Model Code	List Price
Inch	SAE-6	**KCQ**		**KCQ/S**	
Metric	.25 BSPP	**KCQ/M**		**KCQ/T**	

TYPICAL CARTRIDGES USED WITH THIS BODY

RVIA	- ***	Page	1.19
RSJC	- ***	Page	2.07
SQJB	- ***	Page	2.09
RSJE	- ***	Page	2.11
SCIA	- ***	Page	2.13
PBJB	- ***	Page	3.07
PBJC	- ***	Page	3.09
CBIA	- ***	Page	4.11
CBIG	- ***	Page	4.13
CBIH	- ***	Page	4.15
CKIB	- ***	Page	4.17
LOJC	- ***	Page	9.09
LKJC	- ***	Page	9.11
LPJC	- ***	Page	9.13
LRJC	- ***	Page	9.15
COJA	- ***	Page	10.13

Instructions for ordering complete cartridge and body assemblies. Page viii

Pressure ratings, material specifications. Page 11.02

SAE Specifications. Page 11.03

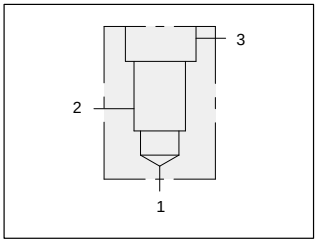

90 degree 1.25” SAE Code 62 flange port body.

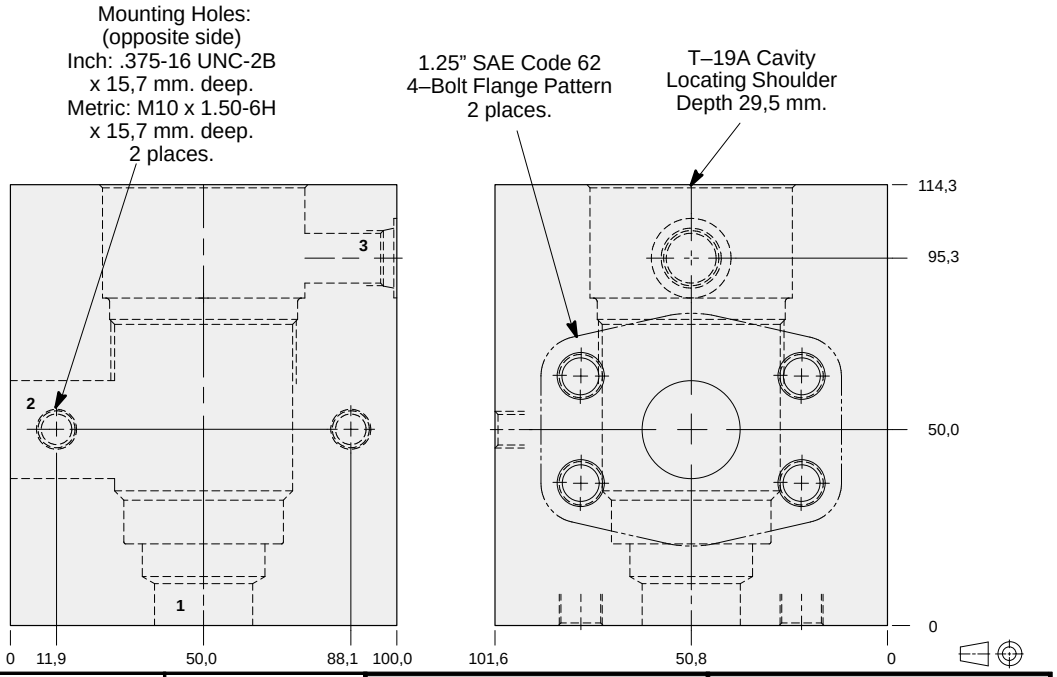

Mounting Hole Dimensions	Port 3	ALUMINIUM		SG IRON	
		Model Code	List Price	Model Code	List Price
Inch	SAE-6	**KC5**		**KC5/S**	
Metric	.25 BSPP	**KC5/M**		**KC5/T**	

TYPICAL CARTRIDGES USED WITH THIS BODY

RVIA	- ***	Page	1.19
RSJC	- ***	Page	2.07
SQJB	- ***	Page	2.09
RSJE	- ***	Page	2.11
SCIA	- ***	Page	2.13
PBJB	- ***	Page	3.07
PBJC	- ***	Page	3.09
CBIA	- ***	Page	4.11
CBIG	- ***	Page	4.13
CBIH	- ***	Page	4.15
CKIB	- ***	Page	4.17
LOJC	- ***	Page	9.09
LKJC	- ***	Page	9.11
LPJC	- ***	Page	9.13
LRJC	- ***	Page	9.15
COJA	- ***	Page	10.13

Instructions for ordering complete cartridge and body assemblies. Page viii

Pressure ratings, material specifications. Page 11.02

SAE Specifications. Page 11.03

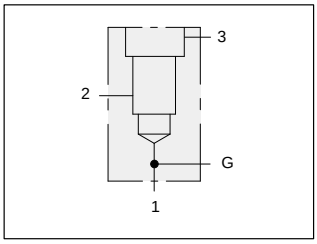

90 degree 1.25” SAE Code 61 flange port body with gauge port.

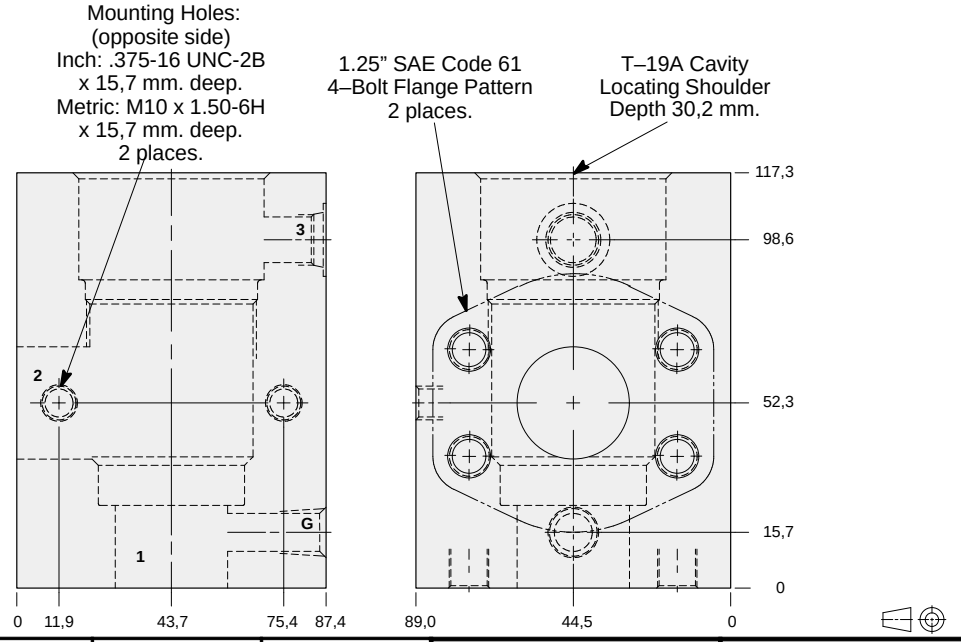

Mounting Hole Dimensions	Port 3	Gauge Port	ALUMINIUM		SG IRON	
			Model Code	List Price	Model Code	List Price
Inch	SAE-6	.25 NPTF	**KFQ**		**KFQ/S**	
Metric	.25 BSPP	.25 BSPP	**KFQ/M**		**KFQ/T**	

TYPICAL CARTRIDGES USED WITH THIS BODY

RVIA	- ***	Page	1.19
RSJC	- ***	Page	2.07
SQJB	- ***	Page	2.09
RSJE	- ***	Page	2.11
SCIA	- ***	Page	2.13
PBJB	- ***	Page	3.07
PBJC	- ***	Page	3.09
CBIA	- ***	Page	4.11
CBIG	- ***	Page	4.13
CBIH	- ***	Page	4.15
CKIB	- ***	Page	4.17
LOJC	- ***	Page	9.09
LKJC	- ***	Page	9.11
LPJC	- ***	Page	9.13
LRJC	- ***	Page	9.15
COJA	- ***	Page	10.13

Instructions for ordering complete cartridge and body assemblies. Page viii

Pressure ratings, material specifications. Page 11.02

SAE Specifications. Page 11.03

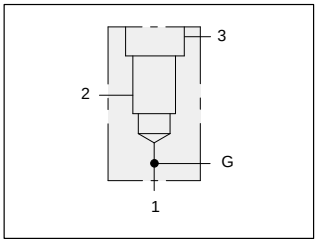

90 degree 1.25” SAE Code 62 flange port body with gauge port.

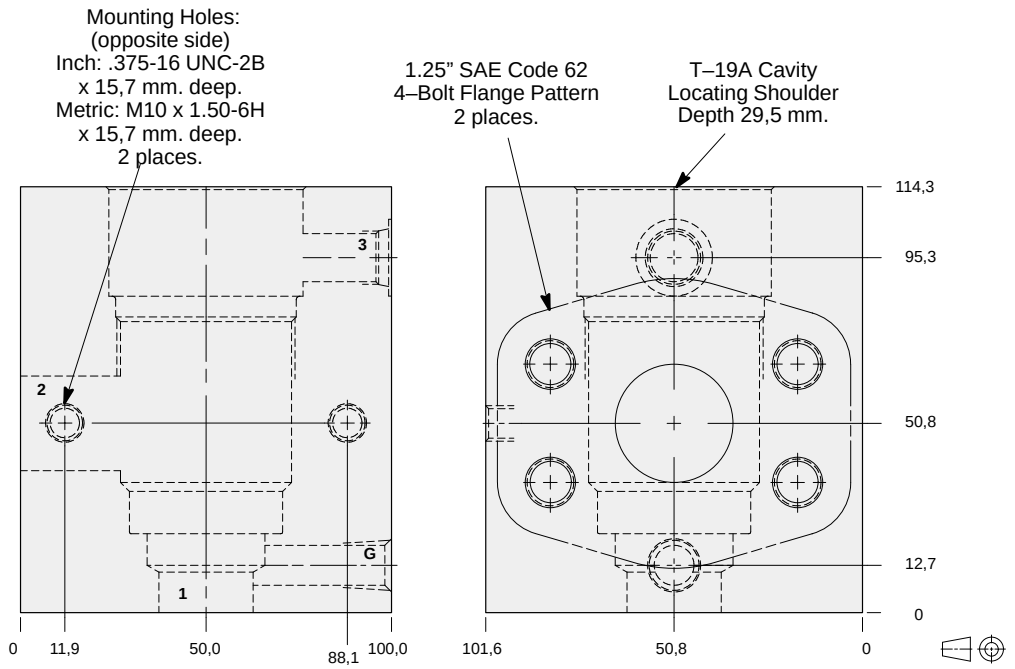

Mounting Hole Dimensions	Port 3	Gauge Port	ALUMINIUM		SG IRON	
			Model Code	List Price	Model Code	List Price
Inch	SAE-6	.25 NPTF	**KF5**		**KF5/S**	
Metric	.25 BSPP	.25 BSPP	**KF5/M**		**KF5/T**	

TYPICAL CARTRIDGES USED WITH THIS BODY

RVIA	- ***	Page	1.19
RSJC	- ***	Page	2.07
SQJB	- ***	Page	2.09
RSJE	- ***	Page	2.11
SCIA	- ***	Page	2.13
PBJB	- ***	Page	3.07
PBJC	- ***	Page	3.09
CBIA	- ***	Page	4.11
CBIG	- ***	Page	4.13
CBIH	- ***	Page	4.15
CKIB	- ***	Page	4.17
LOJC	- ***	Page	9.09
LKJC	- ***	Page	9.11
LPJC	- ***	Page	9.13
LRJC	- ***	Page	9.15
COJA	- ***	Page	10.13

Instructions for ordering complete cartridge and body assemblies. Page viii

Pressure ratings, material specifications. Page 11.02

SAE Specifications. Page 11.03

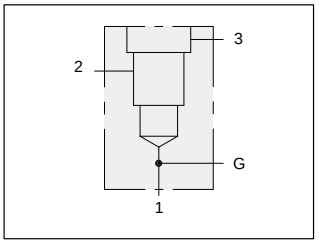

90 degree 1.25” SAE Code 61 flange port body with high capacity port 3 and gauge port.

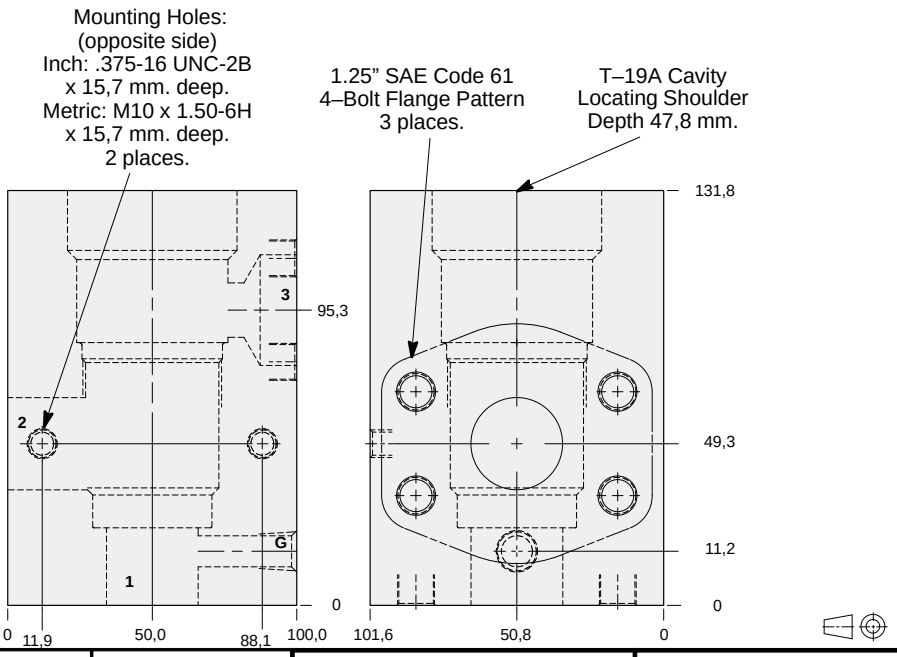

TYPICAL CARTRIDGES USED WITH THIS BODY

PPJB	- ***	Page	3.11
PPJC	- ***	Page	3.13
FRFA	- ***	Page	6.03

Instructions for ordering complete cartridge and body assemblies.	Page	viii
Pressure ratings, material specifications.	Page	11.02
SAE Specifications.	Page	11.03

Mounting Hole Dimensions	*Gauge Port*	ALUMINIUM		SG IRON	
		Model Code	*List Price*	*Model Code*	*List Price*
Inch	.25 NPTF	**KEQ**		**KEQ/S**	
Metric	.25 BSPP	**KEQ/M**		**KEQ/T**	

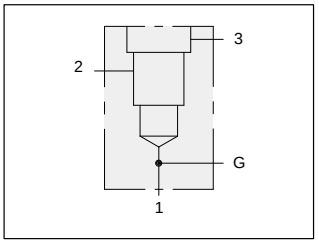

90 degree 1.25” SAE Code 62 flange port body with high capacity port 3 and gauge port.

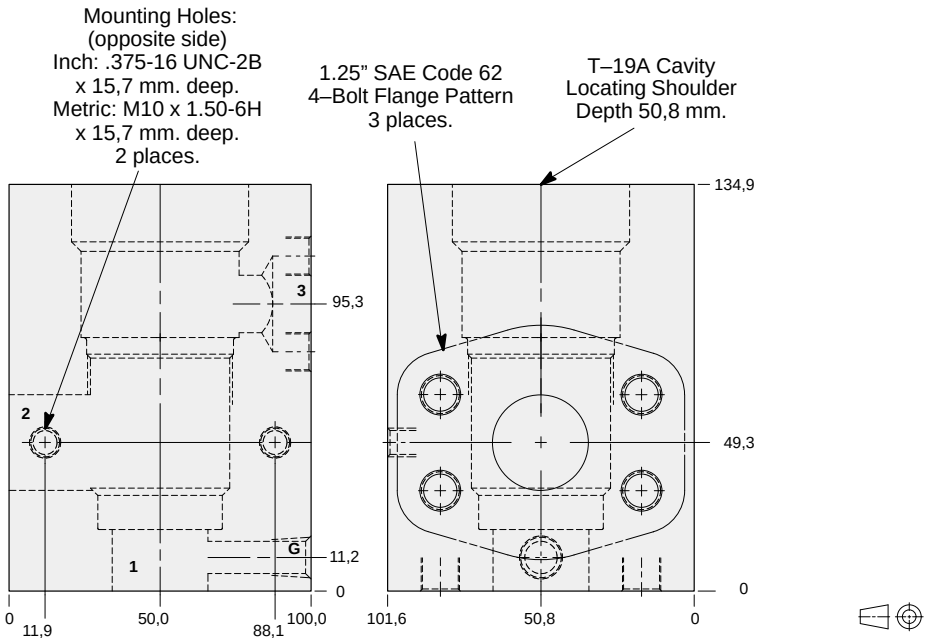

TYPICAL CARTRIDGES USED WITH THIS BODY

PPJB	- ***	Page	3.11
PPJC	- ***	Page	3.13
FRFA	- ***	Page	6.03

Instructions for ordering complete cartridge and body assemblies.	Page	viii
Pressure ratings, material specifications.	Page	11.02
SAE Specifications.	Page	11.03

Mounting Hole Dimensions	*Gauge Port*	ALUMINIUM		SG IRON	
		Model Code	*List Price*	*Model Code*	*List Price*
Inch	.25 NPTF	**KE5**		**KE5/S**	
Metric	.25 BSPP	**KE5/M**		**KE5/T**	

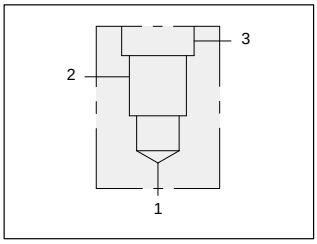

90 degree 1.50” SAE Code 61 flange port body.

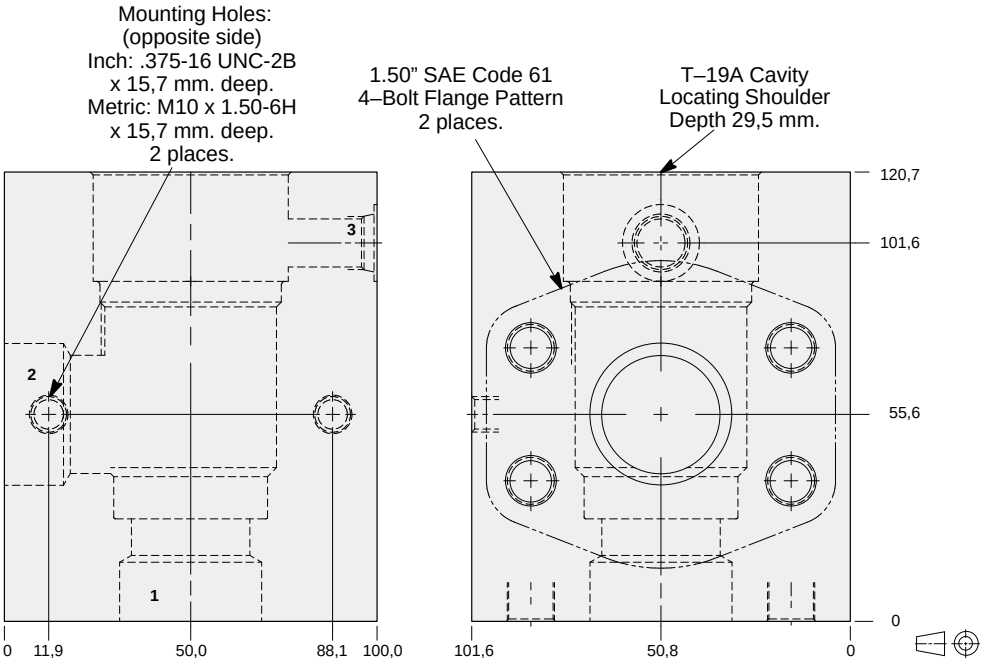

Mounting Hole Dimensions	*Port 3*	ALUMINIUM		SG IRON	
		Model Code	*List Price*	*Model Code*	*List Price*
Inch	SAE-6	**KCR**		**KCR/S**	
Metric	.25 BSPP	**KCR/M**		**KCR/T**	

TYPICAL CARTRIDGES USED WITH THIS BODY

RVIA	- ***	Page	1.19
RSJC	- ***	Page	2.07
SQJB	- ***	Page	2.09
RSJE	- ***	Page	2.11
SCIA	- ***	Page	2.13
PBJB	- ***	Page	3.07
PBJC	- ***	Page	3.09
CBIA	- ***	Page	4.11
CBIG	- ***	Page	4.13
CBIH	- ***	Page	4.15
CKIB	- ***	Page	4.17
LOJC	- ***	Page	9.09
LKJC	- ***	Page	9.11
LPJC	- ***	Page	9.13
LRJC	- ***	Page	9.15
COJA	- ***	Page	10.13

Instructions for ordering complete cartridge and body assemblies. Page viii

Pressure ratings, material specifications. Page 11.02

SAE Specifications. Page 11.03

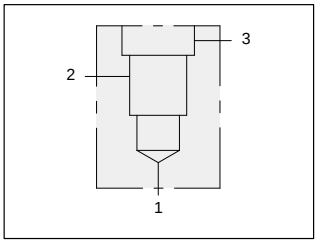

90 degree 1.50” SAE Code 62 flange port body.

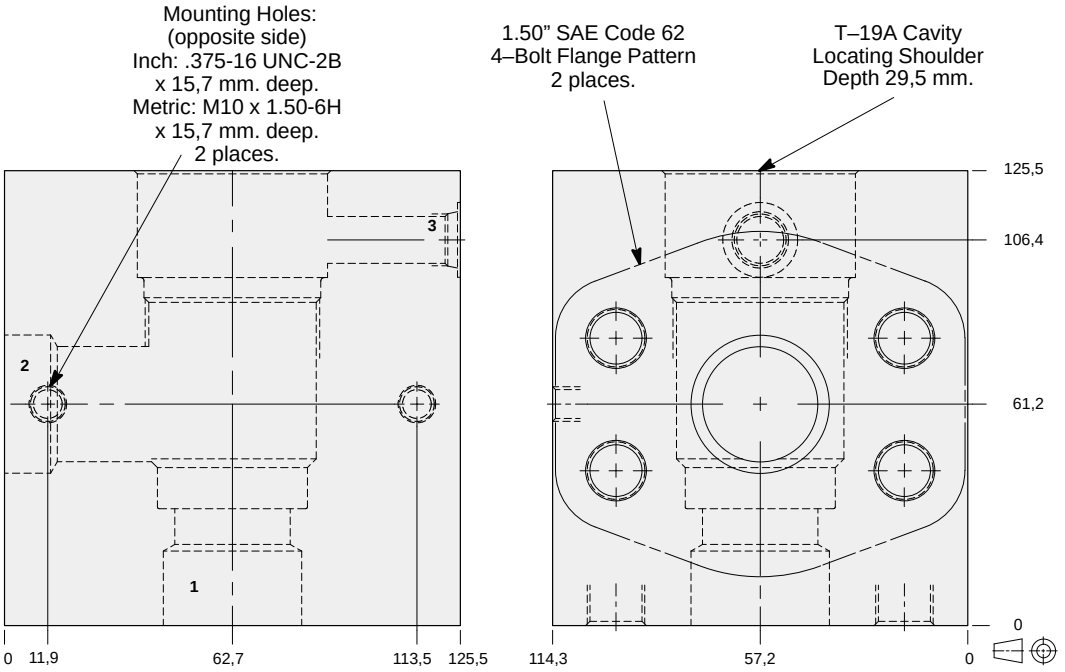

Mounting Hole Dimensions	*Port 3*	ALUMINIUM		SG IRON	
		Model Code	*List Price*	*Model Code*	*List Price*
Inch	SAE-6	**KC6**		**KC6/S**	
Metric	.25 BSPP	**KC6/M**		**KC6/T**	

TYPICAL CARTRIDGES USED WITH THIS BODY

RVIA	- ***	Page	1.19
RSJC	- ***	Page	2.07
SQJB	- ***	Page	2.09
RSJE	- ***	Page	2.11
SCIA	- ***	Page	2.13
PBJB	- ***	Page	3.07
PBJC	- ***	Page	3.09
CBIA	- ***	Page	4.11
CBIG	- ***	Page	4.13
CBIH	- ***	Page	4.15
CKIB	- ***	Page	4.17
LOJC	- ***	Page	9.09
LKJC	- ***	Page	9.11
LPJC	- ***	Page	9.13
LRJC	- ***	Page	9.15
COJA	- ***	Page	10.13

Instructions for ordering complete cartridge and body assemblies. Page viii

Pressure ratings, material specifications. Page 11.02

SAE Specifications. Page 11.03

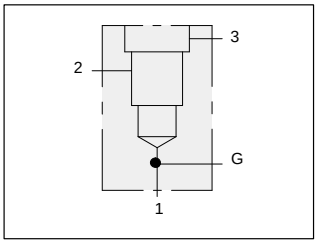

90 degree 1.50” SAE Code 61 flange port body with gauge port.

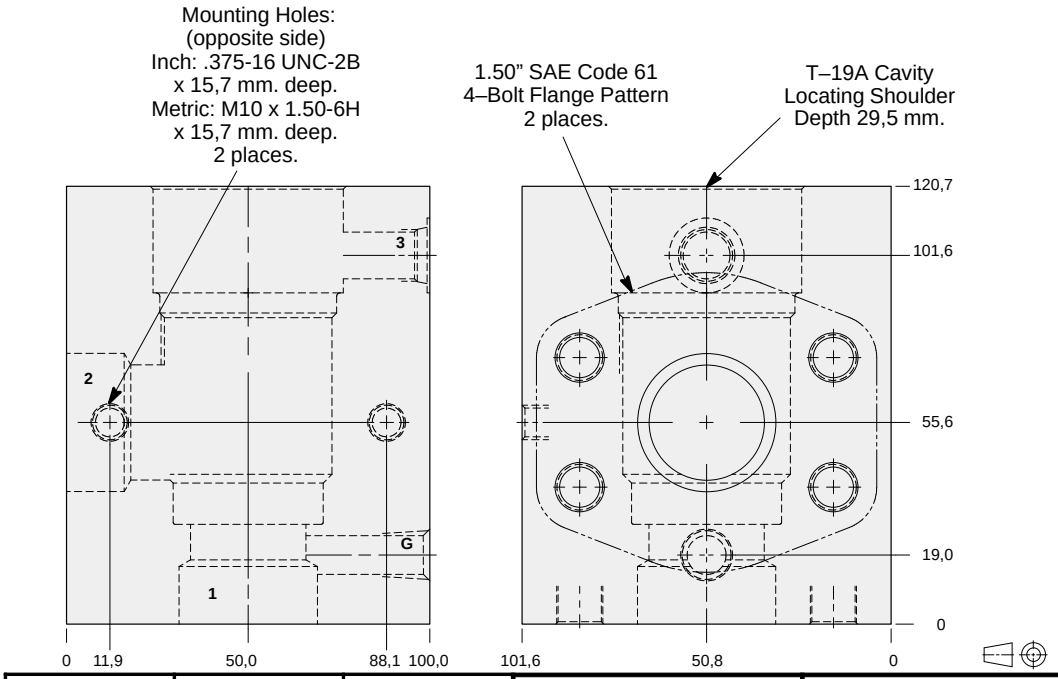

TYPICAL CARTRIDGES USED WITH THIS BODY

RVIA	- ***	Page	1.19
RSJC	- ***	Page	2.07
SQJB	- ***	Page	2.09
RSJE	- ***	Page	2.11
SCIA	- ***	Page	2.13
PBJB	- ***	Page	3.07
PBJC	- ***	Page	3.09
CBIA	- ***	Page	4.11
CBIG	- ***	Page	4.13
CBIH	- ***	Page	4.15
CKIB	- ***	Page	4.17
LOJC	- ***	Page	9.09
LKJC	- ***	Page	9.11
LPJC	- ***	Page	9.13
LRJC	- ***	Page	9.15
COJA	- ***	Page	10.13

Instructions for ordering complete cartridge and body assemblies. Page viii

Pressure ratings, material specifications. Page 11.02

SAE Specifications. Page 11.03

Mounting Hole Dimensions	*Port 3*	*Gauge Port*	ALUMINIUM		SG IRON	
			Model Code	*List Price*	*Model Code*	*List Price*
Inch	SAE-6	.25 NPTF	**KFR**		**KFR/S**	
Metric	.25 BSPP	.25 BSPP	**KFR/M**		**KFR/T**	

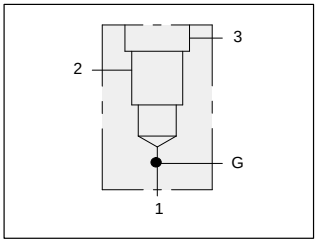

90 degree 1.50” SAE Code 62 flange port body with gauge port.

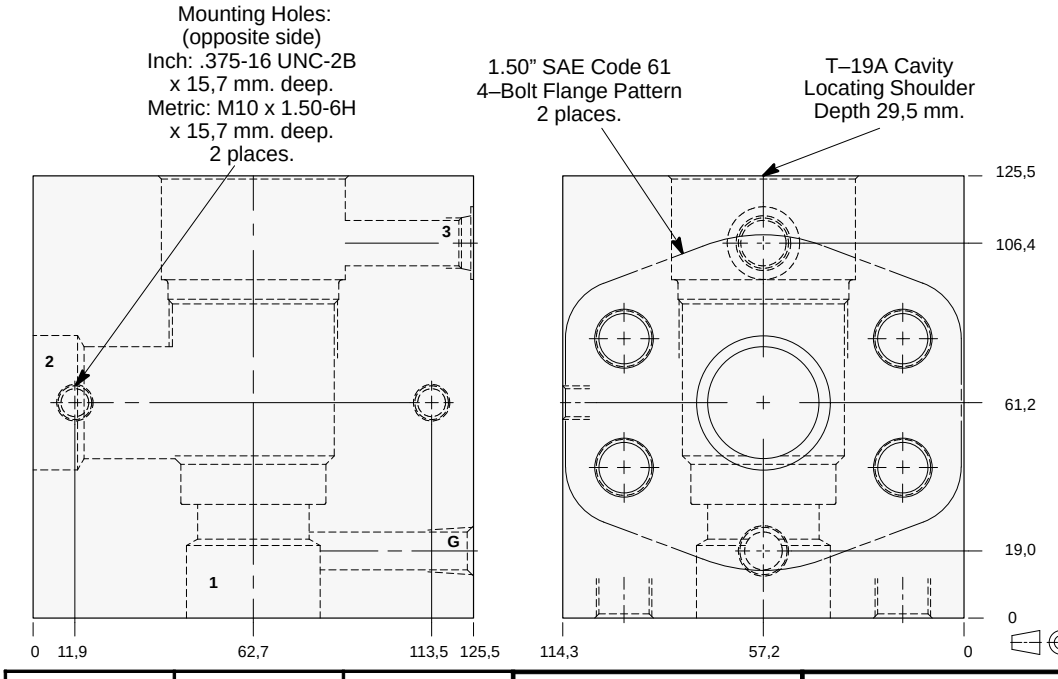

TYPICAL CARTRIDGES USED WITH THIS BODY

RVIA	- ***	Page	1.19
RSJC	- ***	Page	2.07
SQJB	- ***	Page	2.09
RSJE	- ***	Page	2.11
SCIA	- ***	Page	2.13
PBJB	- ***	Page	3.07
PBJC	- ***	Page	3.09
CBIA	- ***	Page	4.11
CBIG	- ***	Page	4.13
CBIH	- ***	Page	4.15
CKIB	- ***	Page	4.17
LOJC	- ***	Page	9.09
LKJC	- ***	Page	9.11
LPJC	- ***	Page	9.13
LRJC	- ***	Page	9.15
COJA	- ***	Page	10.13

Instructions for ordering complete cartridge and body assemblies. Page viii

Pressure ratings, material specifications. Page 11.02

SAE Specifications. Page 11.03

Mounting Hole Dimensions	*Port 3*	*Gauge Port*	ALUMINIUM		SG IRON	
			Model Code	*List Price*	*Model Code*	*List Price*
Inch	SAE-6	.25 NPTF	**KF6**		**KF6/S**	
Metric	.25 BSPP	.25 BSPP	**KF6/M**		**KF6/T**	

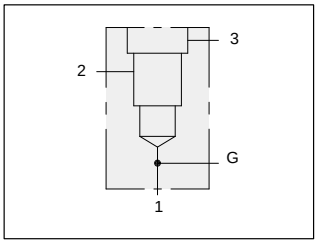

90 degree 1.50” SAE Code 61 flange port body with high capacity port 3 and gauge port.

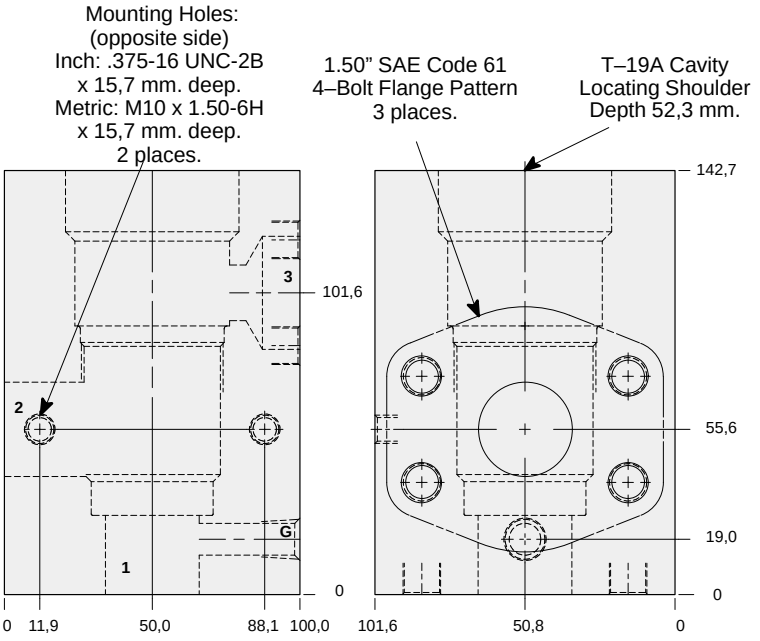

TYPICAL CARTRIDGES USED WITH THIS BODY

PPJB	- ***	Page	3.11
PPJC	- ***	Page	3.13
FRFA	- ***	Page	6.03

Instructions for ordering complete cartridge and body assemblies. Page viii

Pressure ratings, material specifications. Page 11.02

SAE Specifications. Page 11.03

Mounting Hole Dimensions	*Gauge Port*	ALUMINIUM		SG IRON	
		Model Code	*List Price*	*Model Code*	*List Price*
Inch	.25 NPTF	**KER**		**KER/S**	
Metric	.25 BSPP	**KER/M**		**KER/T**	

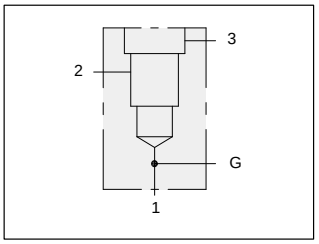

90 degree 1.50” SAE Code 62 flange port body with high capacity port 3 and gauge port.

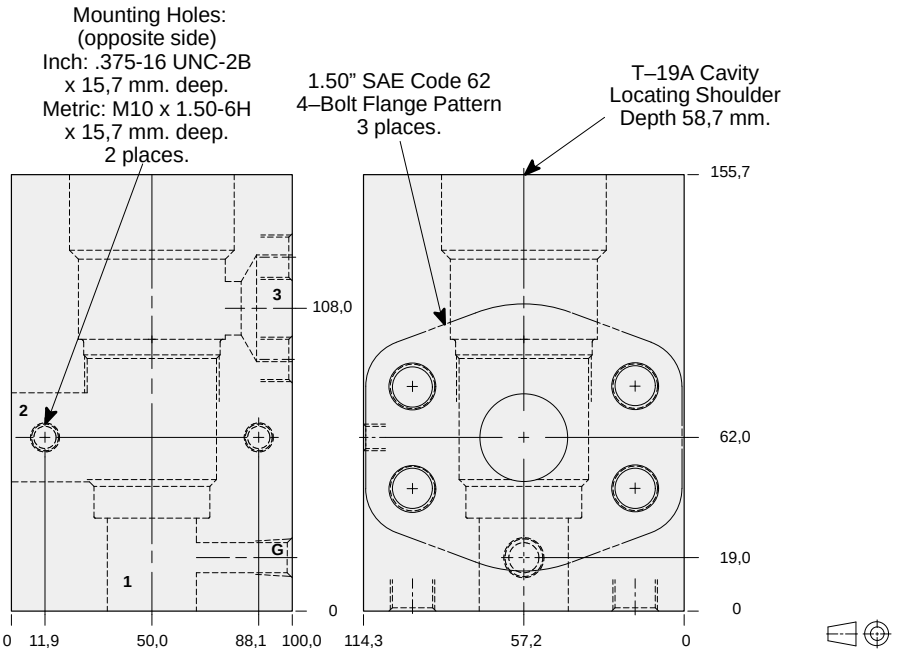

TYPICAL CARTRIDGES USED WITH THIS BODY

PPJB	- ***	Page	3.11
PPJC	- ***	Page	3.13
FRFA	- ***	Page	6.03

Instructions for ordering complete cartridge and body assemblies. Page viii

Pressure ratings, material specifications. Page 11.02

SAE Specifications. Page 11.03

Mounting Hole Dimensions	*Gauge Port*	ALUMINIUM		SG IRON	
		Model Code	*List Price*	*Model Code*	*List Price*
Inch	.25 NPTF	**KE6**		**KE6/S**	
Metric	.25 BSPP	**KE6/M**		**KE6/T**	

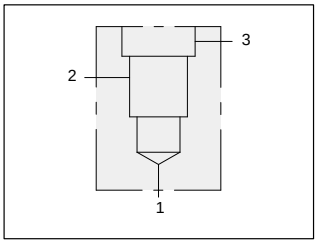

90 degree 2.00” SAE Code 61 flange port body.

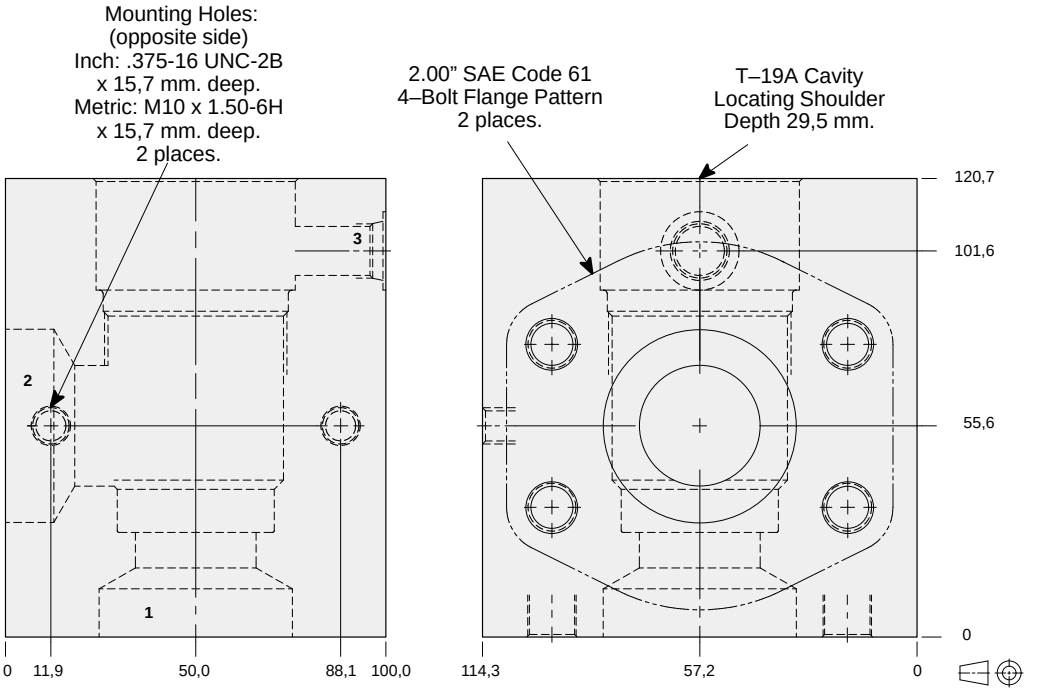

Mounting Hole Dimensions	*Port 3*	ALUMINIUM		SG IRON	
		Model Code	*List Price*	*Model Code*	*List Price*
Inch	SAE-6	**KCS**		**KCS/S**	
Metric	.25 BSPP	**KCS/M**		**KCS/T**	

TYPICAL CARTRIDGES USED WITH THIS BODY

RVIA	- ***	Page	1.19
RSJC	- ***	Page	2.07
SQJB	- ***	Page	2.09
RSJE	- ***	Page	2.11
SCIA	- ***	Page	2.13
PBJB	- ***	Page	3.07
PBJC	- ***	Page	3.09
CBIA	- ***	Page	4.11
CBIG	- ***	Page	4.13
CBIH	- ***	Page	4.15
CKIB	- ***	Page	4.17
LOJC	- ***	Page	9.09
LKJC	- ***	Page	9.11
LPJC	- ***	Page	9.13
LRJC	- ***	Page	9.15
COJA	- ***	Page	10.13

Instructions for ordering complete cartridge and body assemblies. Page viii

Pressure ratings, material specifications. Page 11.02

SAE Specifications. Page 11.03

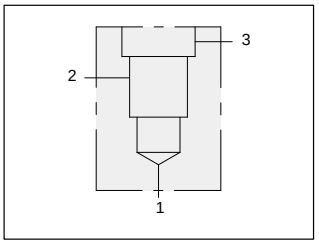

90 degree 2.00” SAE Code 62 flange port body.

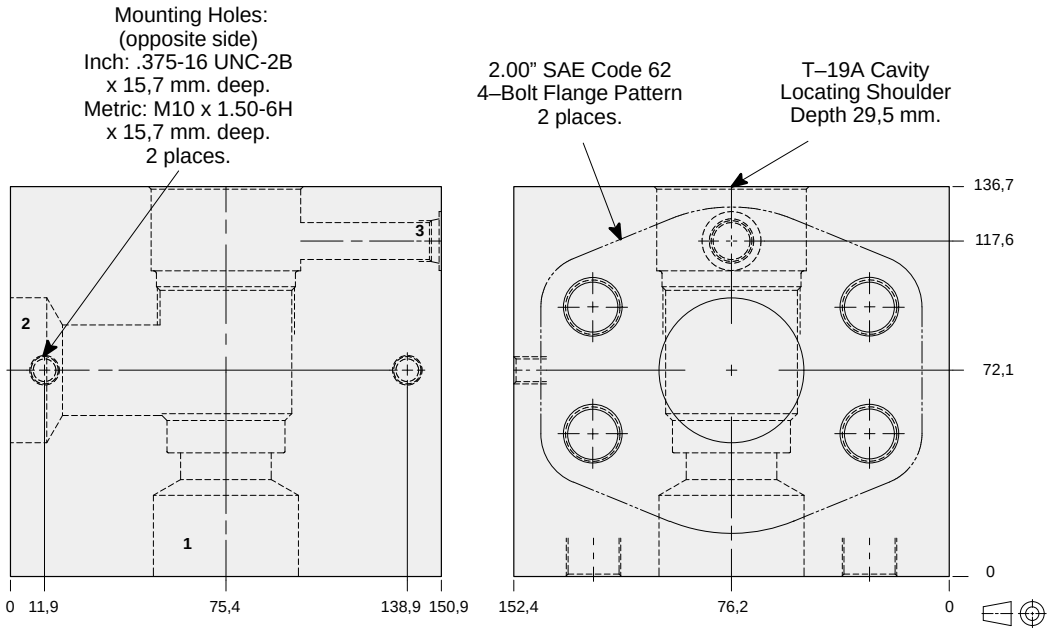

Mounting Hole Dimensions	*Port 3*	ALUMINIUM		SG IRON	
		Model Code	*List Price*	*Model Code*	*List Price*
Inch	SAE-6	**KC8**		**KC8/S**	
Metric	.25 BSPP	**KC8/M**		**KC8/T**	

TYPICAL CARTRIDGES USED WITH THIS BODY

RVIA	- ***	Page	1.19
RSJC	- ***	Page	2.07
SQJB	- ***	Page	2.09
RSJE	- ***	Page	2.11
SCIA	- ***	Page	2.13
PBJB	- ***	Page	3.07
PBJC	- ***	Page	3.09
CBIA	- ***	Page	4.11
CBIG	- ***	Page	4.13
CBIH	- ***	Page	4.15
CKIB	- ***	Page	4.17
LOJC	- ***	Page	9.09
LKJC	- ***	Page	9.11
LPJC	- ***	Page	9.13
LRJC	- ***	Page	9.15
COJA	- ***	Page	10.13

Instructions for ordering complete cartridge and body assemblies. Page viii

Pressure ratings, material specifications. Page 11.02

SAE Specifications. Page 11.03

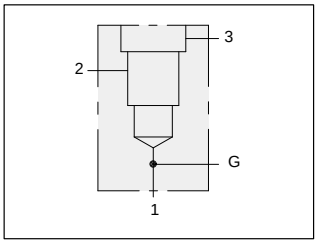

90 degree 2.00” SAE Code 61 flange port body with gauge port.

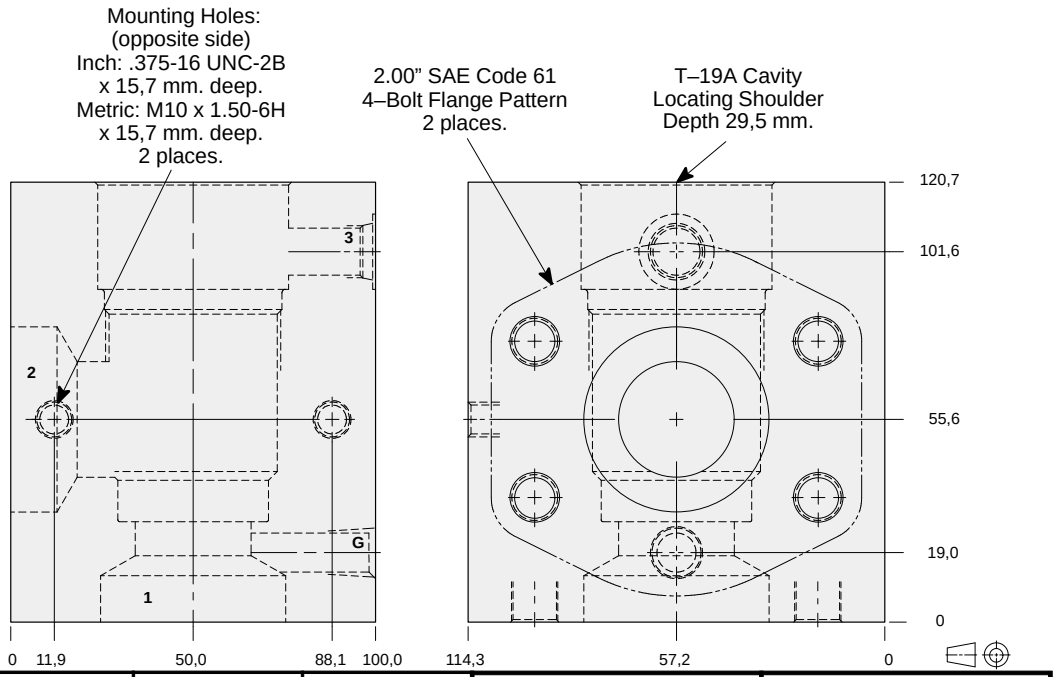

Mounting Hole Dimensions	*Port 3*	*Gauge Port*	ALUMINIUM		SG IRON	
			Model Code	*List Price*	*Model Code*	*List Price*
Inch	SAE-6	.25 NPTF	**KFS**		**KFS/S**	
Metric	.25 BSPP	.25 BSPP	**KFS/M**		**KFS/T**	

TYPICAL CARTRIDGES USED WITH THIS BODY

RVIA	- ***	Page	1.19
RSJC	- ***	Page	2.07
SQJB	- ***	Page	2.09
RSJE	- ***	Page	2.11
SCIA	- ***	Page	2.13
PBJB	- ***	Page	3.07
PBJC	- ***	Page	3.09
CBIA	- ***	Page	4.11
CBIG	- ***	Page	4.13
CBIH	- ***	Page	4.15
CKIB	- ***	Page	4.17
LOJC	- ***	Page	9.09
LKJC	- ***	Page	9.11
LPJC	- ***	Page	9.13
LRJC	- ***	Page	9.15
COJA	- ***	Page	10.13

Instructions for ordering complete cartridge and body assemblies. Page viii

Pressure ratings, material specifications. Page 11.02

SAE Specifications. Page 11.03

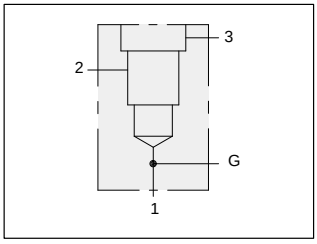

90 degree 2.00” SAE Code 62 flange port body with gauge port.

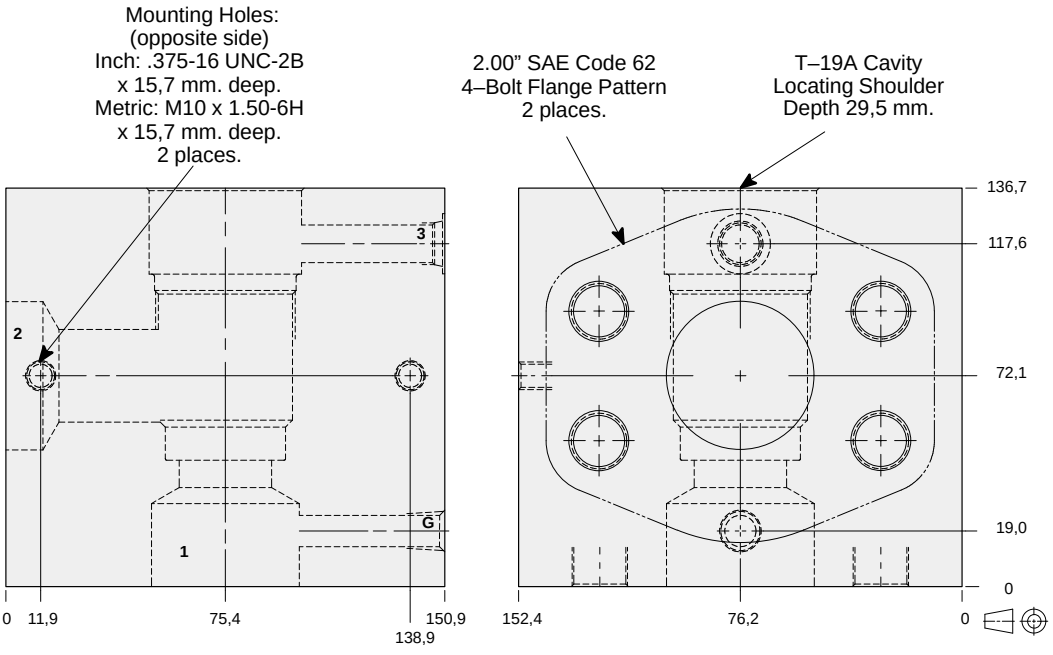

Mounting Hole Dimensions	*Port 3*	*Gauge Port*	ALUMINIUM		SG IRON	
			Model Code	*List Price*	*Model Code*	*List Price*
Inch	SAE-6	.25 NPTF	**KF8**		**KF8/S**	
Metric	.25 BSPP	.25 BSPP	**KF8/M**		**KF8/T**	

TYPICAL CARTRIDGES USED WITH THIS BODY

RVIA	- ***	Page	1.19
RSJC	- ***	Page	2.07
SQJB	- ***	Page	2.09
RSJE	- ***	Page	2.11
SCIA	- ***	Page	2.13
PBJB	- ***	Page	3.07
PBJC	- ***	Page	3.09
CBIA	- ***	Page	4.11
CBIG	- ***	Page	4.13
CBIH	- ***	Page	4.15
CKIB	- ***	Page	4.17
LOJC	- ***	Page	9.09
LKJC	- ***	Page	9.11
LPJC	- ***	Page	9.13
LRJC	- ***	Page	9.15
COJA	- ***	Page	10.13

Instructions for ordering complete cartridge and body assemblies. Page viii

Pressure ratings, material specifications. Page 11.02

SAE Specifications. Page 11.03

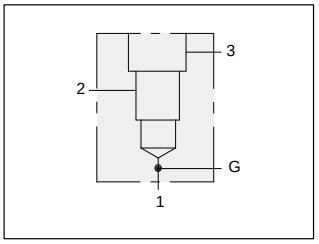

TYPICAL CARTRIDGES USED WITH THIS BODY

PPJB	- ***	Page	3.11
PPJC	- ***	Page	3.13
FRFA	- ***	Page	6.03

Instructions for ordering complete cartridge and body assemblies.	Page	viii
Pressure ratings, material specifications.	Page	11.02
SAE Specifications.	Page	11.03

90 degree 2.00” SAE Code 61 flange port body with high capacity port 3 and gauge port.

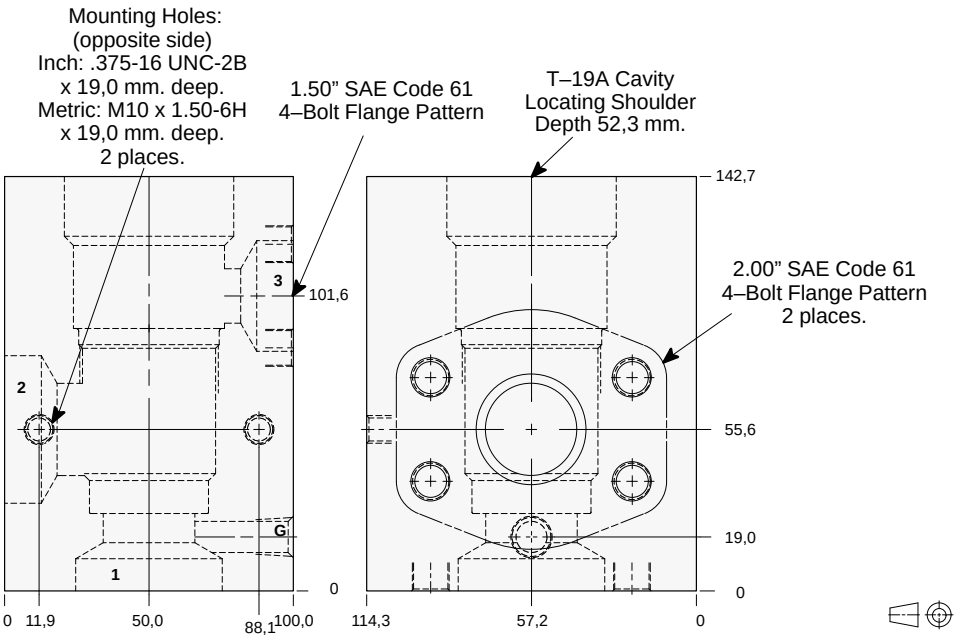

Mounting Hole Dimensions	*Port 3 SAE Code 61*	*Gauge Port*	ALUMINIUM		SG IRON	
			Model Code	*List Price*	*Model Code*	*List Price*
Inch	1.50”	.25 NPTF	**KES**		**KES/S**	
Metric	1.50”	.25 BSPP	**KES/M**		**KES/T**	

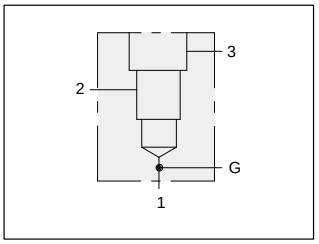

TYPICAL CARTRIDGES USED WITH THIS BODY

PPJB	- ***	Page	3.11
PPJC	- ***	Page	3.13
FRFA	- ***	Page	6.03

Instructions for ordering complete cartridge and body assemblies.	Page	viii
Pressure ratings, material specifications.	Page	11.02
SAE Specifications.	Page	11.03

90 degree 2.00” SAE Code 62 flange port body with high capacity port 3 and gauge port.

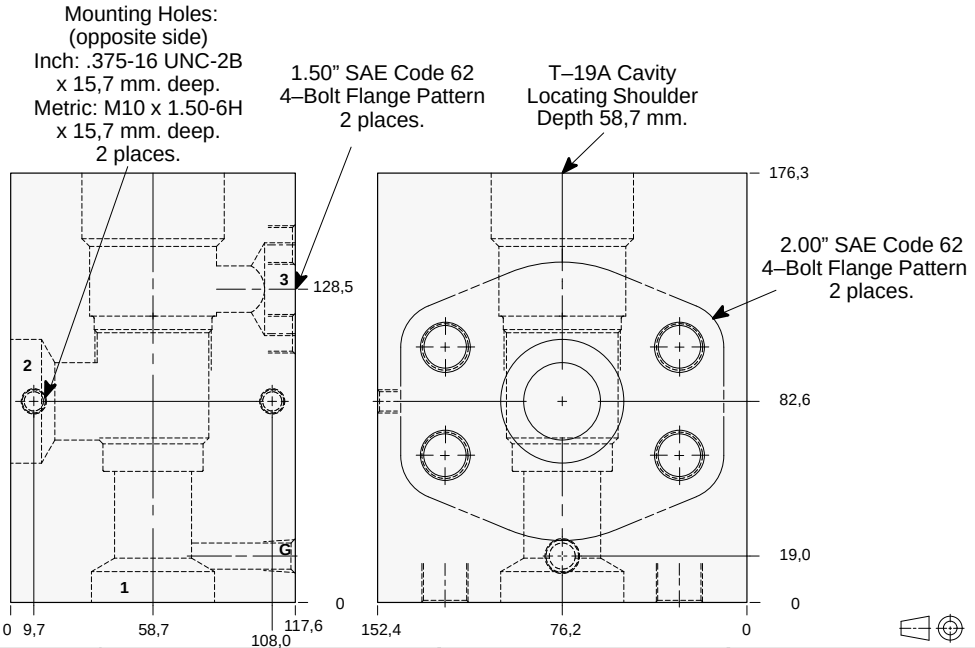

Mounting Hole Dimensions	*Port 3 SAE Code 62*	*Gauge Port*	ALUMINIUM		SG IRON	
			Model Code	*List Price*	*Model Code*	*List Price*
Inch	1.50”	.25 NPTF	**KE8**		**KE8/S**	
Metric	1.50”	.25 BSPP	**KE8/M**		**KE8/T**	

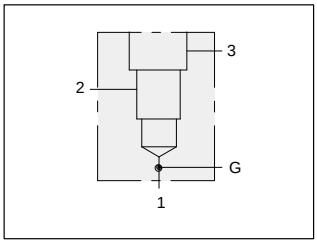

TYPICAL CARTRIDGES USED WITH THIS BODY

RVIA	- ***	Page	1.19
RSJC	- ***	Page	2.07
SQJB	- ***	Page	2.09
RSJE	- ***	Page	2.11
SCIA	- ***	Page	2.13
PBJB	- ***	Page	3.07
PBJC	- ***	Page	3.09

Instructions for ordering complete cartridge and body assemblies. Page viii

Pressure ratings, material specifications. Page 11.02

SAE Specifications. Page 11.03

Through port 1.00” SAE Code 61 flange port body with gauge port.

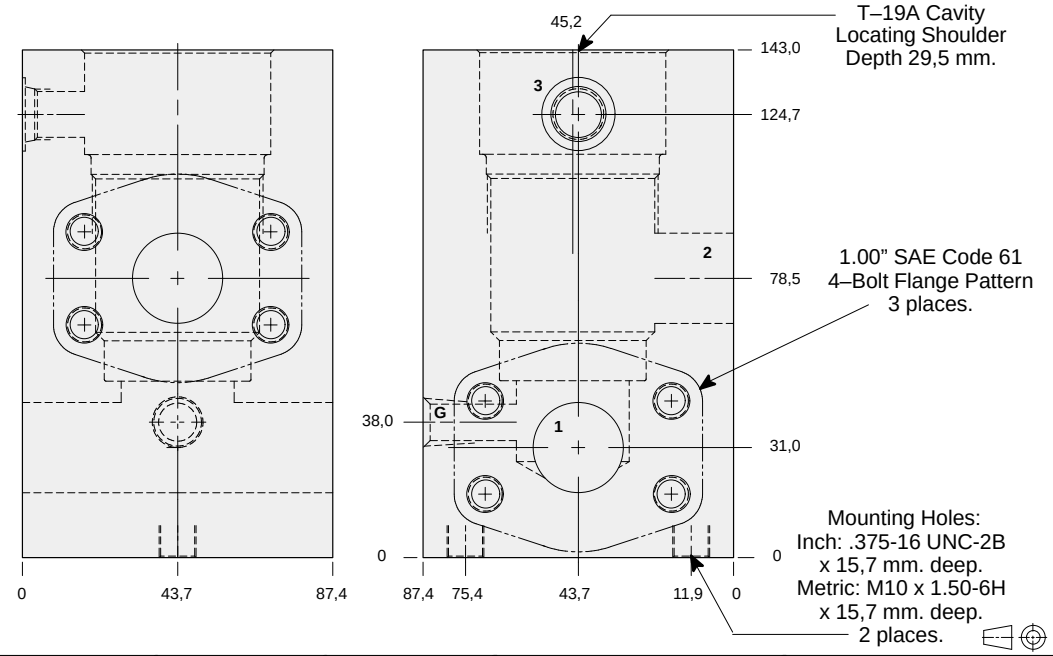

Mounting Hole Dimensions	*Port 3*	*Gauge Port*	ALUMINIUM		SG IRON	
			Model Code	*List Price*	*Model Code*	*List Price*
Inch	SAE-6	.25 NPTF	**KHP**		**KHP/S**	
Metric	.25 BSPP	.25 BSPP	**KHP/M**		**KHP/T**	

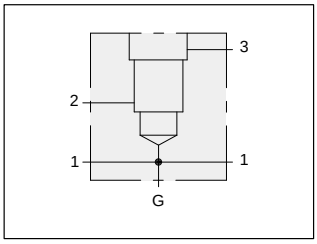

TYPICAL CARTRIDGES USED WITH THIS BODY

RVIA	- ***	Page	1.19
RSJC	- ***	Page	2.07
SQJB	- ***	Page	2.09
RSJE	- ***	Page	2.11
SCIA	- ***	Page	2.13
PBJB	- ***	Page	3.07
PBJC	- ***	Page	3.09

Instructions for ordering complete cartridge and body assemblies. Page viii

Pressure ratings, material specifications. Page 11.02

SAE Specifications. Page 11.03

Through port 1.00” SAE Code 62 flange port body with gauge port.

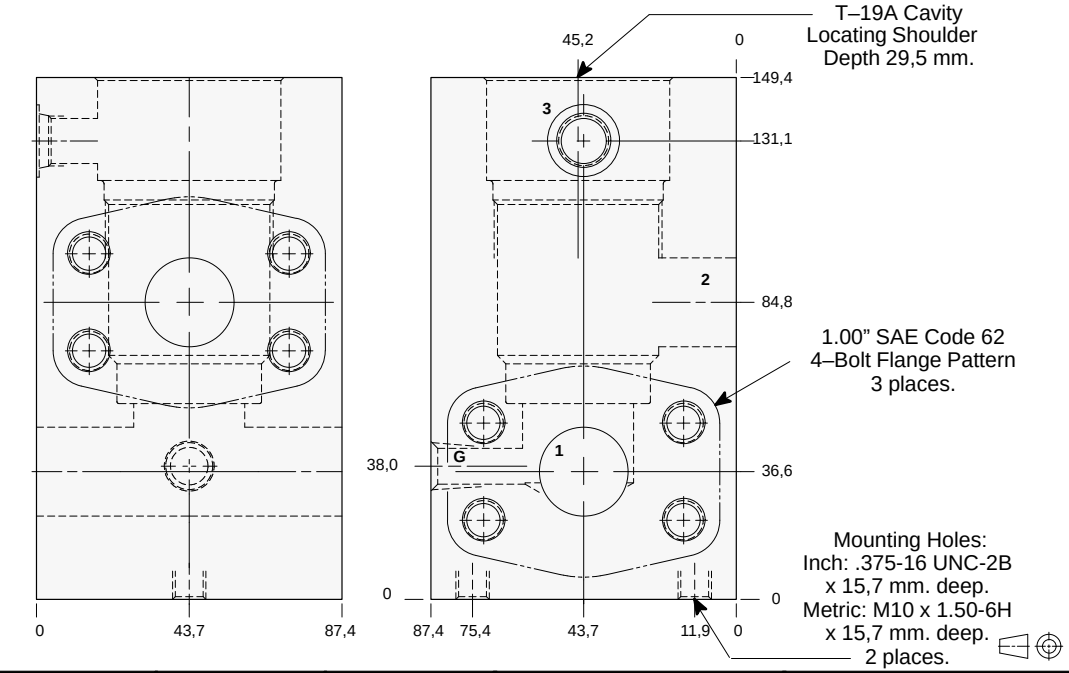

Mounting Hole Dimensions	*Port 3*	*Gauge Port*	ALUMINIUM		SG IRON	
			Model Code	*List Price*	*Model Code*	*List Price*
Inch	SAE-6	.25 NPTF	**KH4**		**KH4/S**	
Metric	.25 BSPP	.25 BSPP	**KH4/M**		**KH4/T**	

LINE MOUNT BODIES

- Aluminium rated to 210 bar and SG Iron rated to 350 bar.

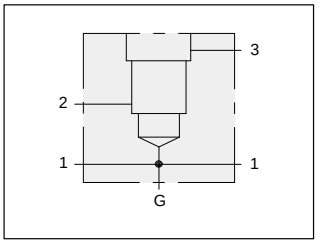

TYPICAL CARTRIDGES USED WITH THIS BODY

RVIA	- ***	Page	1.19
RSJC	- ***	Page	2.07
SQJB	- ***	Page	2.09
RSJE	- ***	Page	2.11
SCIA	- ***	Page	2.13
PBJB	- ***	Page	3.07
PBJC	- ***	Page	3.09

Instructions for ordering complete cartridge and body assemblies. Page viii

Pressure ratings, material specifications. Page 11.02

SAE Specifications. Page 11.03

Through port 1.25” SAE Code 61 flange port body with gauge port.

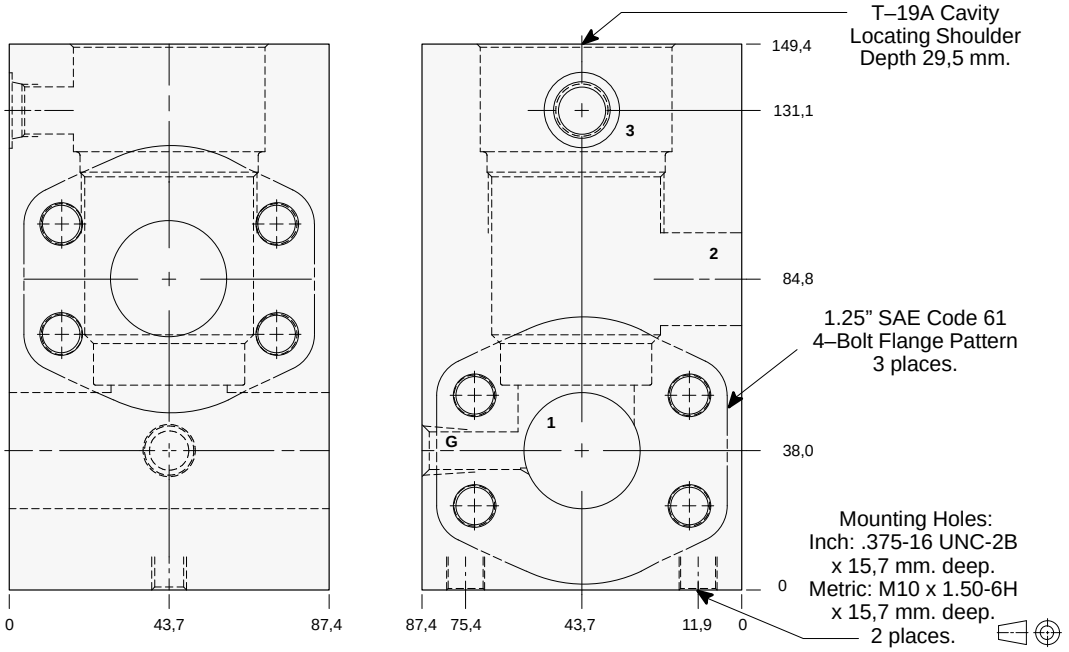

Mounting Hole Dimensions	*Port 3*	*Gauge Port*	ALUMINIUM		SG IRON	
			Model Code	*List Price*	*Model Code*	*List Price*
Inch	SAE-6	.25 NPTF	**KHQ**		**KHQ/S**	
Metric	.25 BSPP	.25 BSPP	**KHQ/M**		**KHQ/T**	

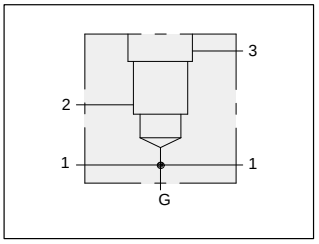

TYPICAL CARTRIDGES USED WITH THIS BODY

RVIA	- ***	Page	1.19
RSJC	- ***	Page	2.07
SQJB	- ***	Page	2.09
RSJE	- ***	Page	2.11
SCIA	- ***	Page	2.13
PBJB	- ***	Page	3.07
PBJC	- ***	Page	3.09

Instructions for ordering complete cartridge and body assemblies. Page viii

Pressure ratings, material specifications. Page 11.02

SAE Specifications. Page 11.03

Through port 1.25” SAE Code 62 flange port body with gauge port.

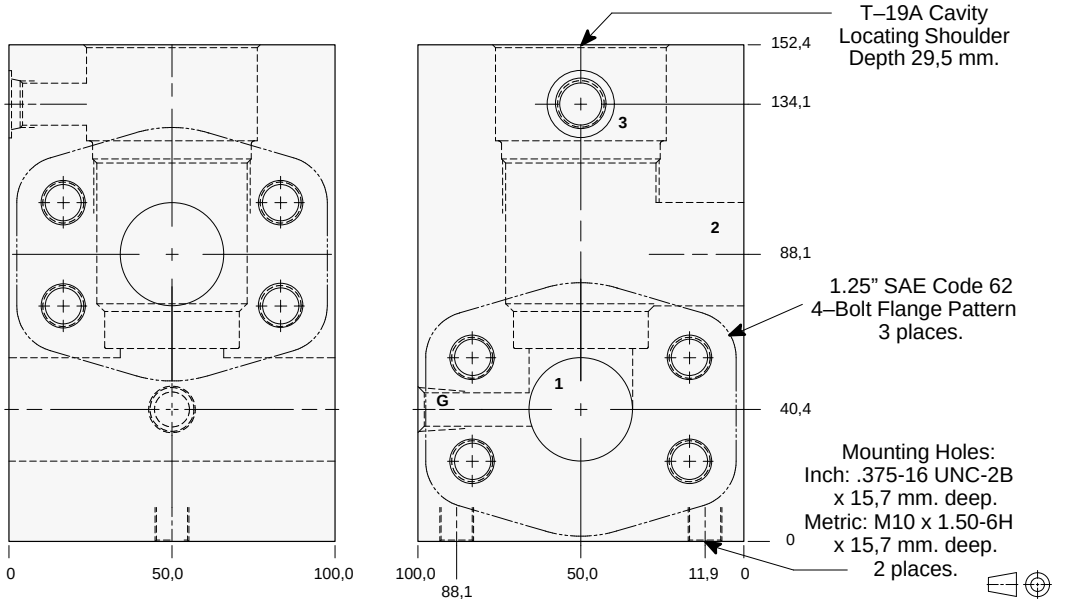

Mounting Hole Dimensions	*Port 3*	*Gauge Port*	ALUMINIUM		SG IRON	
			Model Code	*List Price*	*Model Code*	*List Price*
Inch	SAE-6	.25 NPTF	**KH5**		**KH5/S**	
Metric	.25 BSPP	.25 BSPP	**KH5/M**		**KH5/T**	

LINE MOUNT BODIES

- Aluminium rated to 210 bar and SG Iron rated to 350 bar.

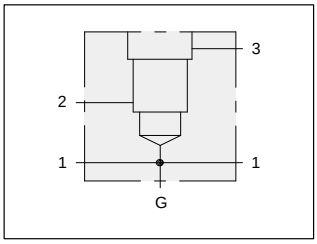

TYPICAL CARTRIDGES USED WITH THIS BODY

RVIA	- ***	Page	1.19
RSJC	- ***	Page	2.07
SQJB	- ***	Page	2.09
RSJE	- ***	Page	2.11
SCIA	- ***	Page	2.13
PBJB	- ***	Page	3.07
PBJC	- ***	Page	3.09

Instructions for ordering complete cartridge and body assemblies. Page viii

Pressure ratings, material specifications. Page 11.02

SAE Specifications. Page 11.03

Through port 1.50” SAE Code 61 flange port body with gauge port.

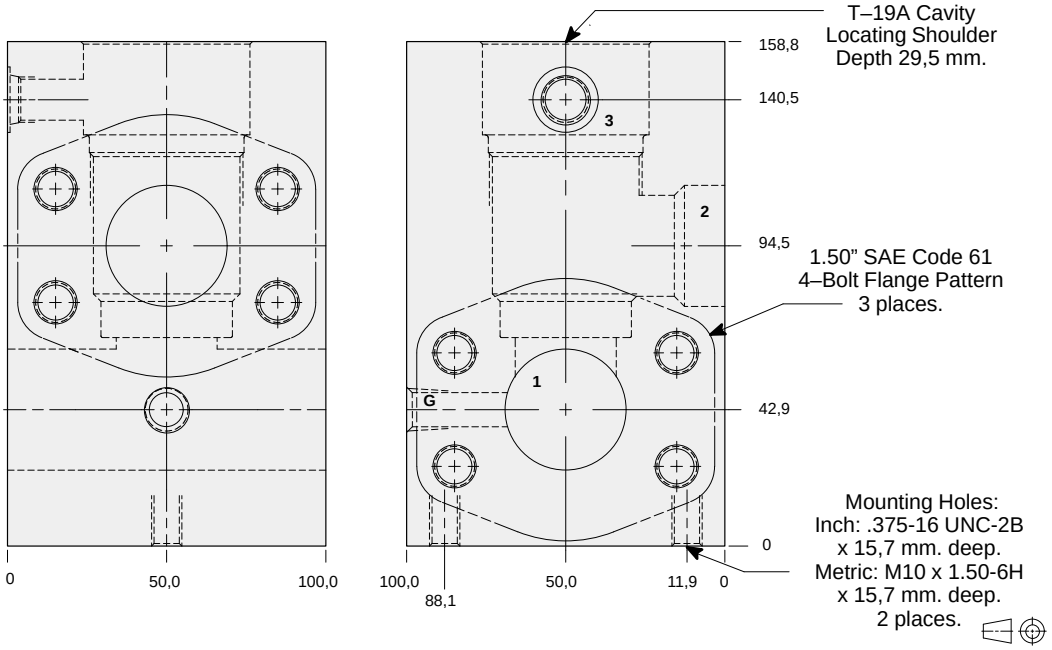

Mounting Hole Dimensions	*Port 3*	*Gauge Port*	ALUMINIUM		SG IRON	
			Model Code	*List Price*	*Model Code*	*List Price*
Inch	SAE-6	.25 NPTF	**KHR**		**KHR/S**	
Metric	.25 BSPP	.25 BSPP	**KHR/M**		**KHR/T**	

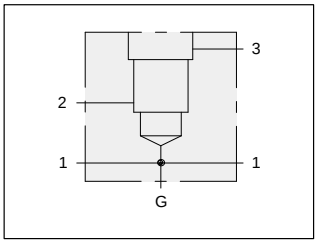

TYPICAL CARTRIDGES USED WITH THIS BODY

RVIA	- ***	Page	1.19
RSJC	- ***	Page	2.07
SQJB	- ***	Page	2.09
RSJE	- ***	Page	2.11
SCIA	- ***	Page	2.13
PBJB	- ***	Page	3.07
PBJC	- ***	Page	3.09

Instructions for ordering complete cartridge and body assemblies. Page viii

Pressure ratings, material specifications. Page 11.02

SAE Specifications. Page 11.03

Through port 1.50” SAE Code 62 flange port body with gauge port.

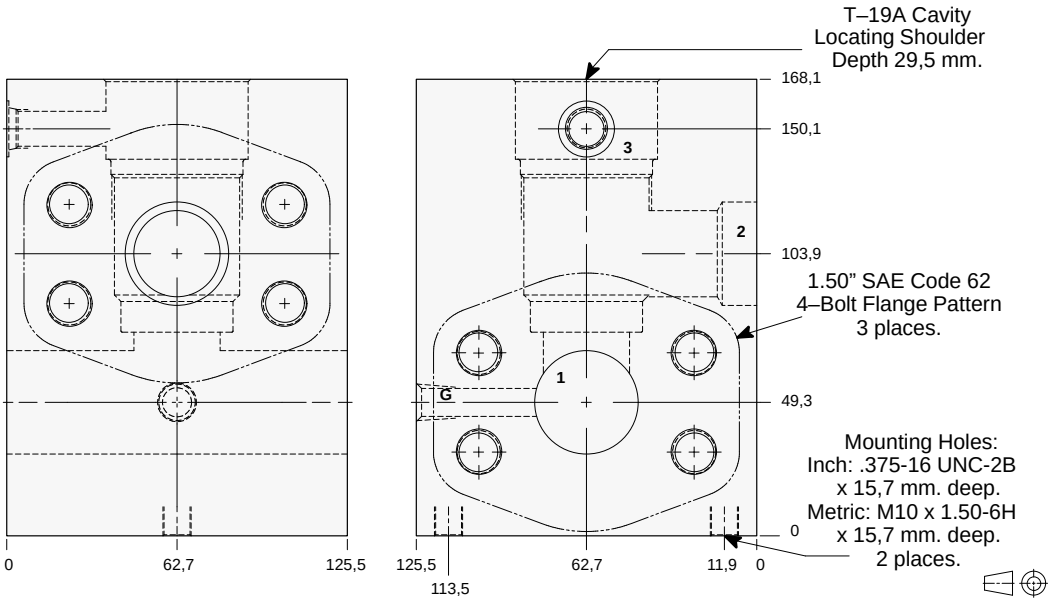

Mounting Hole Dimensions	*Port 3*	*Gauge Port*	ALUMINIUM		SG IRON	
			Model Code	*List Price*	*Model Code*	*List Price*
Inch	SAE-6	.25 NPTF	**KH6**		**KH6/S**	
Metric	.25 BSPP	.25 BSPP	**KH6/M**		**KH6/T**	

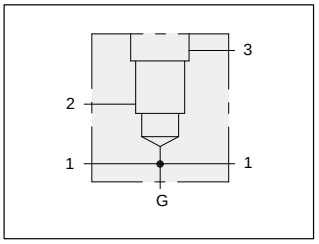

Through port 2.00” SAE Code 61 flange port body with gauge port.

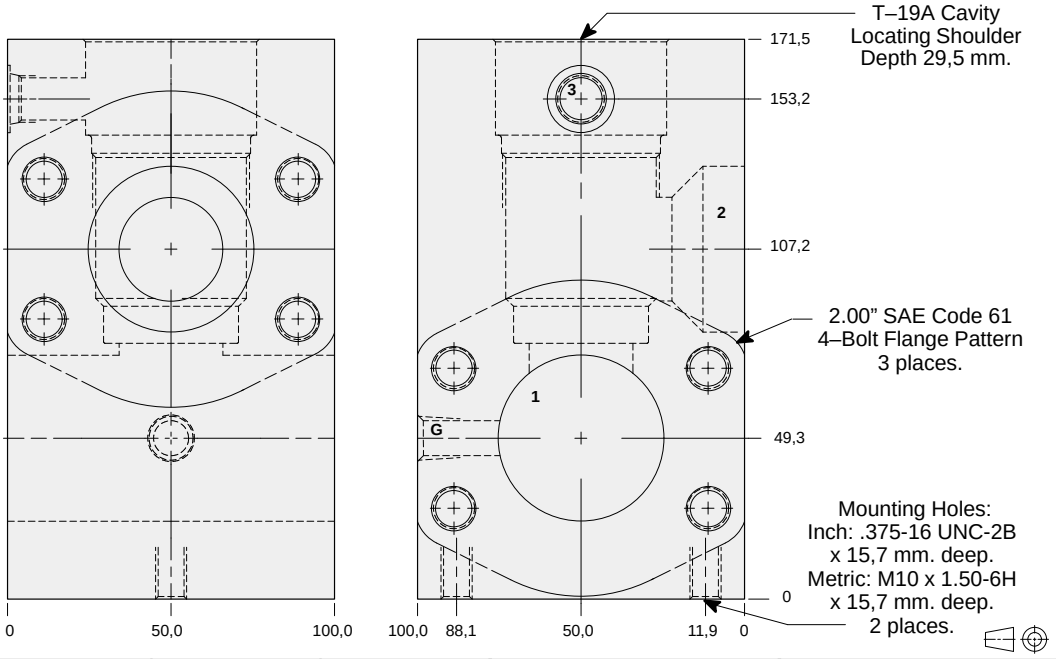

TYPICAL CARTRIDGES USED WITH THIS BODY

RVIA	- ***	Page	1.19
RSJC	- ***	Page	2.07
SQJB	- ***	Page	2.09
RSJE	- ***	Page	2.11
SCIA	- ***	Page	2.13
PBJB	- ***	Page	3.07
PBJC	- ***	Page	3.09

Instructions for ordering complete cartridge and body assemblies. Page viii

Pressure ratings, material specifications. Page 11.02

SAE Specifications. Page 11.03

Mounting Hole Dimensions	*Port 3*	*Gauge Port*	ALUMINIUM		SG IRON	
			Model Code	*List Price*	*Model Code*	*List Price*
Inch	SAE-6	.25 NPTF	**KHS**		**KHS/S**	
Metric	.25 BSPP	.25 BSPP	**KHS/M**		**KHS/T**	

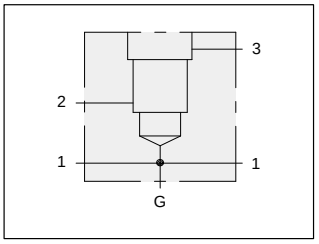

Through port 2.00” SAE Code 62 flange port body with gauge port.

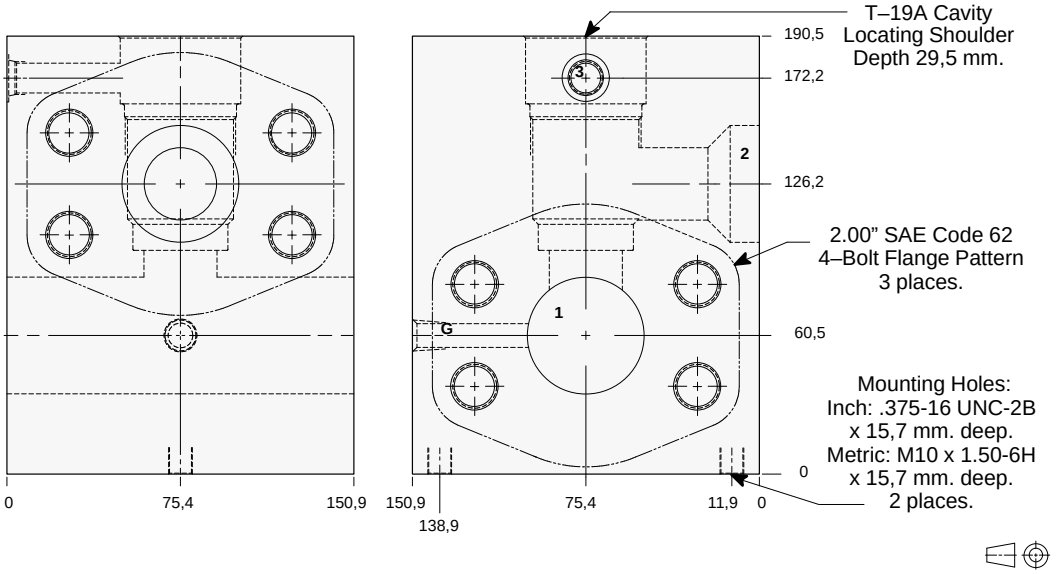

TYPICAL CARTRIDGES USED WITH THIS BODY

RVIA	- ***	Page	1.19
RSJC	- ***	Page	2.07
SQJB	- ***	Page	2.09
RSJE	- ***	Page	2.11
SCIA	- ***	Page	2.13
PBJB	- ***	Page	3.07
PBJC	- ***	Page	3.09

Instructions for ordering complete cartridge and body assemblies. Page viii

Pressure ratings, material specifications. Page 11.02

SAE Specifications. Page 11.03

Mounting Hole Dimensions	*Port 3*	*Gauge Port*	ALUMINIUM		SG IRON	
			Model Code	*List Price*	*Model Code*	*List Price*
Inch	SAE-6	.25 NPTF	**KH8**		**KH8/S**	
Metric	.25 BSPP	.25 BSPP	**KH8/M**		**KH8/T**	

LINE MOUNT BODIES

- Aluminium rated to 210 bar and SG Iron rated to 350 bar.

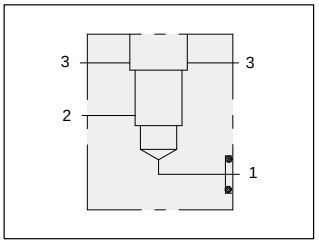

TYPICAL CARTRIDGES USED WITH THIS BODY

RVIA	- ***	Page	1.19
RSJC	- ***	Page	2.07
SQJB	- ***	Page	2.09
RSJE	- ***	Page	2.11
SCIA	- ***	Page	2.13
CBIA	- ***	Page	4.11
CBIG	- ***	Page	4.13
CBIH	- ***	Page	4.15
CKIB	- ***	Page	4.17
LOJC	- ***	Page	9.09
LKJC	- ***	Page	9.11
LPJC	- ***	Page	9.13
LRJC	- ***	Page	9.15
COJA	- ***	Page	10.13

Cartridge seal type determines O–ring type.

Instructions for ordering complete cartridge and body assemblies. Page viii

Pressure ratings, material specifications. Page 11.02

SAE Specifications. Page 11.03

Direct mount 1.25” SAE Code 61 body.

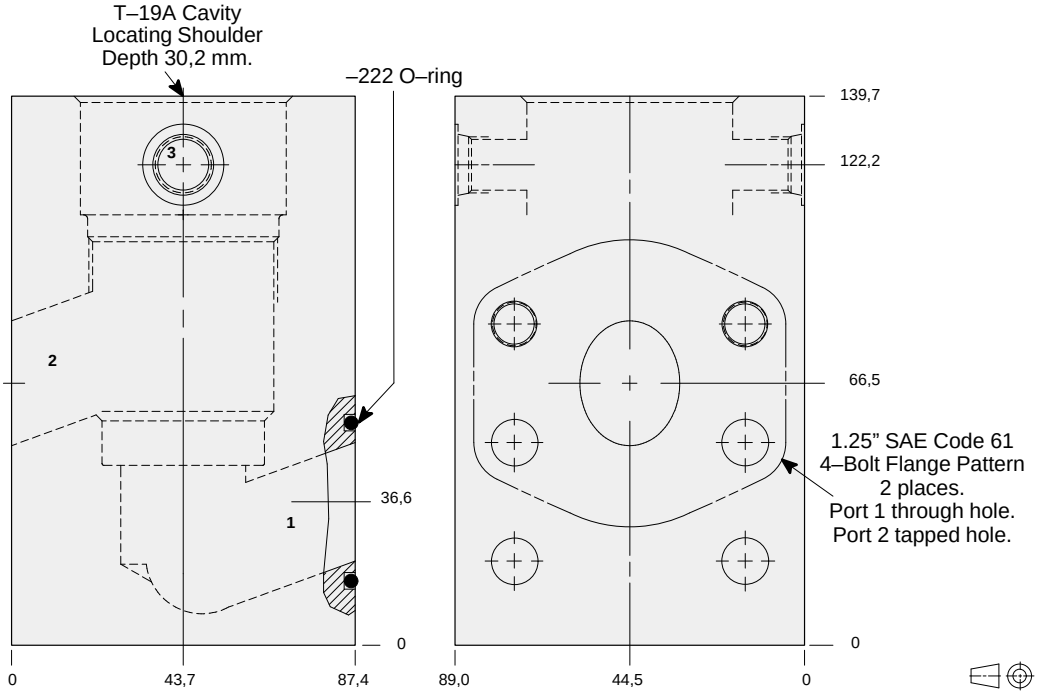

Mounting Hole Dimensions	*Port 3*	ALUMINIUM		SG IRON	
		Model Code	*List Price*	*Model Code*	*List Price*
Inch	SAE-6	**ZNX**		**ZNX/S**	
Metric	.25 BSPP	**ZNX/M**		**ZNX/T**	

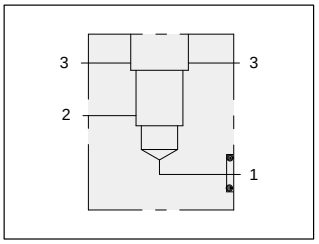

TYPICAL CARTRIDGES USED WITH THIS BODY

RVIA	- ***	Page	1.19
RSJC	- ***	Page	2.07
SQJB	- ***	Page	2.09
RSJE	- ***	Page	2.11
SCIA	- ***	Page	2.13
CBIA	- ***	Page	4.11
CBIG	- ***	Page	4.13
CBIH	- ***	Page	4.15
CKIB	- ***	Page	4.17
LOJC	- ***	Page	9.09
LKJC	- ***	Page	9.11
LPJC	- ***	Page	9.13
LRJC	- ***	Page	9.15
COJA	- ***	Page	10.13

Cartridge seal type determines O–ring type.

Instructions for ordering complete cartridge and body assemblies. Page viii

Pressure ratings, material specifications. Page 11.02

SAE Specifications. Page 11.03

Direct mount 1.25” SAE Code 62 body

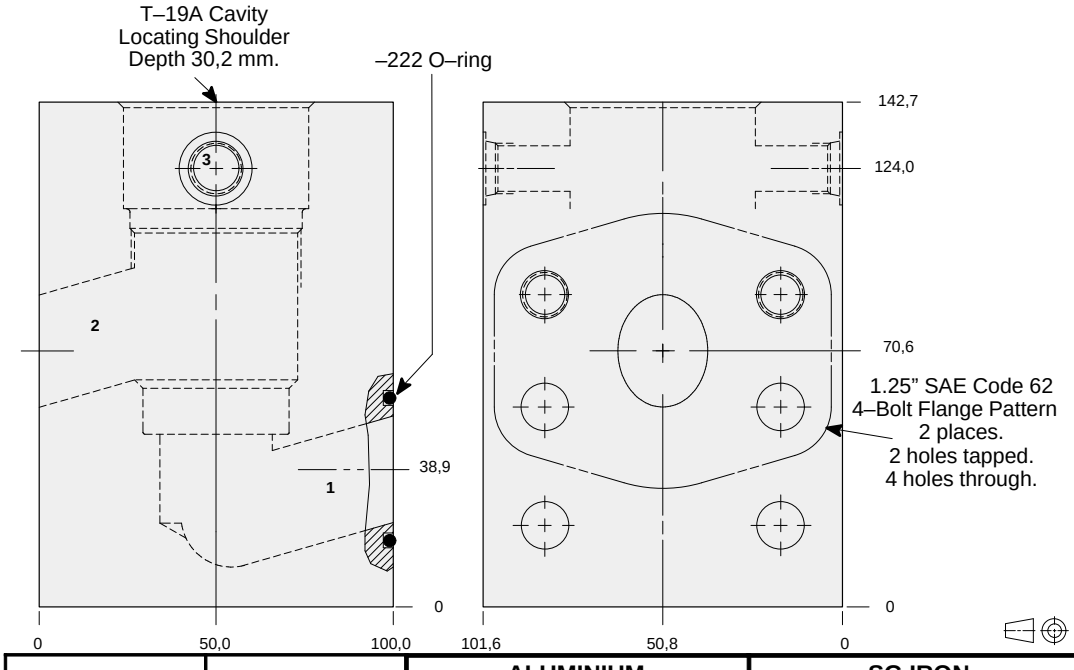

Mounting Hole Dimensions	*Port 3*	ALUMINIUM		SG IRON	
		Model Code	*List Price*	*Model Code*	*List Price*
Inch	SAE-6	**ZFD**		**ZFD/S**	
Metric	.25 BSPP	**ZFD/M**		**ZFD/T**	

Series 4 T-19A

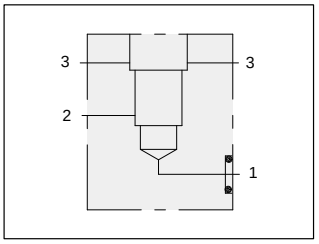

Direct mount 1.50” SAE Code 61 body.

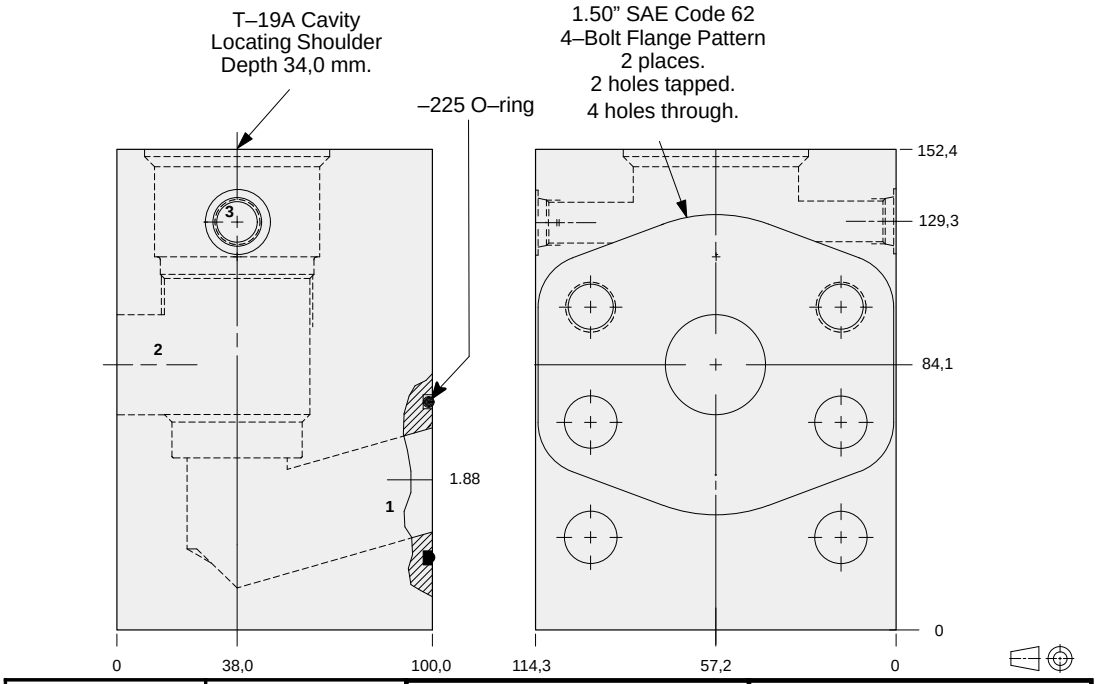

Mounting Hole Dimensions	*Port 3*	ALUMINIUM		SG IRON	
		Model Code	*List Price*	*Model Code*	*List Price*
Inch	SAE-6	**ZNY**		**ZNY/S**	
Metric	.25 BSPP	**ZNY/M**		**ZNY/T**	

TYPICAL CARTRIDGES USED WITH THIS BODY

RVIA	- ***	Page	1.19
RSJC	- ***	Page	2.07
SQJB	- ***	Page	2.09
RSJE	- ***	Page	2.11
SCIA	- ***	Page	2.13
CBIA	- ***	Page	4.11
CBIG	- ***	Page	4.13
CBIH	- ***	Page	4.15
CKIB	- ***	Page	4.17
LOJC	- ***	Page	9.09
LKJC	- ***	Page	9.11
LPJC	- ***	Page	9.13
LRJC	- ***	Page	9.15
COJA	- ***	Page	10.13

Cartridge seal type determines O–ring type.

Instructions for ordering complete cartridge and body assemblies. Page viii

Pressure ratings, material specifications. Page 11.02

SAE Specifications. Page 11.03

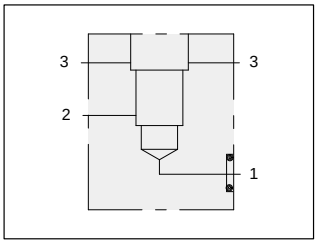

Direct mount 1.50” SAE Code 62 body

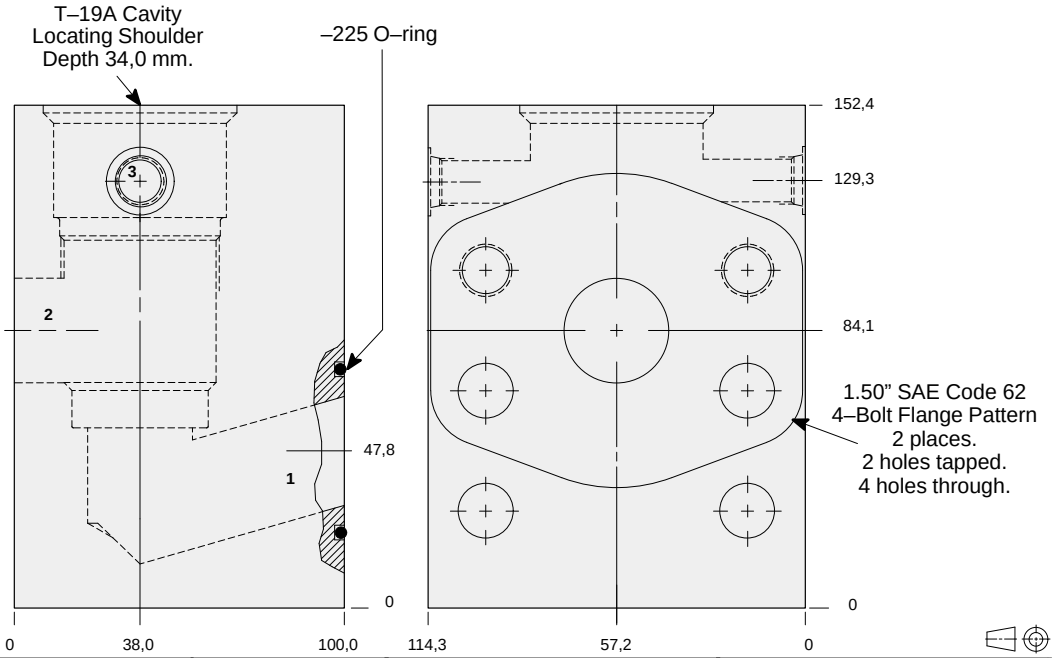

Mounting Hole Dimensions	*Port 3*	ALUMINIUM		SG IRON	
		Model Code	*List Price*	*Model Code*	*List Price*
Inch	SAE-6	**ZDQ**		**ZDQ/S**	
Metric	.25 BSPP	**ZDQ/M**		**ZDQ/T**	

TYPICAL CARTRIDGES USED WITH THIS BODY

RVIA	- ***	Page	1.19
RSJC	- ***	Page	2.07
SQJB	- ***	Page	2.09
RSJE	- ***	Page	2.11
SCIA	- ***	Page	2.13
CBIA	- ***	Page	4.11
CBIG	- ***	Page	4.13
CBIH	- ***	Page	4.15
CKIB	- ***	Page	4.17
LOJC	- ***	Page	9.09
LKJC	- ***	Page	9.11
LPJC	- ***	Page	9.13
LRJC	- ***	Page	9.15
COJA	- ***	Page	10.13

Cartridge seal type determines O–ring type.

Instructions for ordering complete cartridge and body assemblies. Page viii

Pressure ratings, material specifications. Page 11.02

SAE Specifications. Page 11.03

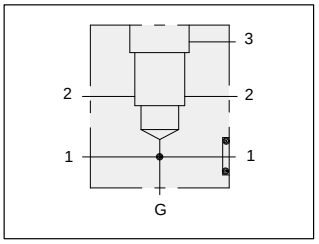

Sandwich mount through port 1.50” SAE Code 61 body with gauge port.

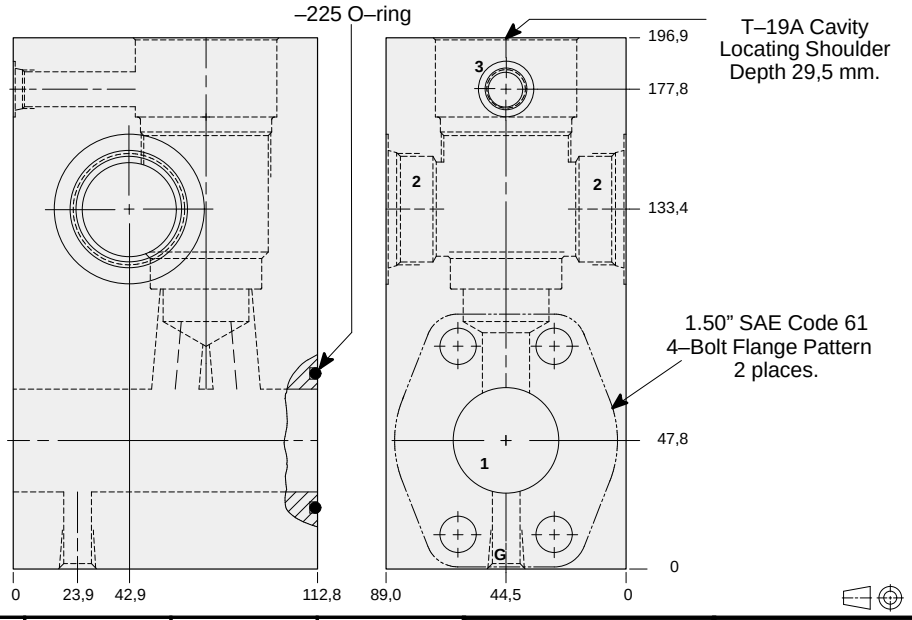

TYPICAL CARTRIDGES USED WITH THIS BODY

RVIA	- ***	Page	1.19
RSJC	- ***	Page	2.07
SQJB	- ***	Page	2.09
RSJE	- ***	Page	2.11
SCIA	- ***	Page	2.13

Cartridge seal type determines O–ring type.

Instructions for ordering complete cartridge and body assemblies. Page viii

Pressure ratings, material specifications. Page 11.02

SAE Specifications. Page 11.03

Mounting Hole Dimensions	*Port 2*	*Port 3*	*Gauge Port*	ALUMINIUM		SG IRON	
				Model Code	*List Price*	*Model Code*	*List Price*
Inch	1.25 NPTF	.25 NPTF	.25 NPTF	**ZMW**		**ZMW/S**	
Inch	SAE-20	SAE-6	.25 NPTF	**ZMX**		**ZMX/S**	
Metric	1.25 BSPP	.25 BSPP	.25 BSPP	**ZMY/M**		**ZMY/T**	

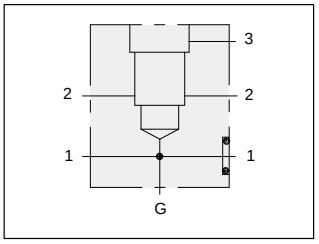

Sandwich mount through port 1.50” SAE Code 62 body with gauge port.

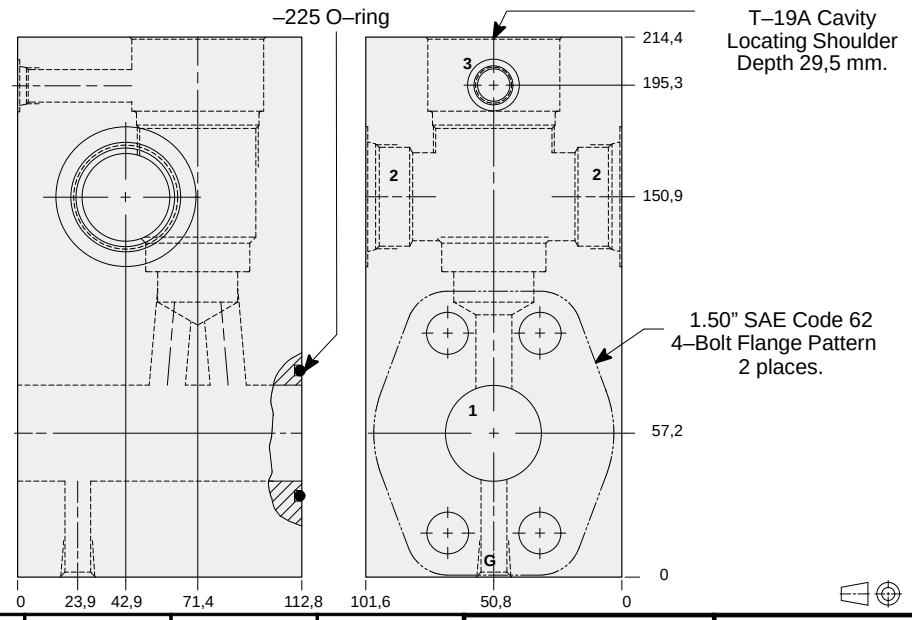

TYPICAL CARTRIDGES USED WITH THIS BODY

RVIA	- ***	Page	1.19
RSJC	- ***	Page	2.07
SQJB	- ***	Page	2.09
RSJE	- ***	Page	2.11
SCIA	- ***	Page	2.13

Cartridge seal type determines O–ring type.

Instructions for ordering complete cartridge and body assemblies. Page viii

Pressure ratings, material specifications. Page 11.02

SAE Specifications. Page 11.03

Mounting Hole Dimensions	*Port 2*	*Port 3*	*Gauge Port*	ALUMINIUM		SG IRON	
				Model Code	*List Price*	*Model Code*	*List Price*
Inch	1.25 NPTF	.25 NPTF	.25 NPTF	**WXT**		**WXT/S**	
Inch	SAE-20	SAE-6	.25 NPTF	**WXS**		**WXS/S**	
Metric	1.25 BSPP	.25 BSPP	.25 BSPP	**WXR/M**		**WXR/T**	

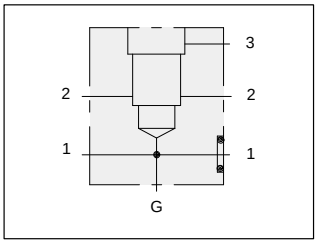

Sandwich mount through flange port 1.50” SAE Code 61 body with gauge port.

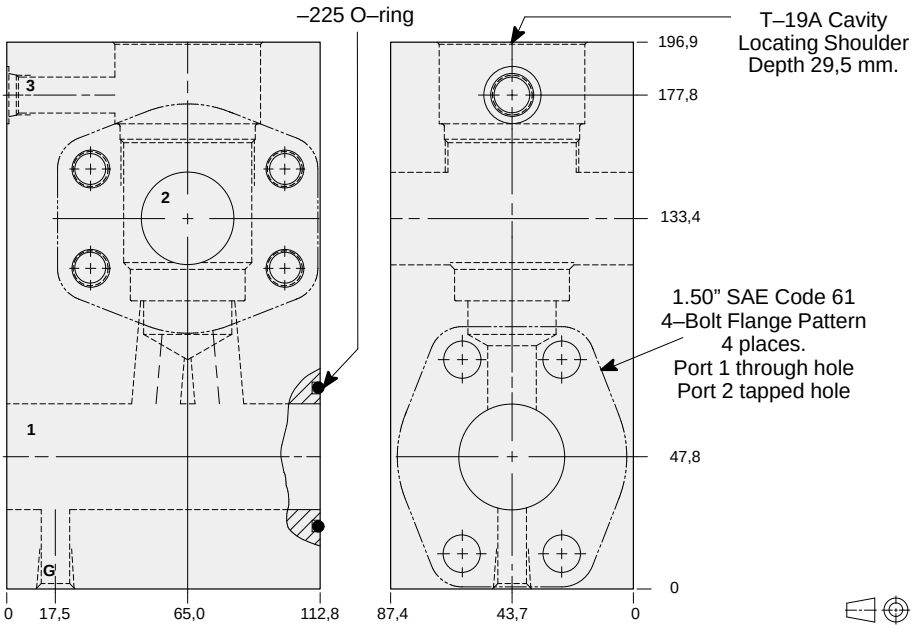

TYPICAL CARTRIDGES USED WITH THIS BODY

RVIA	- ***	Page	1.19
RSJC	- ***	Page	2.07
SQJB	- ***	Page	2.09
RSJE	- ***	Page	2.11
SCIA	- ***	Page	2.13

Cartridge seal type determines O–ring type.

Instructions for ordering complete cartridge and body assemblies. Page viii

Pressure ratings, material specifications. Page 11.02

SAE Specifications. Page 11.03

Mounting Hole Dimensions	*Port 3*	*Gauge Port*	ALUMINIUM		SG IRON	
			Model Code	*List Price*	*Model Code*	*List Price*
Inch	SAE-6	.25 NPTF	**ZMZ**		**ZMZ/S**	
Metric	.25 BSPP	.25 BSPP	**ZMZ/M**		**ZMZ/T**	

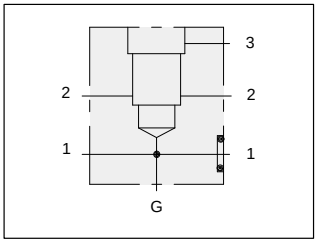

Sandwich mount through flange port 1.50” SAE Code 62 body with gauge port.

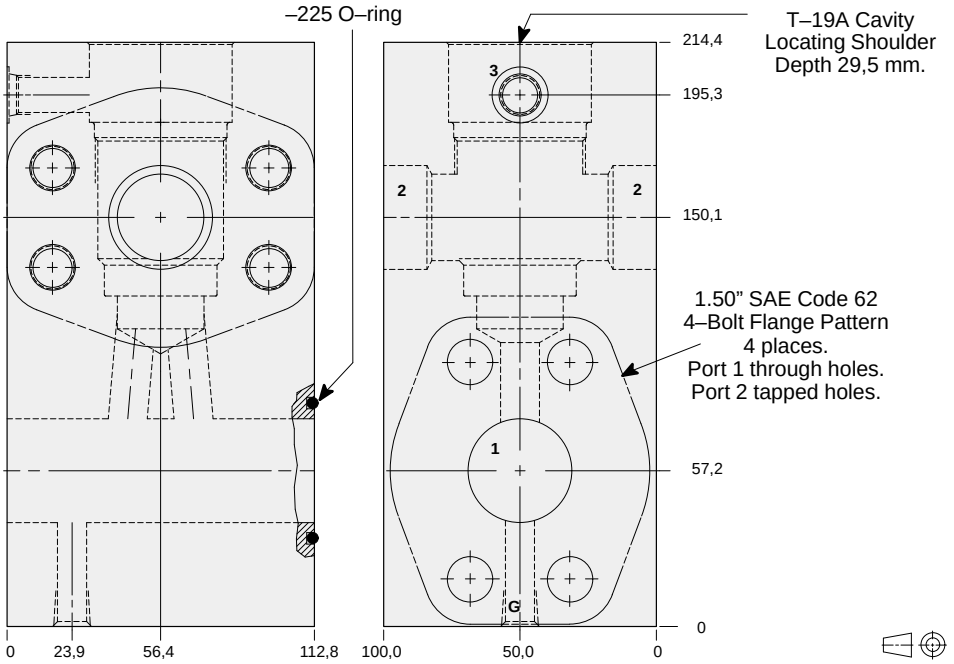

TYPICAL CARTRIDGES USED WITH THIS BODY

RVIA	- ***	Page	1.19
RSJC	- ***	Page	2.07
SQJB	- ***	Page	2.09
RSJE	- ***	Page	2.11
SCIA	- ***	Page	2.13

Cartridge seal type determines O–ring type.

Instructions for ordering complete cartridge and body assemblies. Page viii

Pressure ratings, material specifications. Page 11.02

SAE Specifications. Page 11.03

Mounting Hole Dimensions	*Port 3*	*Gauge Port*	ALUMINIUM		SG IRON	
			Model Code	*List Price*	*Model Code*	*List Price*
Inch	SAE-6	.25 NPTF	**WYA**		**WYA/S**	
Metric	.25 BSPP	.25 BSPP	**WYA/M**		**WYA/T**	

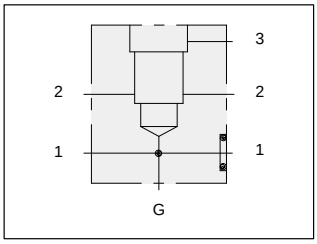

Flange mount through port 1.50” SAE Code 61 body with threaded outlet and gauge port.

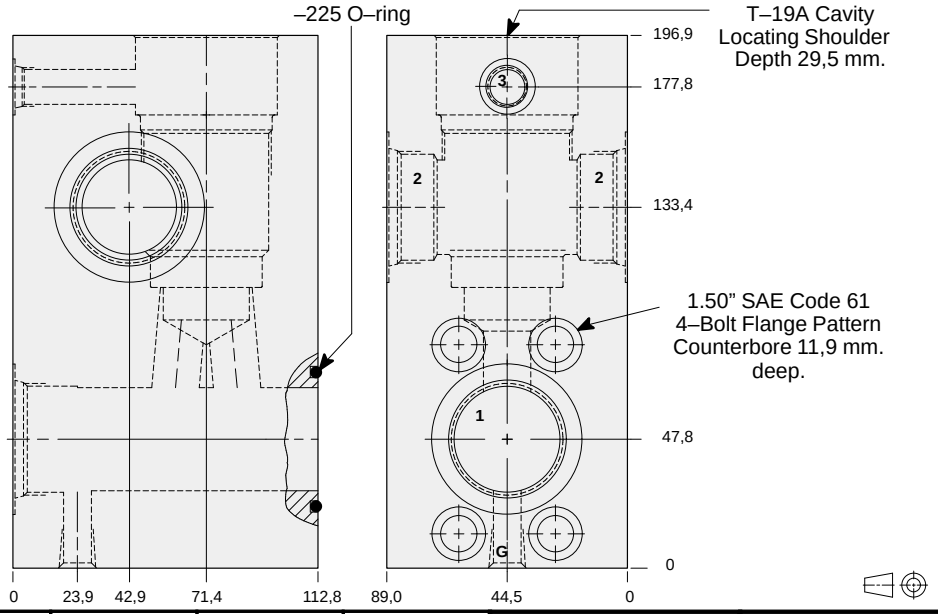

TYPICAL CARTRIDGES USED WITH THIS BODY

RVIA	- ***	Page	1.19
RSJC	- ***	Page	2.07
SQJB	- ***	Page	2.09
RSJE	- ***	Page	2.11
SCIA	- ***	Page	2.13

Cartridge seal type determines O–ring type.

Instructions for ordering complete cartridge and body assemblies. Page viii

Pressure ratings, material specifications. Page 11.02

SAE Specifications. Page 11.03

Mounting Hole Dimensions	*Ports 1 & 2*	*Port 3*	*Gauge Port*	ALUMINIUM		SG IRON	
				Model Code	*List Price*	*Model Code*	*List Price*
Inch	1.25 NPTF	.25 NPTF	.25 NPTF	**WYQ**		**WYQ/S**	
Inch	SAE-20	SAE-6	.25 NPTF	**WYP**		**WYP/S**	
Metric	1.25 BSPP	.25 BSPP	.25 BSPP	**WYO/M**		**WYO/T**	

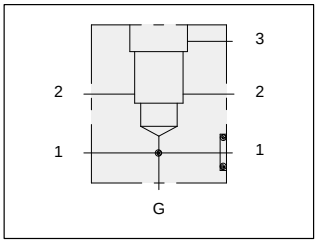

Flange mount through port 1.50” SAE Code 62 body with threaded outlet and gauge port.

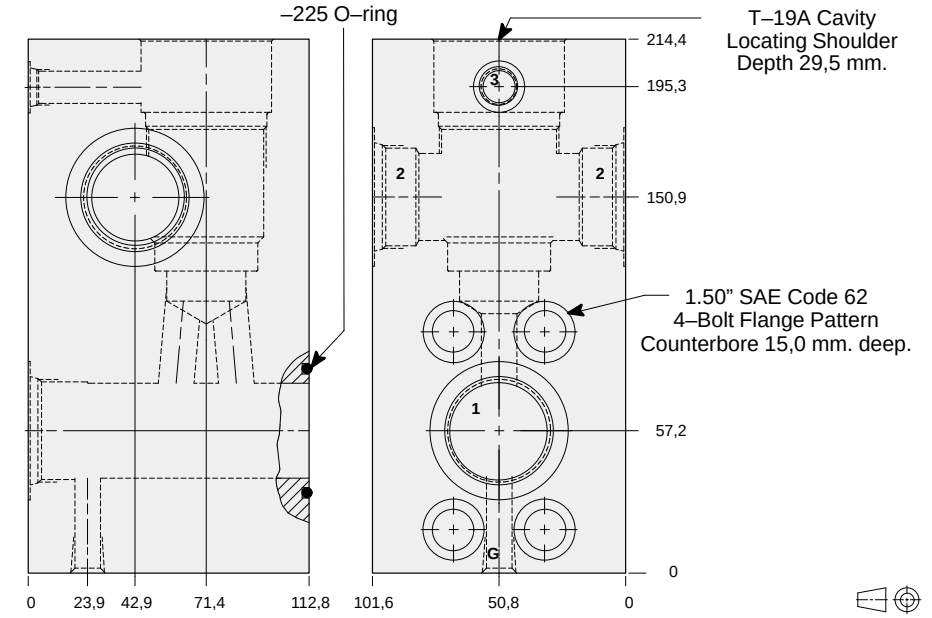

TYPICAL CARTRIDGES USED WITH THIS BODY

RVIA	- ***	Page	1.19
RSJC	- ***	Page	2.07
SQJB	- ***	Page	2.09
RSJE	- ***	Page	2.11
SCIA	- ***	Page	2.13

Cartridge seal type determines O–ring type.

Instructions for ordering complete cartridge and body assemblies. Page viii

Pressure ratings, material specifications. Page 11.02

SAE Specifications. Page 11.03

Mounting Hole Dimensions	*Ports 1 & 2*	*Port 3*	*Gauge Port*	ALUMINIUM		SG IRON	
				Model Code	*List Price*	*Model Code*	*List Price*
Inch	1.25 NPTF	.25 NPTF	.25 NPTF	**WXQ**		**WXQ/S**	
Inch	SAE-20	SAE-6	.25 NPTF	**WXP**		**WXP/S**	
Metric	1.25 BSPP	.25 BSPP	.25 BSPP	**WXO/M**		**WXO/T**	

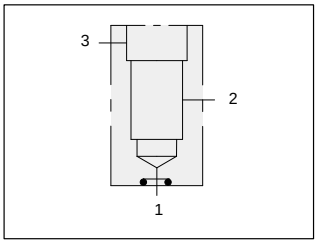

Direct mount 90 degree 2.00” SAE Code 61 flange port body.

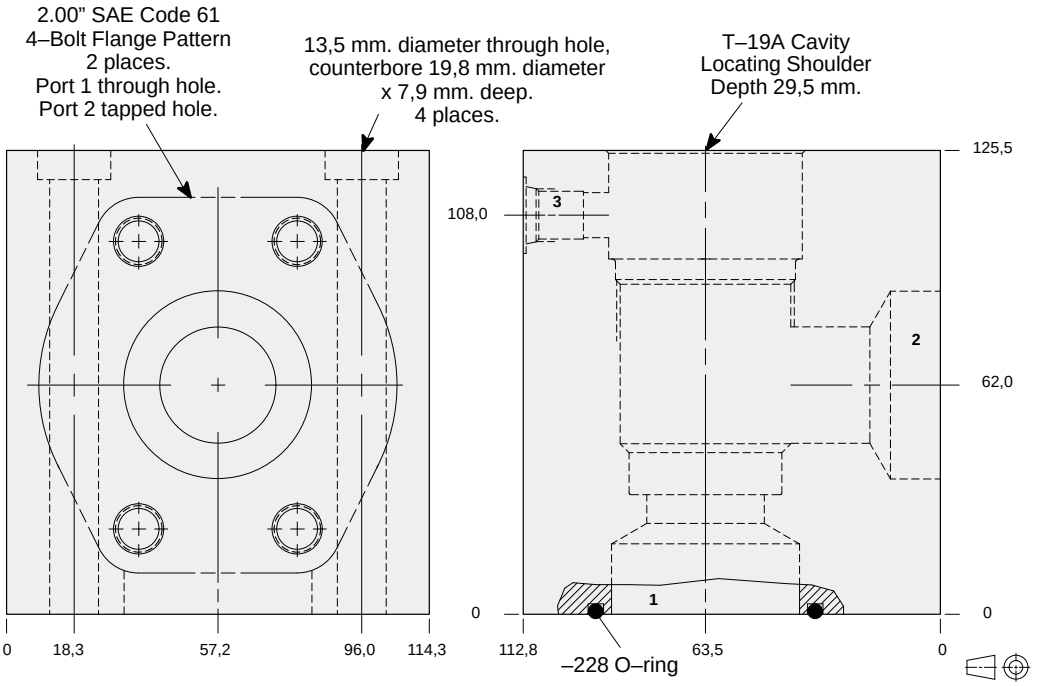

TYPICAL CARTRIDGES USED WITH THIS BODY

CBIA	- ***	Page	4.11
CBIG	- ***	Page	4.13
CBIH	- ***	Page	4.15
CKIB	- ***	Page	4.17

Cartridge seal type determines O–ring type.

Instructions for ordering complete cartridge and body assemblies. Page viii

Pressure ratings, material specifications. Page 11.02

SAE Specifications. Page 11.03

Mounting Hole Dimensions	*Port 3*	ALUMINIUM		SG IRON	
		Model Code	*List Price*	*Model Code*	*List Price*
Inch	SAE-6	**ZGV**		**ZGV/S**	
Metric	.25 BSPP	**ZGV/M**		**ZGV/T**	

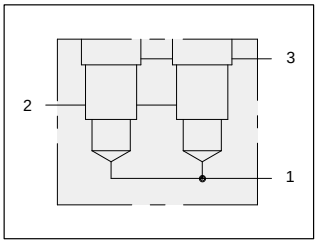

Two cavity 2.00” SAE Code 61 flange port high capacity body.

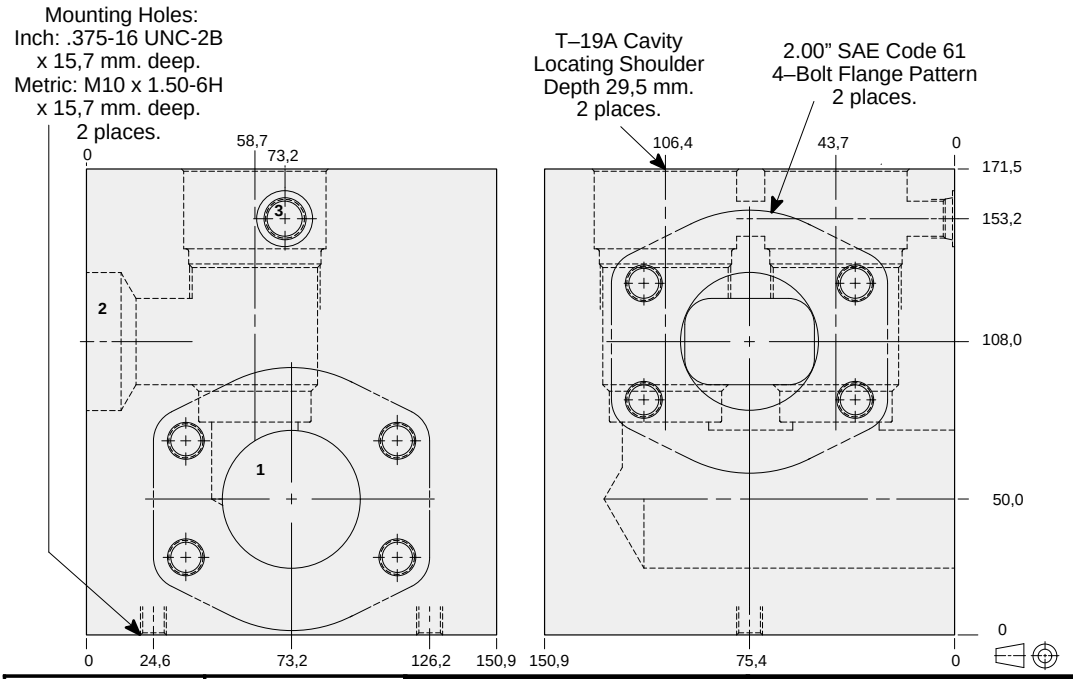

Mounting Hole Dimensions	*Port 3*	ALUMINIUM		SG IRON	
		Model Code	*List Price*	*Model Code*	*List Price*
Inch	SAE-6	**XZZ**		**XZZ/S**	
Metric	.25 BSPP	**XZZ/M**		**XZZ/T**	

TYPICAL CARTRIDGES USED WITH THIS BODY

CBIA	- ***	Page	4.11
CBIG	- ***	Page	4.13
CBIH	- ***	Page	4.15
CKIB	- ***	Page	4.17

Instructions for ordering complete cartridge and body assemblies. Page viii

Pressure ratings, material specifications. Page 11.02

SAE Specifications. Page 11.03

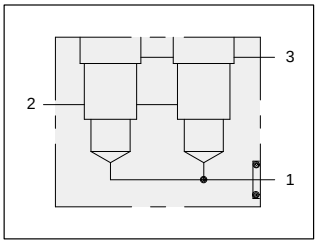

Two cavity 2.00” direct mount SAE Code 61 flange port high capacity body.

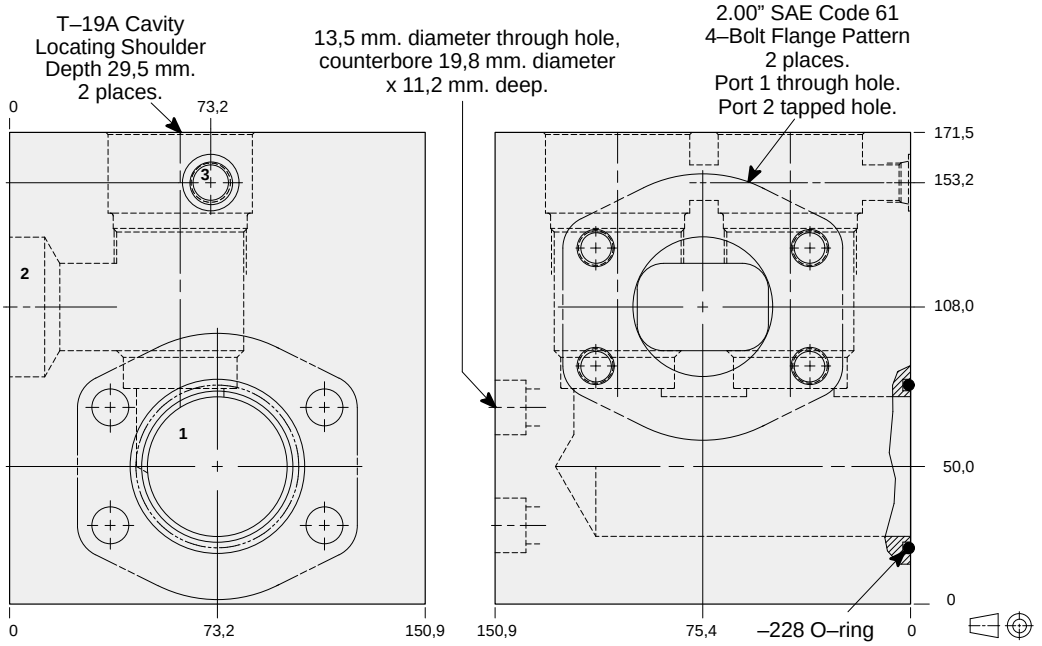

Mounting Hole Dimensions	*Port 3*	ALUMINIUM		SG IRON	
		Model Code	*List Price*	*Model Code*	*List Price*
Inch	SAE-6	**XVD**		**XVD/S**	
Metric	.25 BSPP	**XVD/M**		**XVD/T**	

TYPICAL CARTRIDGES USED WITH THIS BODY

CBIA	- ***	Page	4.11
CBIG	- ***	Page	4.13
CBIH	- ***	Page	4.15
CKIB	- ***	Page	4.17

Cartridge seal type determines O–ring type.

Instructions for ordering complete cartridge and body assemblies. Page viii

Pressure ratings, material specifications. Page 11.02

SAE Specifications. Page 11.03

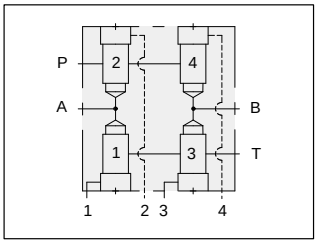

TYPICAL CARTRIDGES USED WITH THIS BODY

LOJC	- ***	Page	9.09
LKJC	- ***	Page	9.11
LPJC	- ***	Page	9.13
LRJC	- ***	Page	9.15

Instructions for ordering complete cartridge and body assemblies. Page viii

Pressure ratings, material specifications. Page 11.02

SAE Specifications. Page 11.03

Four cavity four–way 1.50” SAE Code 61 flange port logic body for directional applications.

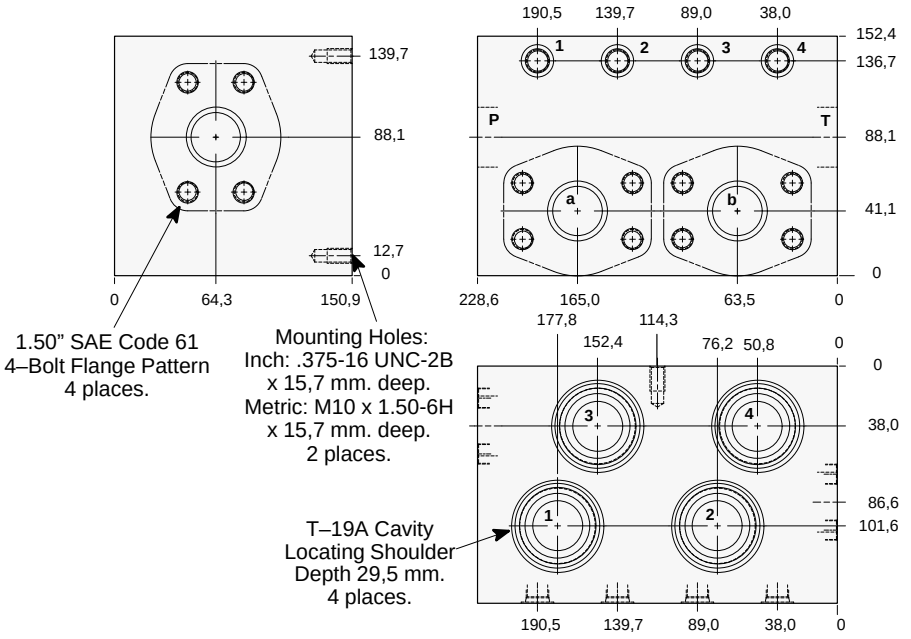

Mounting Hole Dimensions	*Ports 1 & 2, 3 & 4*	ALUMINIUM		SG IRON	
		Model Code	*List Price*	*Model Code*	*List Price*
Inch	SAE-6	**YRD**		**YRD/S**	
Metric	.25 BSPP	**YRD/M**		**YRD/T**	

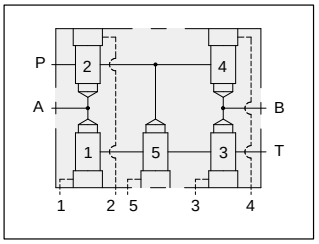

TYPICAL CARTRIDGES USED WITH THIS BODY

LOJC	- ***	Page	9.09
LKJC	- ***	Page	9.11
LPJC	- ***	Page	9.13
LRJC	- ***	Page	9.15

Instructions for ordering complete cartridge and body assemblies. Page viii

Pressure ratings, material specifications. Page 11.02

SAE Specifications. Page 11.03

Five cavity four–way 1.50” SAE Code 61 flange port logic body for directional applications.

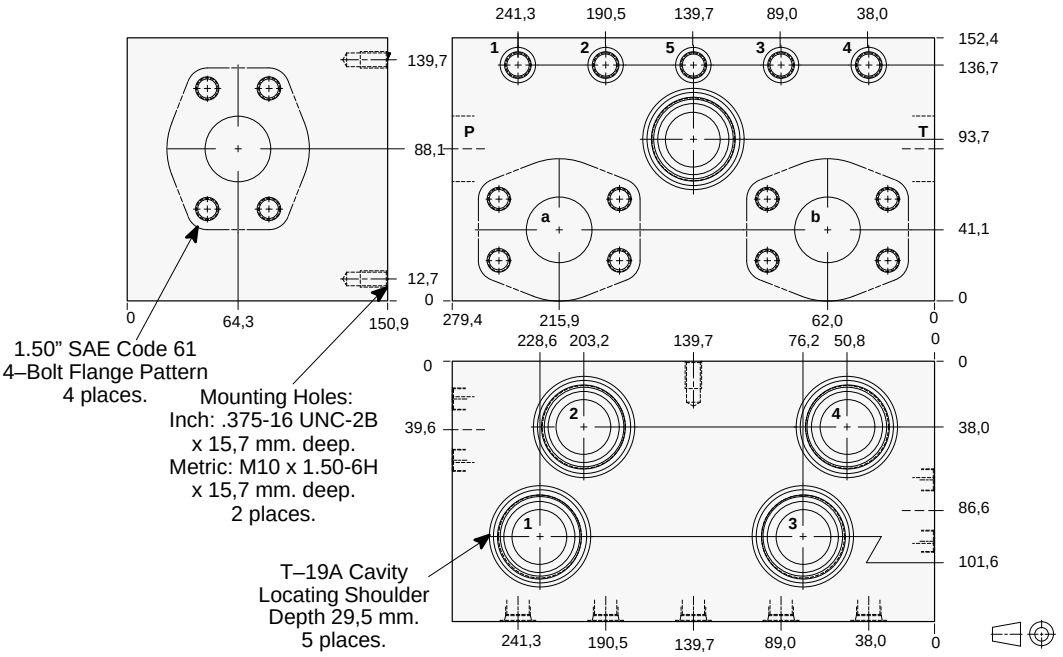

Mounting Hole Dimensions	*Ports 1,2, 3,4 & 5*	ALUMINIUM		SG IRON	
		Model Code	*List Price*	*Model Code*	*List Price*
Inch	SAE-6	**YQD**		**YQD/S**	
Metric	.25 BSPP	**YQD/M**		**YQD/T**	

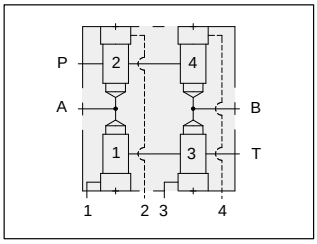

Four cavity four–way 2.00” SAE Code 61 flange port logic body for directional applications.

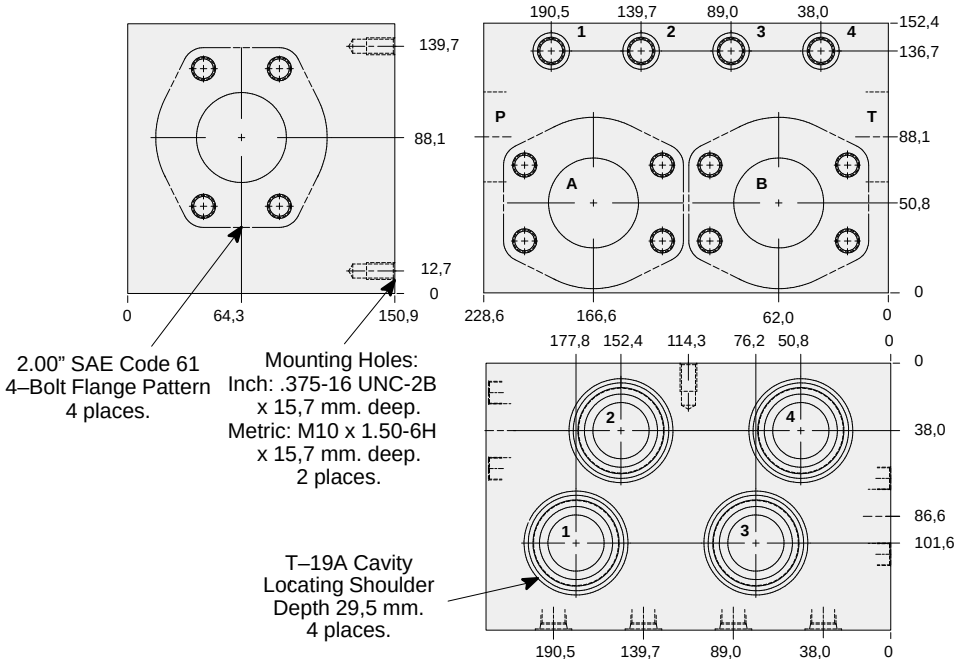

Mounting Hole Dimensions	*Ports 1 & 2, 3 & 4*	ALUMINIUM		SG IRON	
		Model Code	*List Price*	*Model Code*	*List Price*
Inch	SAE-6	**YRC**		**YRC/S**	
Metric	.25 BSPP	**YRC/M**		**YRC/T**	

TYPICAL CARTRIDGES USED WITH THIS BODY

LOJC	- ***	Page	9.09
LKJC	- ***	Page	9.11
LPJC	- ***	Page	9.13
LRJC	- ***	Page	9.15

Instructions for ordering complete cartridge and body assemblies. Page viii

Pressure ratings, material specifications. Page 11.02

SAE Specifications. Page 11.03

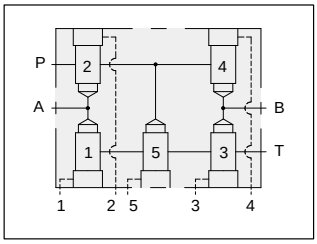

Five cavity four–way 2.00” SAE Code 61 flange port logic body for directional applications.

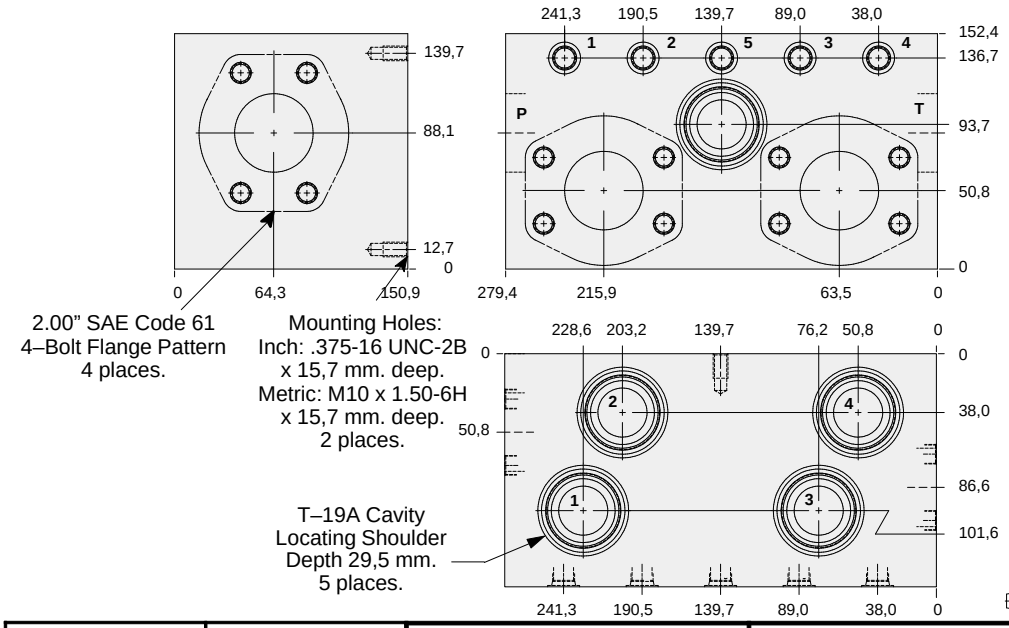

Mounting Hole Dimensions	*Ports 1 & 2, 3 & 4*	ALUMINIUM		SG IRON	
		Model Code	*List Price*	*Model Code*	*List Price*
Inch	SAE-6	**YQC**		**YQC/S**	
Metric	.25 BSPP	**YQC/M**		**YQC/T**	

TYPICAL CARTRIDGES USED WITH THIS BODY

LOJC	- ***	Page	9.09
LKJC	- ***	Page	9.11
LPJC	- ***	Page	9.13
LRJC	- ***	Page	9.15

Instructions for ordering complete cartridge and body assemblies. Page viii

Pressure ratings, material specifications. Page 11.02

SAE Specifications. Page 11.03

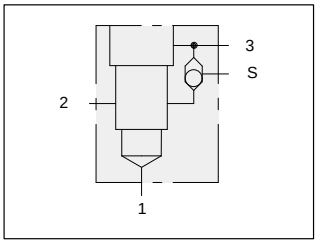

90 degree 1.50” SAE Code 61 flange port body with shuttle.

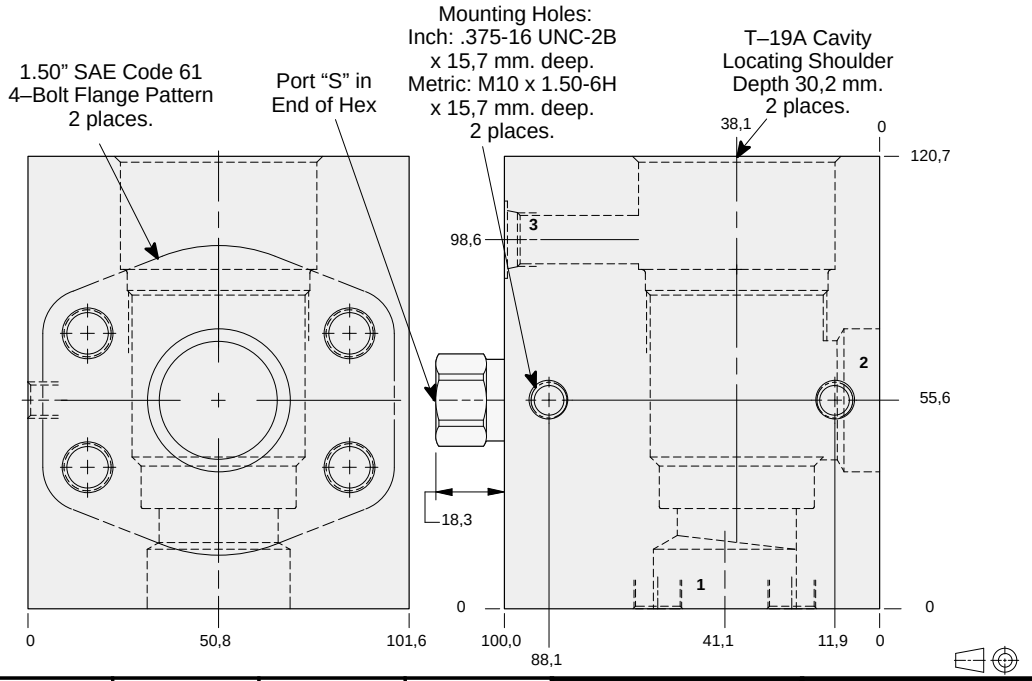

TYPICAL CARTRIDGES USED WITH THIS BODY

CBIA	- ***	Page	4.11
CBIG	- ***	Page	4.13
CBIH	- ***	Page	4.15
CKIB	- ***	Page	4.17

Cartridge seal type determines O–ring type.

Instructions for ordering complete cartridge and body assemblies. Page viii

Pressure ratings, material specifications. Page 11.02

SAE Specifications. Page 11.03

Mounting Hole Dimensions	*Port 3*	*Shuttle Cartridge*	*Port S*	ALUMINIUM		SG IRON	
				Model Code	*List Price*	*Model Code*	*List Price*
Inch	SAE-6	CSAA – EXN	SAE-4	**KGR**		**KGR/S**	
Metric	.25 BSPP	CSAA – BXN	.25 BSPP	**KGR/M**		**KGR/T**	

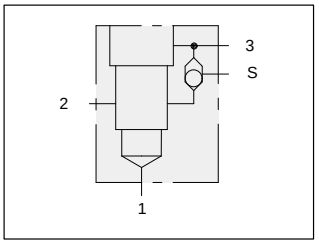

90 degree 1.50” SAE Code 62 flange port body with shuttle.

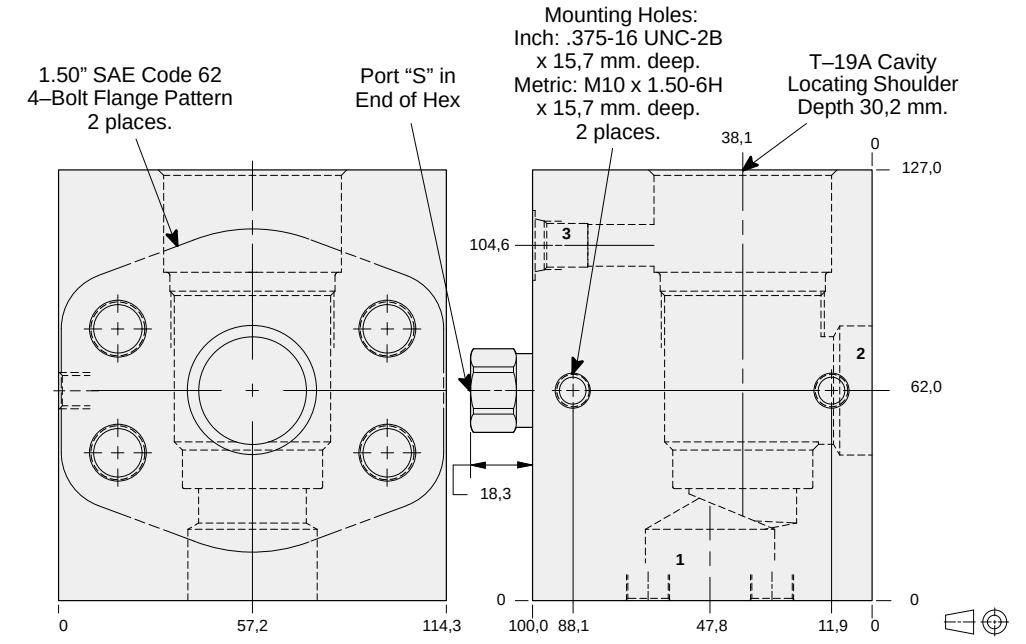

TYPICAL CARTRIDGES USED WITH THIS BODY

CBIA	- ***	Page	4.11
CBIG	- ***	Page	4.13
CBIH	- ***	Page	4.15
CKIB	- ***	Page	4.17

Cartridge seal type determines O–ring type.

Instructions for ordering complete cartridge and body assemblies. Page viii

Pressure ratings, material specifications. Page 11.02

SAE Specifications. Page 11.03

Mounting Hole Dimensions	*Port 3*	*Shuttle Cartridge*	*Gauge Port*	ALUMINIUM		SG IRON	
				Model Code	*List Price*	*Model Code*	*List Price*
Inch	SAE-6	CSAA – EXN	SAE-4	**KG6**		**KG6/S**	
Metric	.25 BSPP	CSAA – BXN	.25 BSPP	**KG6/M**		**KG6/T**	

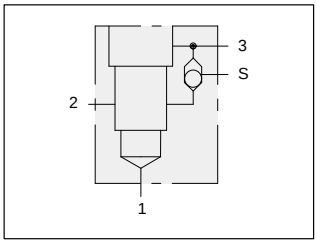

TYPICAL CARTRIDGES USED WITH THIS BODY

CBIA	- ***	Page	4.11
CBIG	- ***	Page	4.13
CBIH	- ***	Page	4.15
CKIB	- ***	Page	4.17

Cartridge seal type determines O–ring type.

Instructions for ordering complete cartridge and body assemblies. Page viii

Pressure ratings, material specifications. Page 11.02

SAE Specifications. Page 11.03

90 degree 2.00” SAE Code 61 flange port body with shuttle.

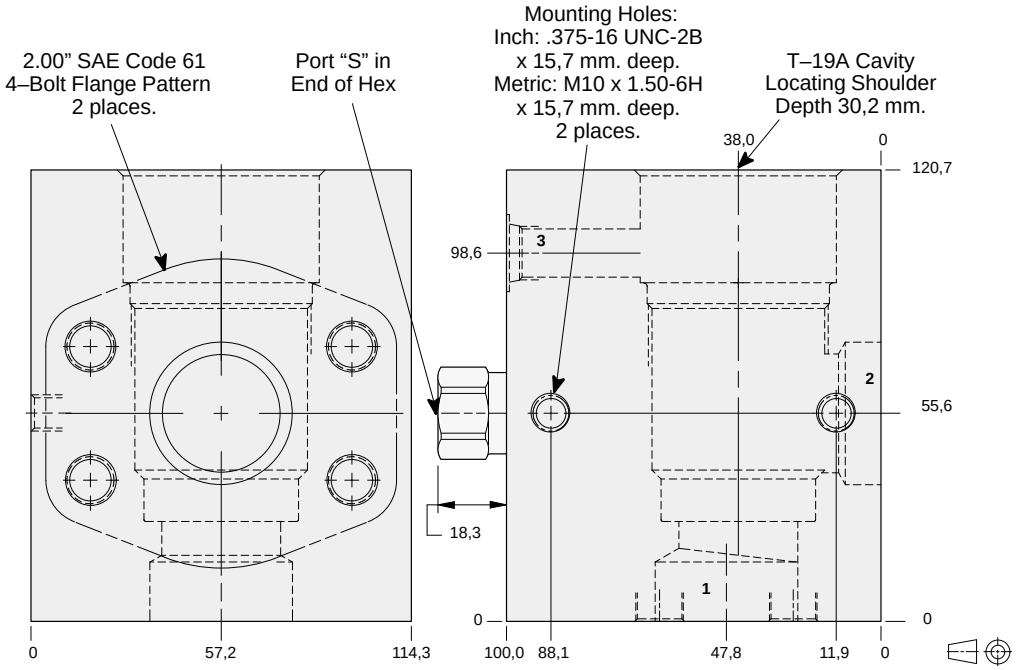

Mounting Hole Dimensions	*Port 3*	*Shuttle Cartridge*	*Port S*	ALUMINIUM		SG IRON	
				Model Code	*List Price*	*Model Code*	*List Price*
Inch	SAE-6	CSAA – EXN	SAE-4	**KGS**		**KGS/S**	
Metric	.25 BSPP	CSAA – BXN	.25 BSPP	**KGS/M**		**KGS/T**	

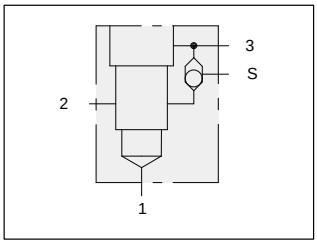

TYPICAL CARTRIDGES USED WITH THIS BODY

CBIA	- ***	Page	4.11
CBIG	- ***	Page	4.13
CBIH	- ***	Page	4.15
CKIB	- ***	Page	4.17

Cartridge seal type determines O–ring type.

Instructions for ordering complete cartridge and body assemblies. Page viii

Pressure ratings, material specifications. Page 11.02

SAE Specifications. Page 11.03

90 degree 2.00” SAE Code 62 flange port body with shuttle.

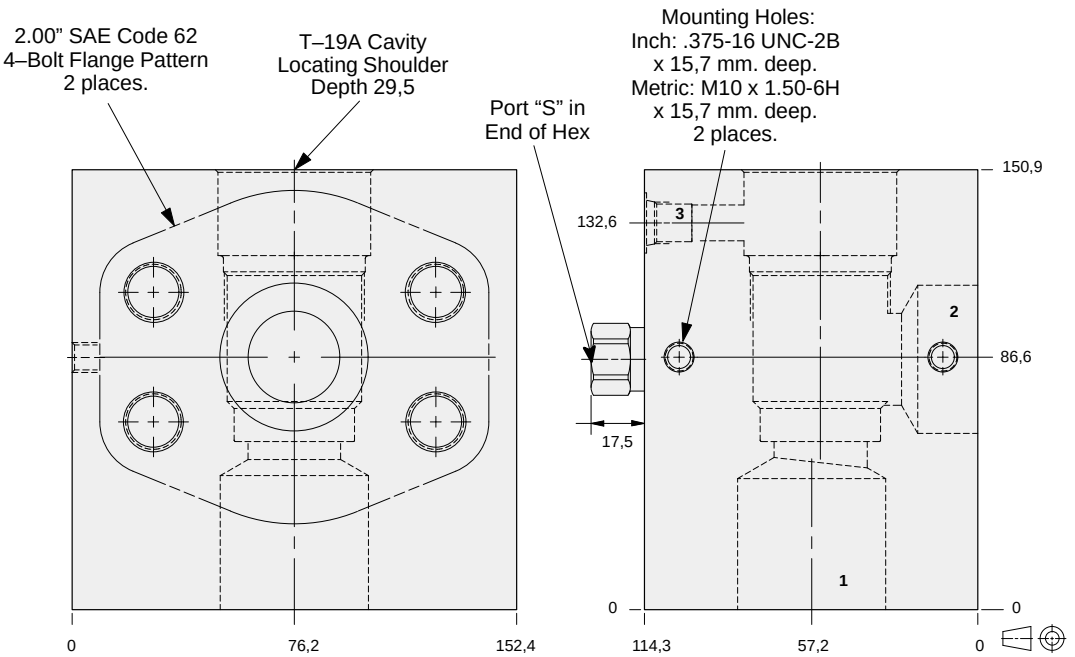

Mounting Hole Dimensions	*Port 3*	*Shuttle Cartridge*	*Gauge Port*	ALUMINIUM		SG IRON	
				Model Code	*List Price*	*Model Code*	*List Price*
Inch	SAE-6	CSAA – EXN	SAE-4	**KG8**		**KG8/S**	
Metric	.25 BSPP	CSAA – BXN	.25 BSPP	**KG8/M**		**KG8/T**	

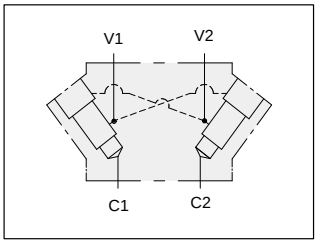

Two cavity cross–piloted inline 1.50” SAE Code 61 flange port body for load control applications.

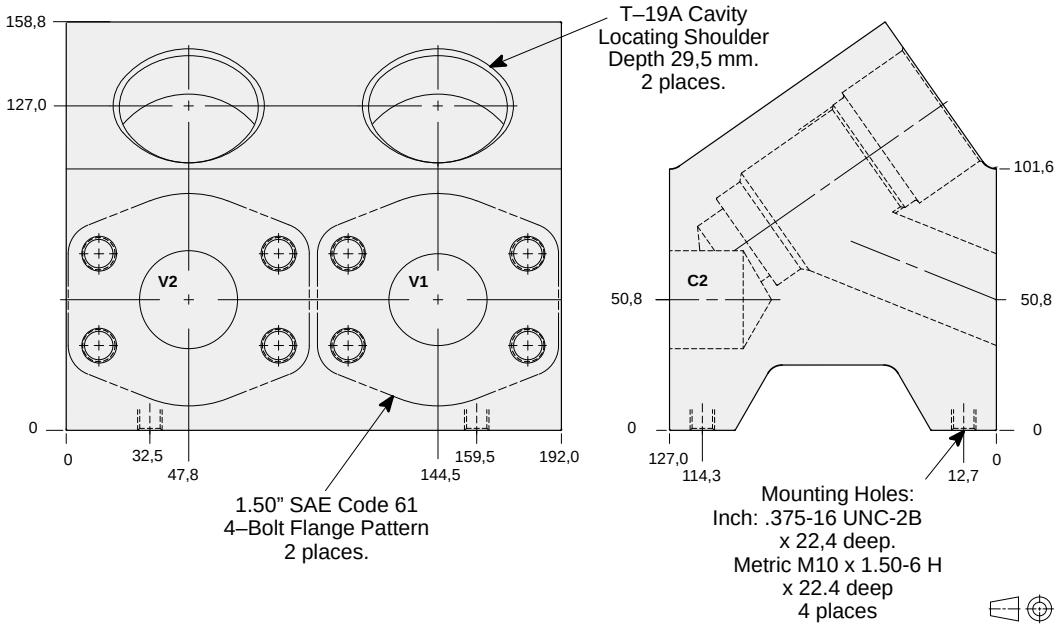

TYPICAL CARTRIDGES USED WITH THIS BODY

CBIA	- ***	Page	4.11
CBIG	- ***	Page	4.13
CBIH	- ***	Page	4.15
CKIB	- ***	Page	4.17

Instructions for ordering complete cartridge and body assemblies. Page viii

Pressure ratings, material specifications. Page 11.02

SAE Specifications. Page 11.03

Mounting Hole Dimensions	ALUMINIUM		SG IRON	
	Model Code	*List Price*	*Model Code*	*List Price*
Inch	**XZP**		**XZP/S**	
Metric	**XZP/M**		**XZP/T**	

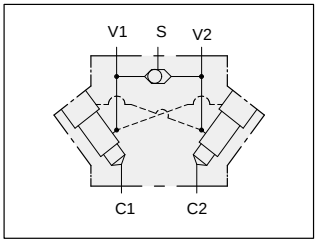

Two cavity cross–piloted inline 1.50” SAE Code 61 flange port body with shuttle for load control applications.

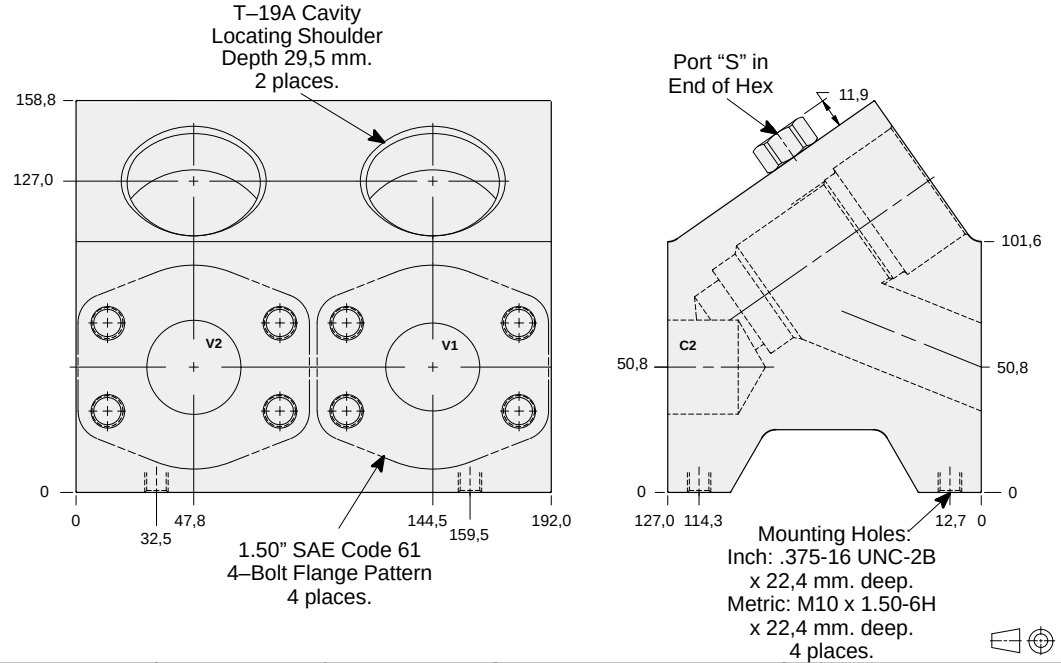

TYPICAL CARTRIDGES USED WITH THIS BODY

CBIA	- ***	Page	4.11
CBIG	- ***	Page	4.13
CBIH	- ***	Page	4.15
CKIB	- ***	Page	4.17

Cartridge seal type determines O–ring type.

Instructions for ordering complete cartridge and body assemblies. Page viii

Pressure ratings, material specifications. Page 11.02

SAE Specifications. Page 11.03

Mounting Hole Dimensions	*Shuttle Cartridge*	*Port S*	ALUMINIUM		SG IRON	
			Model Code	*List Price*	*Model Code*	*List Price*
Inch	CSAA – EXN	SAE-4	**XZQ**		**XZQ/S**	
Metric	CSAA – BXN	.25 BSPP	**XZQ/M**		**XZQ/T**	

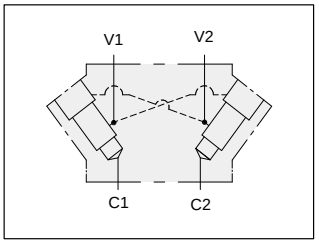

Two cavity cross–piloted inline 2.00” SAE Code 61 flange port body for load control applications.

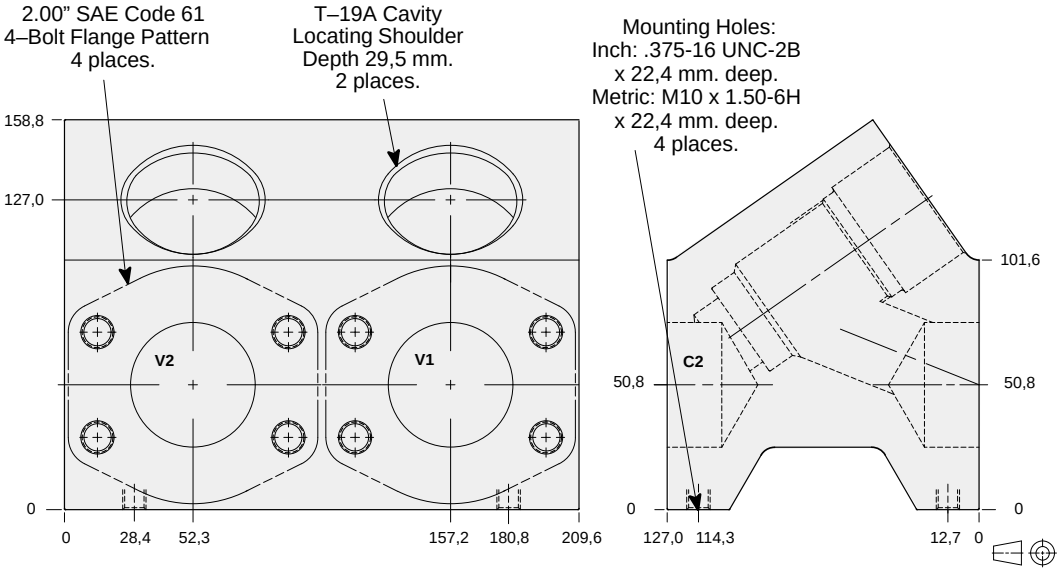

TYPICAL CARTRIDGES USED WITH THIS BODY

CBIA	- ***	Page	4.11
CBIG	- ***	Page	4.13
CBIH	- ***	Page	4.15
CKIB	- ***	Page	4.17

Instructions for ordering complete cartridge and body assemblies. Page viii

Pressure ratings, material specifications. Page 11.02

SAE Specifications. Page 11.03

Mounting Hole Dimensions	ALUMINIUM		SG IRON	
	Model Code	*List Price*	*Model Code*	*List Price*
Inch	**XZR**		**XZR/S**	
Metric	**XZR/M**		**XZR/T**	

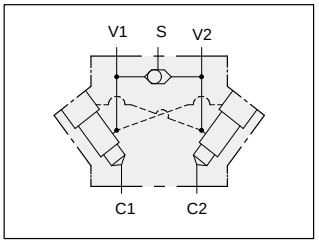

Two cavity cross–piloted inline 2.00” SAE Code 61 flange port body with shuttle for load control applications.

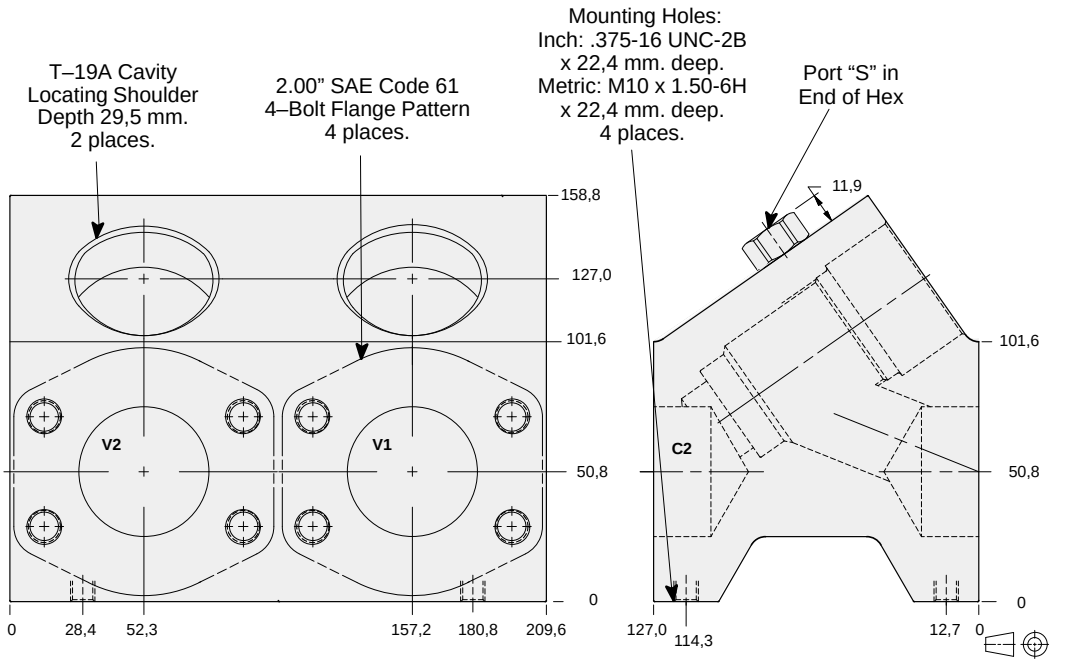

TYPICAL CARTRIDGES USED WITH THIS BODY

CBIA	- ***	Page	4.11
CBIG	- ***	Page	4.13
CBIH	- ***	Page	4.15
CKIB	- ***	Page	4.17

Cartridge seal type determines O–ring type.

Instructions for ordering complete cartridge and body assemblies. Page viii

Pressure ratings, material specifications. Page 11.02

SAE Specifications. Page 11.03

Mounting Hole Dimensions	*Shuttle Cartridge*	*Port S*	ALUMINIUM		SG IRON	
			Model Code	*List Price*	*Model Code*	*List Price*
Inch	CSAA – EXN	SAE-4	**XZS**		**XZS/S**	
Metric	CSAA – BXN	.25 BSPP	**XZS/M**		**XZS/T**	

LINE MOUNT BODIES

- Aluminium rated to 210 bar and SG Iron rated to 350 bar.

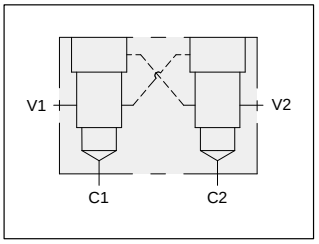

Two cavity 90 degree cross–piloted 1.50” SAE Code 61 flange port body for load control applications.

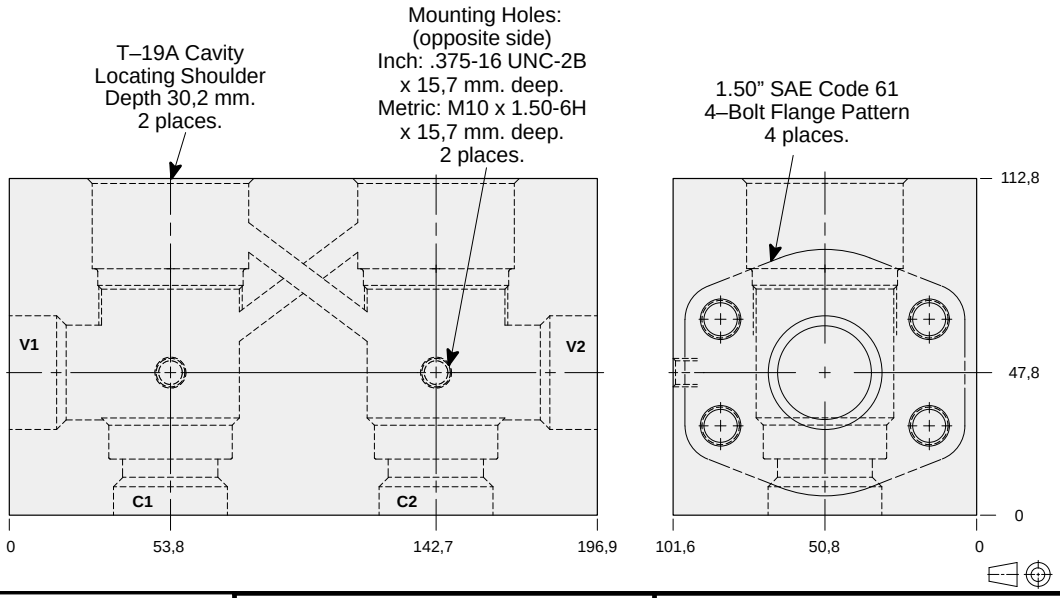

TYPICAL CARTRIDGES USED WITH THIS BODY

CBIA	- ***	Page	4.11
CBIG	- ***	Page	4.13
CBIH	- ***	Page	4.15
CKIB	- ***	Page	4.17

Instructions for ordering complete cartridge and body assemblies. Page viii

Pressure ratings, material specifications. Page 11.02

SAE Specifications. Page 11.03

Mounting Hole Dimensions	ALUMINIUM		SG IRON	
	Model Code	*List Price*	*Model Code*	*List Price*
Inch	**YMR**		**YMR/S**	
Metric	**YMR/M**		**YMR/T**	

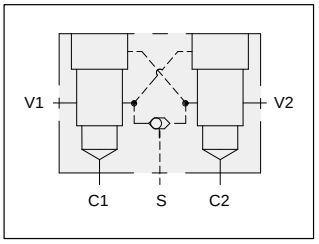

Two cavity 90 degree cross–piloted 1.50” SAE Code 61 flange port body with shuttle for load control applications.

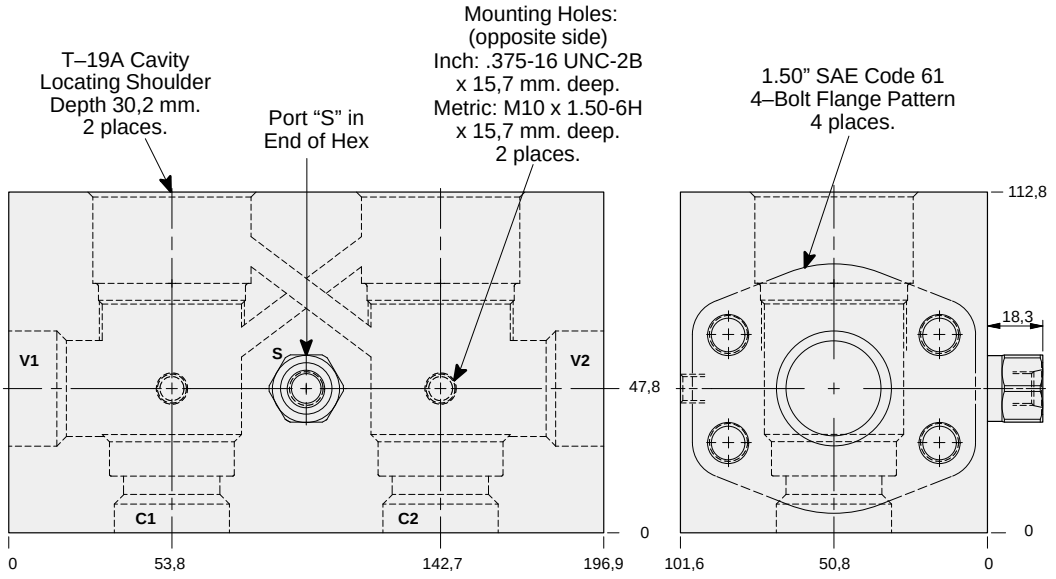

TYPICAL CARTRIDGES USED WITH THIS BODY

CBIA	- ***	Page	4.11
CBIG	- ***	Page	4.13
CBIH	- ***	Page	4.15
CKIB	- ***	Page	4.17

Cartridge seal type determines O–ring type.

Instructions for ordering complete cartridge and body assemblies. Page viii

Pressure ratings, material specifications. Page 11.02

SAE Specifications. Page 11.03

Mounting Hole Dimensions	*Shuttle Cartridge*	*Port S*	ALUMINIUM		SG IRON	
			Model Code	*List Price*	*Model Code*	*List Price*
Inch	CSAA – EXN	SAE-4	**YNR**		**YNR/S**	
Metric	CSAA – BXN	.25 BSPP	**YNR/M**		**YNR/T**	

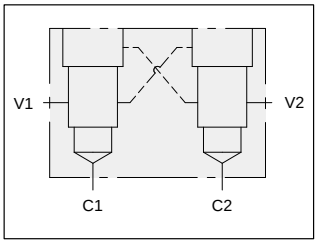

Two cavity 90 degree cross–piloted 1.50” SAE Code 62 flange port body for load control applications.

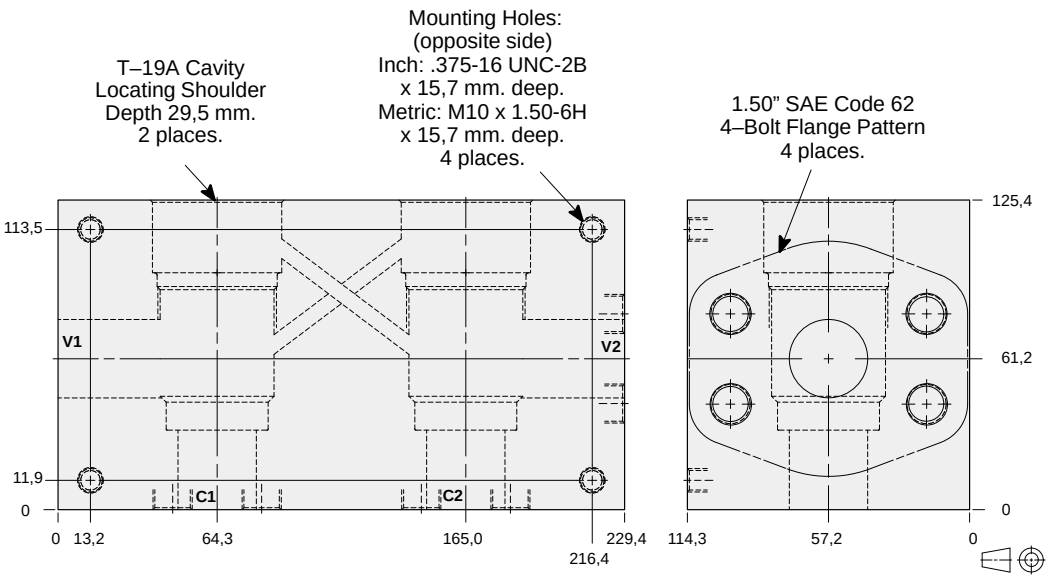

TYPICAL CARTRIDGES USED WITH THIS BODY

CBIA	- ***	Page	4.11
CBIG	- ***	Page	4.13
CBIH	- ***	Page	4.15
CKIB	- ***	Page	4.17

Instructions for ordering complete cartridge and body assemblies. Page viii

Pressure ratings, material specifications. Page 11.02

SAE Specifications. Page 11.03

Mounting Hole Dimensions	ALUMINIUM		SG IRON	
	Model Code	*List Price*	*Model Code*	*List Price*
Inch	**YM6**		**YM6/S**	
Metric	**YM6/M**		**YM6/T**	

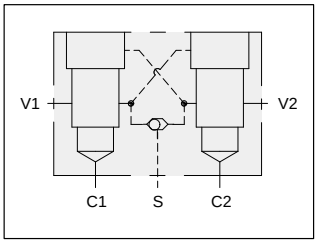

Two cavity 90 degree cross–piloted 1.50” SAE Code 62 flange port body with shuttle for load control applications.

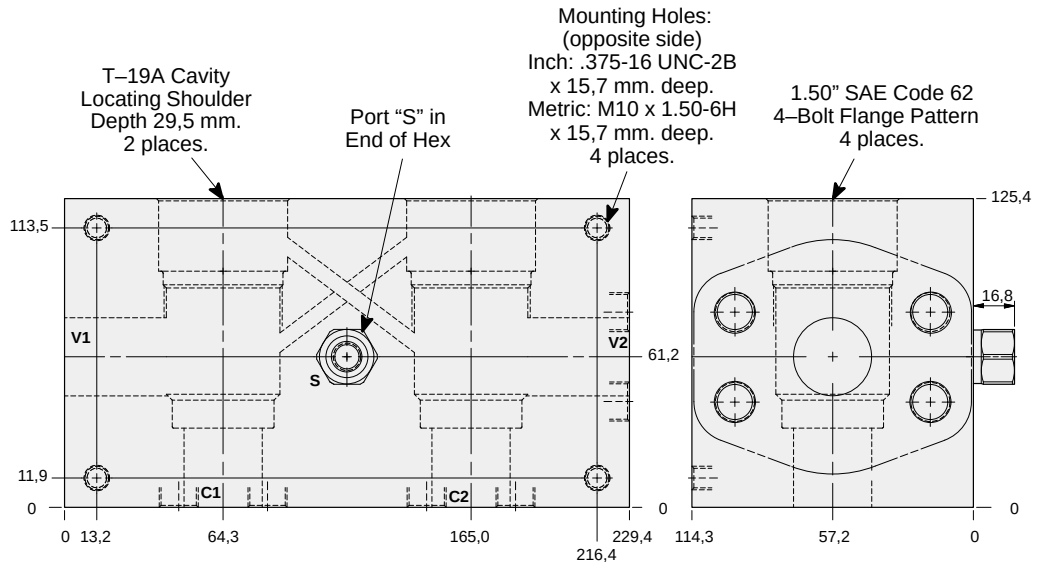

TYPICAL CARTRIDGES USED WITH THIS BODY

CBIA	- ***	Page	4.11
CBIG	- ***	Page	4.13
CBIH	- ***	Page	4.15
CKIB	- ***	Page	4.17

Cartridge seal type determines O–ring type.

Instructions for ordering complete cartridge and body assemblies. Page viii

Pressure ratings, material specifications. Page 11.02

SAE Specifications. Page 11.03

Mounting Hole Dimensions	*Shuttle Cartridge*	*Port S*	ALUMINIUM		SG IRON	
			Model Code	*List Price*	*Model Code*	*List Price*
Inch	CSAA – EXN	SAE-4	**YN6**		**YN6/S**	
Metric	CSAA – BXN	.25 BSPP	**YN6/M**		**YN6/T**	

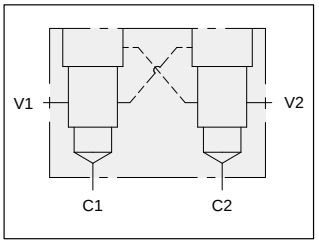

Two cavity 90 degree cross–piloted 2.00” SAE Code 61 flange port body for load control applications.

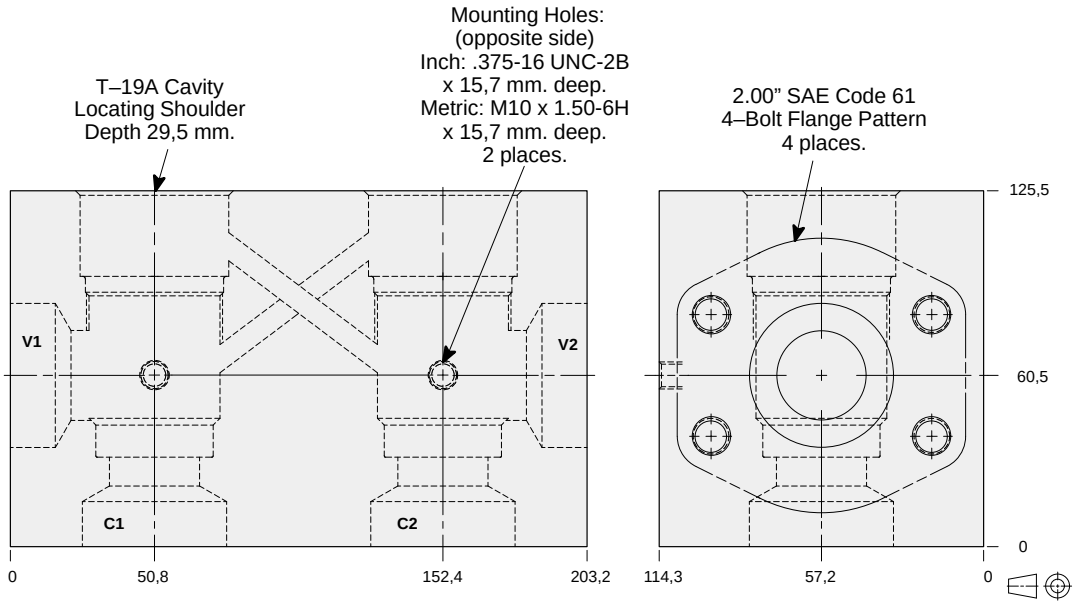

TYPICAL CARTRIDGES USED WITH THIS BODY

CBIA - *** Page 4.11
CBIG - *** Page 4.13
CBIH - *** Page 4.15
CKIB - *** Page 4.17

Instructions for ordering complete cartridge and body assemblies. Page viii

Pressure ratings, material specifications. Page 11.02

SAE Specifications. Page 11.03

Mounting Hole Dimensions	ALUMINIUM		SG IRON	
	Model Code	*List Price*	*Model Code*	*List Price*
Inch	**YMS**		**YMS/S**	
Metric	**YMS/M**		**YMS/T**	

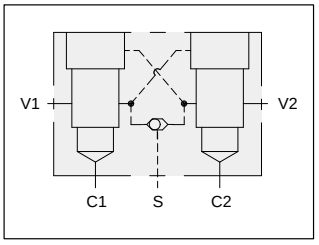

Two cavity 90 degree cross–piloted 2.00” SAE Code 61 flange port body with shuttle for load control applications.

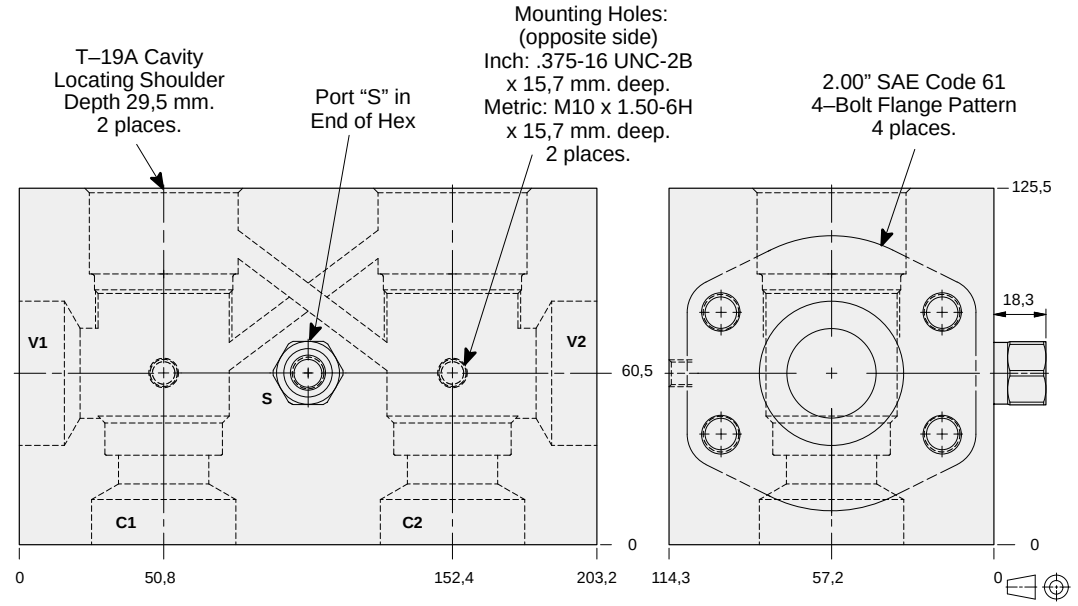

TYPICAL CARTRIDGES USED WITH THIS BODY

CBIA - *** Page 4.11
CBIG - *** Page 4.13
CBIH - *** Page 4.15
CKIB - *** Page 4.17

Cartridge seal type determines O–ring type.

Instructions for ordering complete cartridge and body assemblies. Page viii

Pressure ratings, material specifications. Page 11.02

SAE Specifications. Page 11.03

Mounting Hole Dimensions	*Shuttle Cartridge*	*Port S*	ALUMINIUM		SG IRON	
			Model Code	*List Price*	*Model Code*	*List Price*
Inch	CSAA – EXN	SAE-4	**YNS**		**YNS/S**	
Metric	CSAA – BXN	.25 BSPP	**YNS/M**		**YNS/T**	

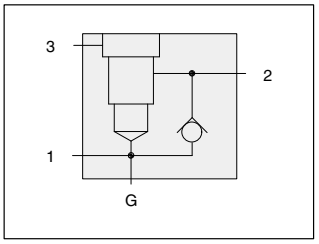

Body with reverse free flow check and gauge port.

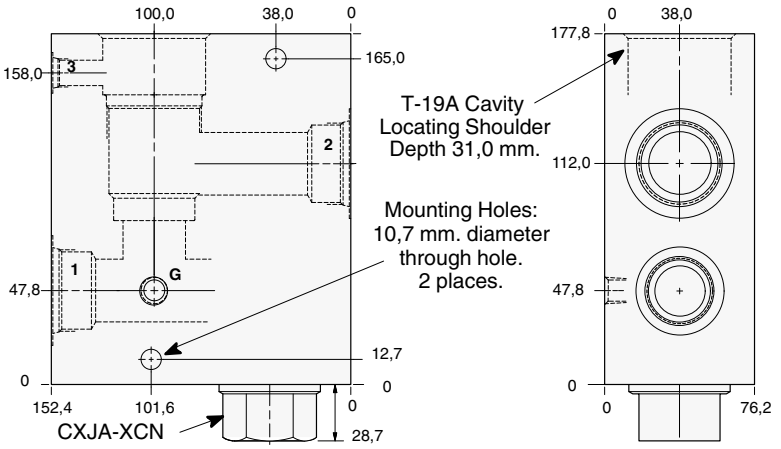

TYPICAL CARTRIDGES USED WITH THIS BODY

RVIA	- ***	Page	1.19
RSJC	- ***	Page	2.07
SQJB	- ***	Page	2.09
RSJE	- ***	Page	2.11

Cartridge seal type determines check valve seal type.

Instructions for ordering complete cartridge and body assemblies. Page viii

Pressure ratings, material specifications. Page 11.02

Ports 1 & 2	*Port 3*	*Gauge Port*	ALUMINIUM		SG IRON	
			Model Code	*List Price*	*Model Code*	*List Price*
.75 NPTF	.25 NPTF	.25 NPTF	**K6D**		**K6D/S**	
1.00 NPTF	.25 NPTF	.25 NPTF	**K6E**		**K6E/S**	
1.25 NPTF	.25 NPTF	.25 NPTF	**K6F**		**K6F/S**	
SAE-12	SAE-6	.25 NPTF	**K6L**		**K6L/S**	
SAE-16	SAE-6	.25 NPTF	**K6M**		**K6M/S**	
SAE-20	SAE-6	.25 NPTF	**K6N**		**K6N/S**	
.75 BSPP	.25 BSPP	.25 BSPP	**K6W**		**K6W/S**	
1.00 BSPP	.25 BSPP	.25 BSPP	**K6X**		**K6X/S**	
1.25 BSPP	.25 BSPP	.25 BSPP	**K6Y**		**K6Y/S**	

- Aluminium rated to 210 bar and SG Iron rated to 350 bar.

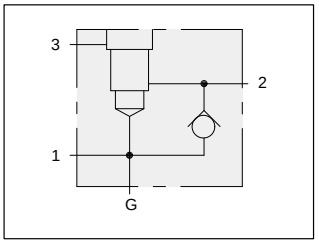

1.25” SAE Code 61 flange port body with reverse free flow check and gauge port.

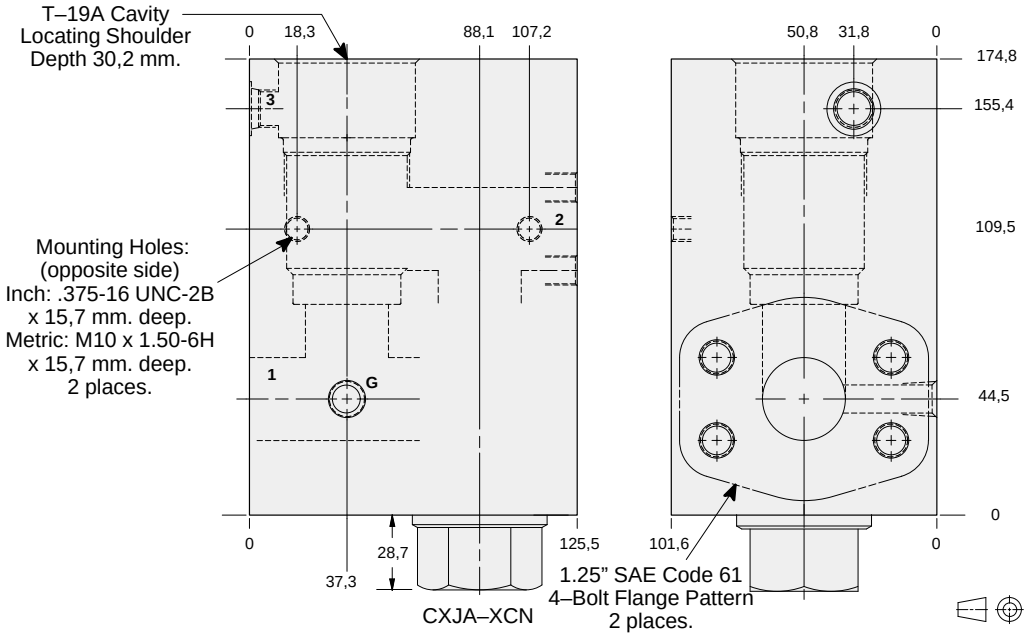

TYPICAL CARTRIDGES USED WITH THIS BODY

RVIA	- ***	Page	1.19
RSJC	- ***	Page	2.07
SQJB	- ***	Page	2.09
RSJE	- ***	Page	2.11

Cartridge seal type determines check valve seal type.

Instructions for ordering complete cartridge and body assemblies. Page viii

Pressure ratings, material specifications. Page 11.02

SAE Specifications. Page 11.03

Mounting Hole Dimensions	*Port 3*	*Gauge Port*	ALUMINIUM		SG IRON	
			Model Code	*List Price*	*Model Code*	*List Price*
Inch	SAE-6	.25 NPTF	**K6Q**		**K6Q/S**	
Metric	.25 BSPP	.25 BSPP	**K6Q/M**		**K6Q/T**	

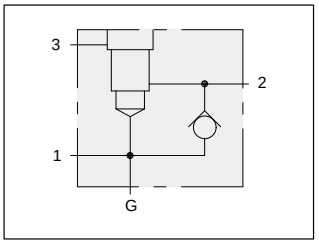

1.25” SAE Code 62 flange port body with reverse free flow check and gauge port.

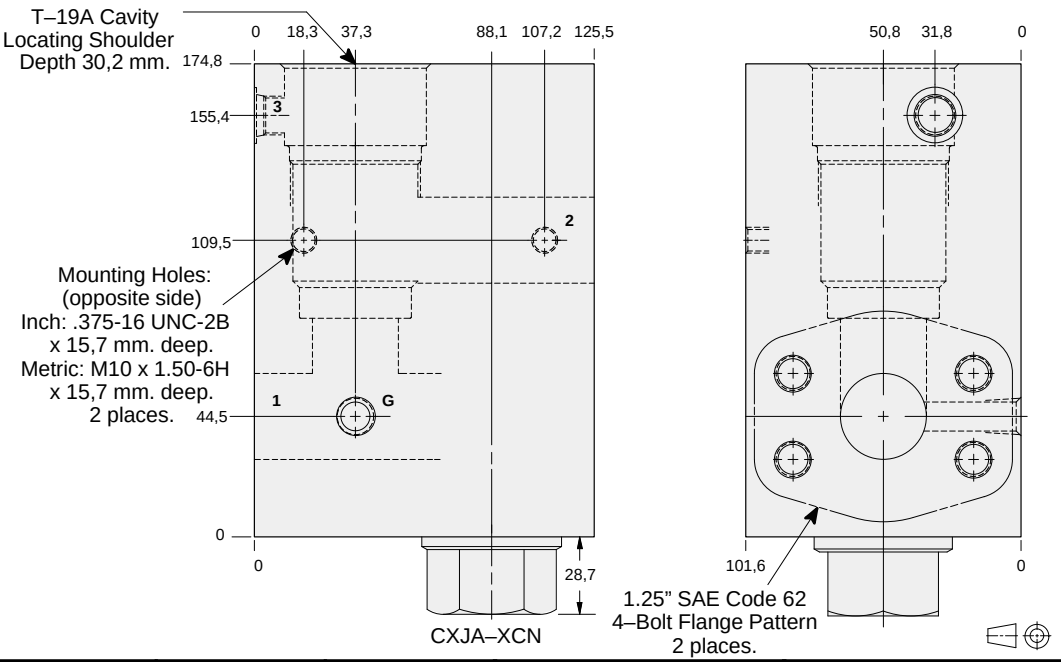

TYPICAL CARTRIDGES USED WITH THIS BODY

RVIA	- ***	Page	1.19
RSJC	- ***	Page	2.07
SQJB	- ***	Page	2.09
RSJE	- ***	Page	2.11

Cartridge seal type determines check valve seal type.

Instructions for ordering complete cartridge and body assemblies. Page viii

Pressure ratings, material specifications. Page 11.02

SAE Specifications. Page 11.03

Mounting Hole Dimensions	*Port 3*	*Gauge Port*	ALUMINIUM		SG IRON	
			Model Code	*List Price*	*Model Code*	*List Price*
Inch	SAE-6	.25 NPTF	**K65**		**K65/S**	
Metric	.25 BSPP	.25 BSPP	**K65/M**		**K65/T**	

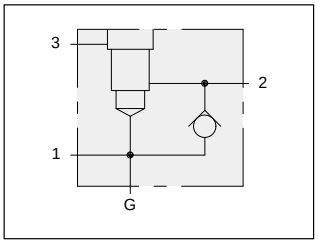

TYPICAL CARTRIDGES USED WITH THIS BODY

RVIA	- ***	Page	1.19
RSJC	- ***	Page	2.07
SQJB	- ***	Page	2.09
RSJE	- ***	Page	2.11

Cartridge seal type determines check valve seal type.

Instructions for ordering complete cartridge and body assemblies. Page viii

Pressure ratings, material specifications. Page 11.02

SAE Specifications. Page 11.03

1.50” SAE Code 61 flange port body with reverse free flow check and gauge port.

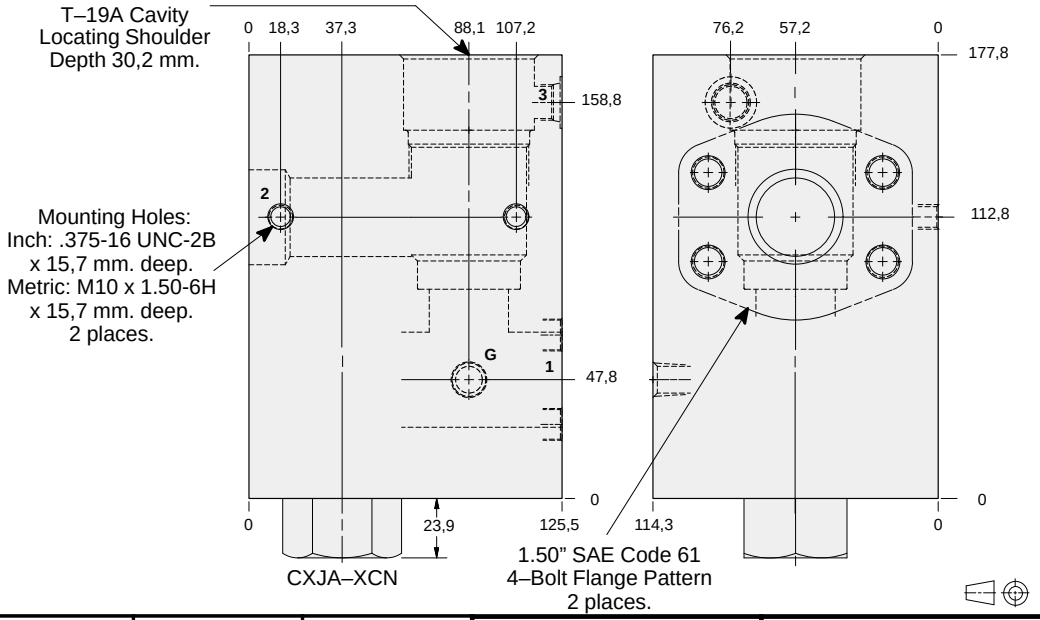

Mounting Hole Dimensions	*Port 3*	*Gauge Port*	ALUMINIUM		SG IRON	
			Model Code	*List Price*	*Model Code*	*List Price*
Inch	SAE-6	.25 NPTF	**K6R**		**K6R/S**	
Metric	.25 BSPP	.25 BSPP	**K6R/M**		**K6R/T**	

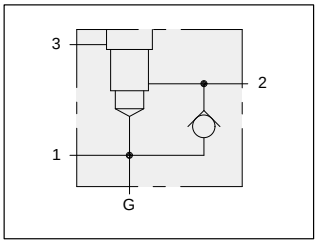

TYPICAL CARTRIDGES USED WITH THIS BODY

RVIA	- ***	Page	1.19
RSJC	- ***	Page	2.07
SQJB	- ***	Page	2.09
RSJE	- ***	Page	2.11

Cartridge seal type determines check valve seal type.

Instructions for ordering complete cartridge and body assemblies. Page viii

Pressure ratings, material specifications. Page 11.02

SAE Specifications. Page 11.03

1.50” SAE Code 62 flange port body with reverse free flow check and gauge port.

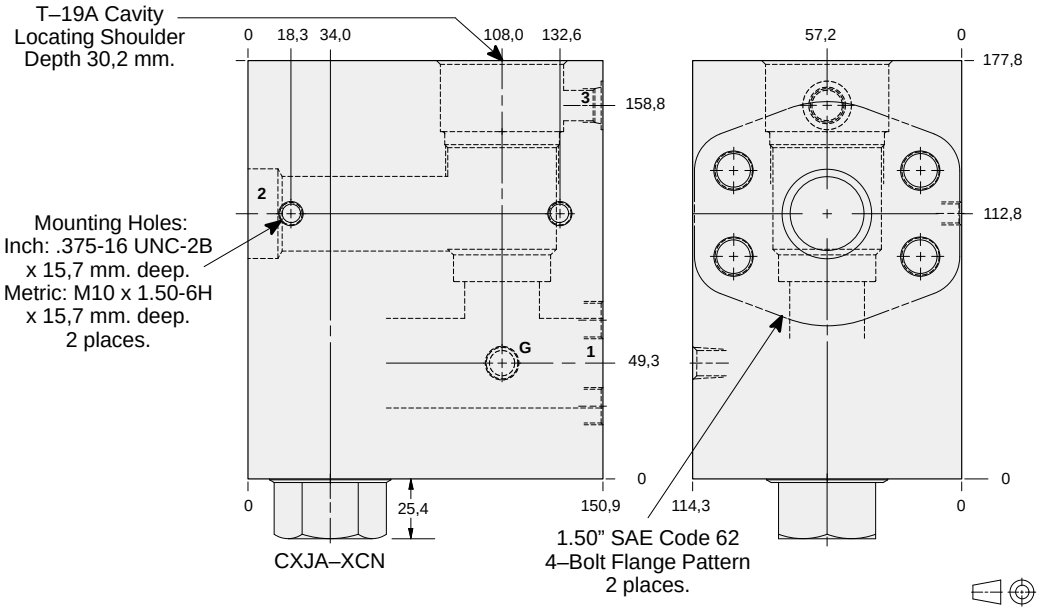

Mounting Hole Dimensions	*Port 3*	*Gauge Port*	ALUMINIUM		SG IRON	
			Model Code	*List Price*	*Model Code*	*List Price*
Inch	SAE-6	.25 NPTF	**K66**		**K66/S**	
Metric	.25 BSPP	.25 BSPP	**K66/M**		**K66/T**	

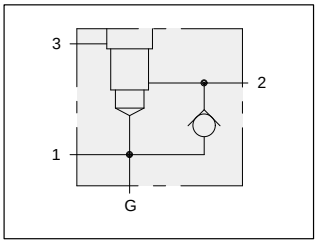

TYPICAL CARTRIDGES USED WITH THIS BODY

RVIA	- ***	Page	1.19
RSJC	- ***	Page	2.07
SQJB	- ***	Page	2.09
RSJE	- ***	Page	2.11

Cartridge seal type determines check valve seal type.

Instructions for ordering complete cartridge and body assemblies. Page viii

Pressure ratings, material specifications. Page 11.02

SAE Specifications. Page 11.03

2.00” SAE Code 61 flange port body with reverse free flow check and gauge port.

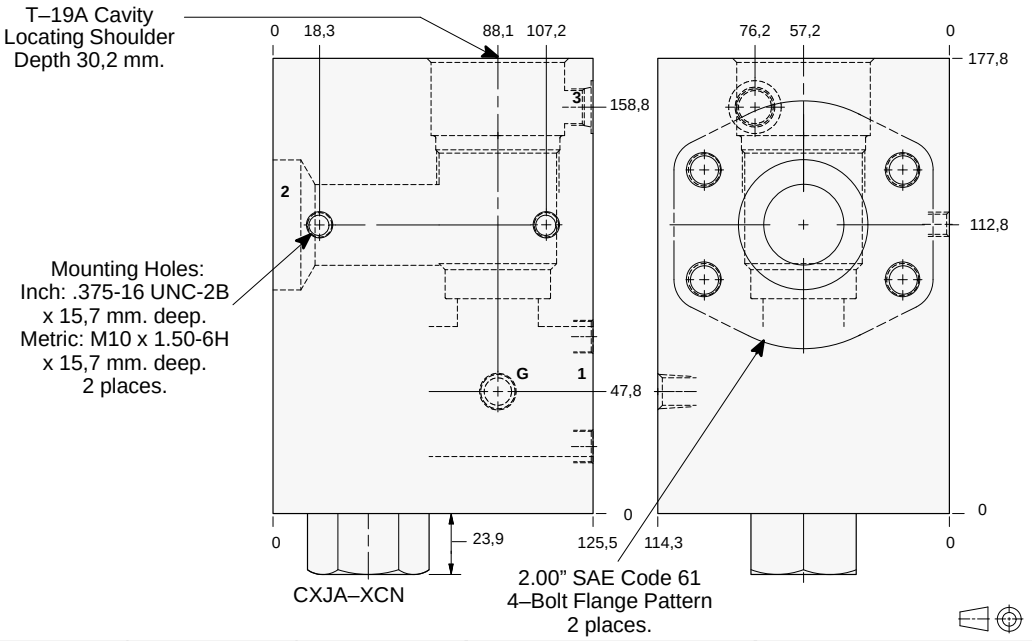

Mounting Hole Dimensions	Port 3	Gauge Port	ALUMINIUM		SG IRON	
			Model Code	List Price	Model Code	List Price
Inch	SAE-6	.25 NPTF	**K6S**		**K6S/S**	
Metric	.25 BSPP	.25 BSPP	**K6S/M**		**K6S/T**	

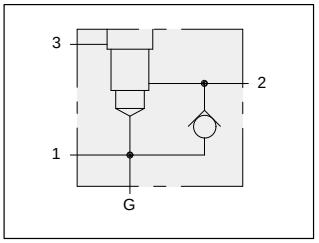

TYPICAL CARTRIDGES USED WITH THIS BODY

RVIA	- ***	Page	1.19
RSJC	- ***	Page	2.07
SQJB	- ***	Page	2.09
RSJE	- ***	Page	2.11

Cartridge seal type determines check valve seal type.

Instructions for ordering complete cartridge and body assemblies. Page viii

Pressure ratings, material specifications. Page 11.02

SAE Specifications. Page 11.03

2.00” SAE Code 62 flange port body with reverse free flow check and gauge port.

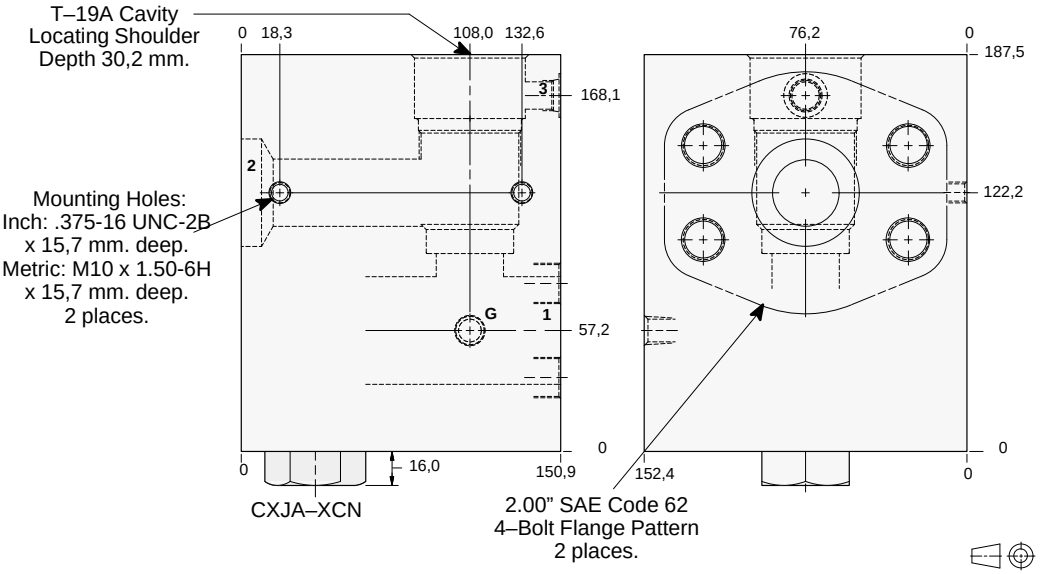

Mounting Hole Dimensions	Port 3	Gauge Port	ALUMINIUM		SG IRON	
			Model Code	List Price	Model Code	List Price
Inch	SAE-6	.25 NPTF	**K68**		**K68/S**	
Metric	.25 BSPP	.25 BSPP	**K68/M**		**K68/T**	

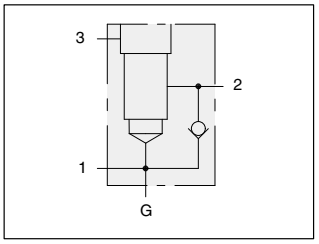

Body with reverse free flow check and gauge port for reducing applications.

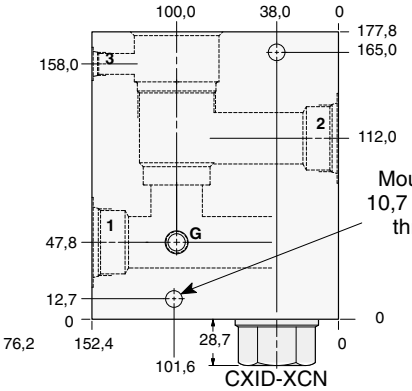

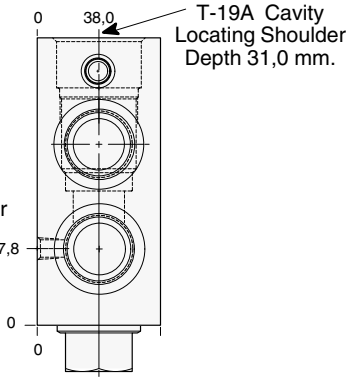

TYPICAL CARTRIDGES USED WITH THIS BODY

PPJB - *** Page 3.11
PPJC - *** Page 3.13

Cartridge seal type determines check valve seal type.

Instructions for ordering complete cartridge and body assemblies. Page viii

Pressure ratings, material specifications. Page 11.02

Ports 1 & 2	*Port 3*	*Gauge Port*	ALUMINIUM		SG IRON	
			Model Code	*List Price*	*Model Code*	*List Price*
.75 NPTF	.25 NPTF	.25 NPTF	**K2D**		**K2D/S**	
1.00 NPTF	.25 NPTF	.25 NPTF	**K2E**		**K2E/S**	
1.25 NPTF	.25 NPTF	.25 NPTF	**K2F**		**K2F/S**	
SAE-12	SAE-6	.25 NPTF	**K2L**		**K2L/S**	
SAE-16	SAE-6	.25 NPTF	**K2M**		**K2M/S**	
SAE-20	SAE-6	.25 NPTF	**K2N**		**K2N/S**	
.75 BSPP	.25 BSPP	.25 BSPP	**K2W**		**K2W/S**	
1.00 BSPP	.25 BSPP	.25 BSPP	**K2X**		**K2X/S**	
1.25 BSPP	.25 BSPP	.25 BSPP	**K2Y**		**K2Y/S**	

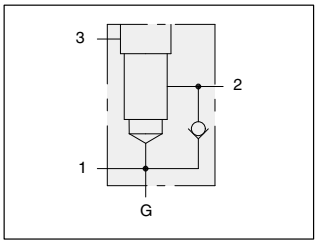

Body with high capacity port 3 reverse free flow check and gauge port for reducing/relieving applications.

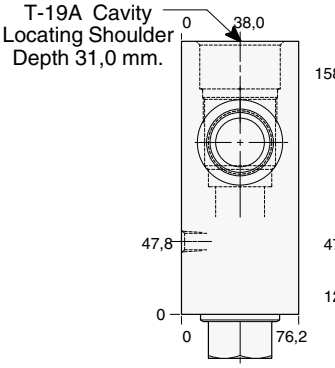

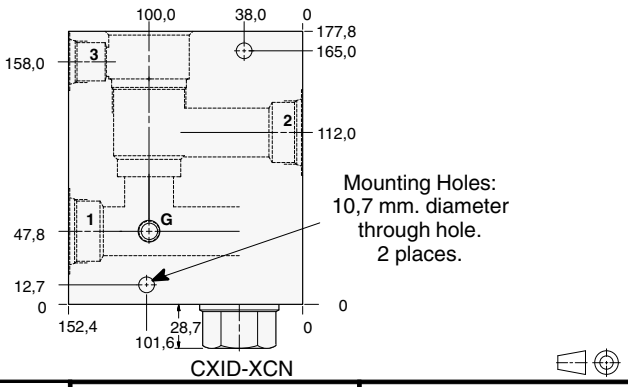

TYPICAL CARTRIDGES USED WITH THIS BODY

PPJB - *** Page 3.11
PPJC - *** Page 3.13

Cartridge seal type determines check valve seal type.

Instructions for ordering complete cartridge and body assemblies. Page viii

Pressure ratings, material specifications. Page 11.02

Ports 1 & 2	*Port 3*	*Gauge Port*	ALUMINIUM		SG IRON	
			Model Code	*List Price*	*Model Code*	*List Price*
.75 NPTF	.75 NPTF	.25 NPTF	**K4D**		**K4D/S**	
1.00 NPTF	.75 NPTF	.25 NPTF	**K4E**		**K4E/S**	
1.25 NPTF	.75 NPTF	.25 NPTF	**K4F**		**K4F/S**	
SAE-12	SAE-12	.25 NPTF	**K4L**		**K4L/S**	
SAE-16	SAE-12	.25 NPTF	**K4M**		**K4M/S**	
SAE-20	SAE-12	.25 NPTF	**K4N**		**K4N/S**	
.75 BSPP	.75 BSPP	.25 BSPP	**K4W**		**K4W/S**	
1.00 BSPP	.75 BSPP	.25 BSPP	**K4X**		**K4X/S**	
1.25 BSPP	.75 BSPP	.25 BSPP	**K4Y**		**K4Y/S**	

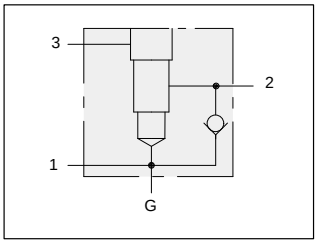

1.25” SAE Code 61 flange port body with reverse free flow check and gauge port for reducing applications.

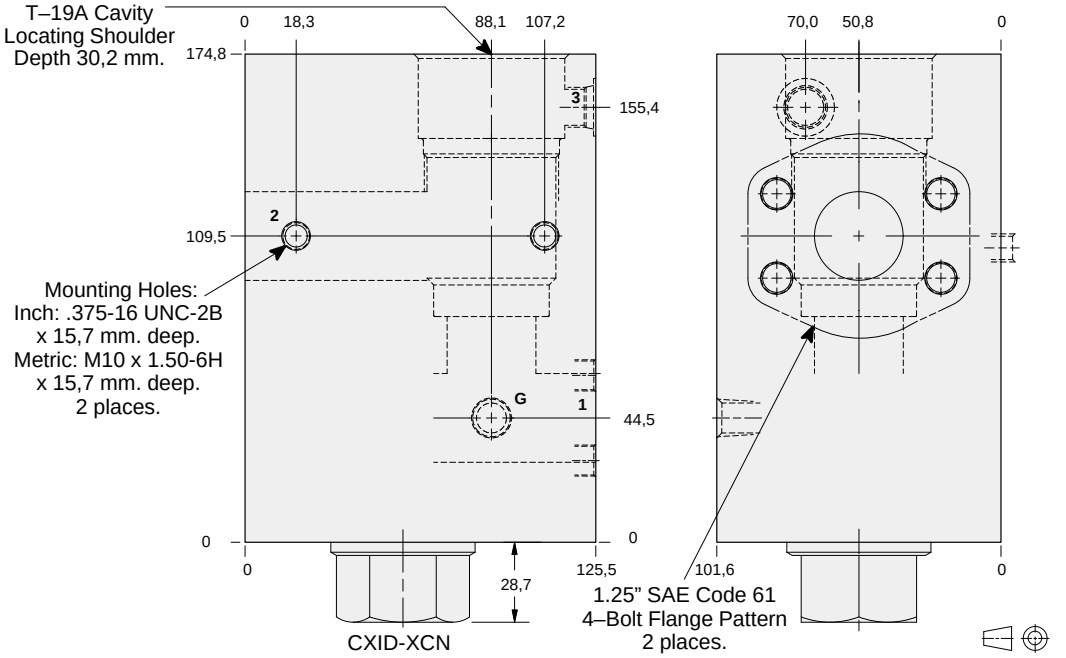

Mounting Hole Dimensions	*Port 3*	*Gauge Port*	ALUMINIUM		SG IRON	
			Model Code	*List Price*	*Model Code*	*List Price*
Inch	SAE-6	.25 NPTF	**K2Q**		**K2Q/S**	
Metric	.25 BSPP	.25 BSPP	**K2Q/M**		**K2Q/T**	

TYPICAL CARTRIDGES USED WITH THIS BODY

PBJB - *** Page 3.07
PBJC - *** Page 3.09

Cartridge seal type determines check valve seal type.

Instructions for ordering complete cartridge and body assemblies. Page viii

Pressure ratings, material specifications. Page 11.02

SAE Specifications. Page 11.03

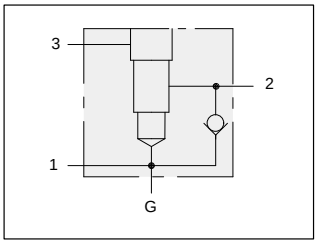

1.25” SAE Code 62 flange port body with reverse free flow check and gauge port for reducing applications.

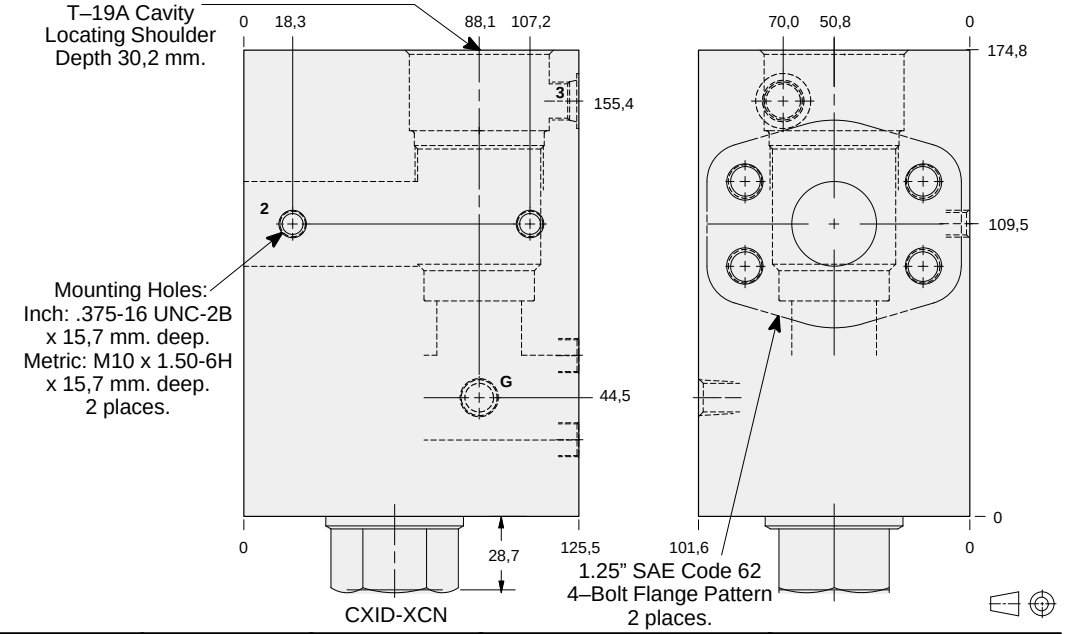

Mounting Hole Dimensions	*Port 3*	*Gauge Port*	ALUMINIUM		SG IRON	
			Model Code	*List Price*	*Model Code*	*List Price*
Inch	SAE-6	.25 NPTF	**K25**		**K25/S**	
Metric	.25 BSPP	.25 BSPP	**K25/M**		**K25/T**	

TYPICAL CARTRIDGES USED WITH THIS BODY

PBJB - *** Page 3.07
PBJC - *** Page 3.09

Cartridge seal type determines check valve seal type.

Instructions for ordering complete cartridge and body assemblies. Page viii

Pressure ratings, material specifications. Page 11.02

SAE Specifications. Page 11.03

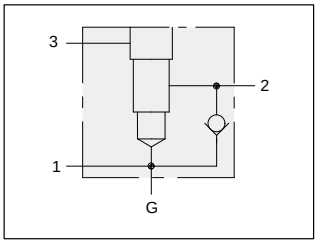

TYPICAL CARTRIDGES USED WITH THIS BODY

PBJB - *** Page 3.07
PBJC - *** Page 3.09

Cartridge seal type determines check valve seal type.

Instructions for ordering complete cartridge and body assemblies. Page viii

Pressure ratings, material specifications. Page 11.02

SAE Specifications. Page 11.03

1.50” SAE Code 61 flange port body with reverse free flow check and gauge port for reducing applications.

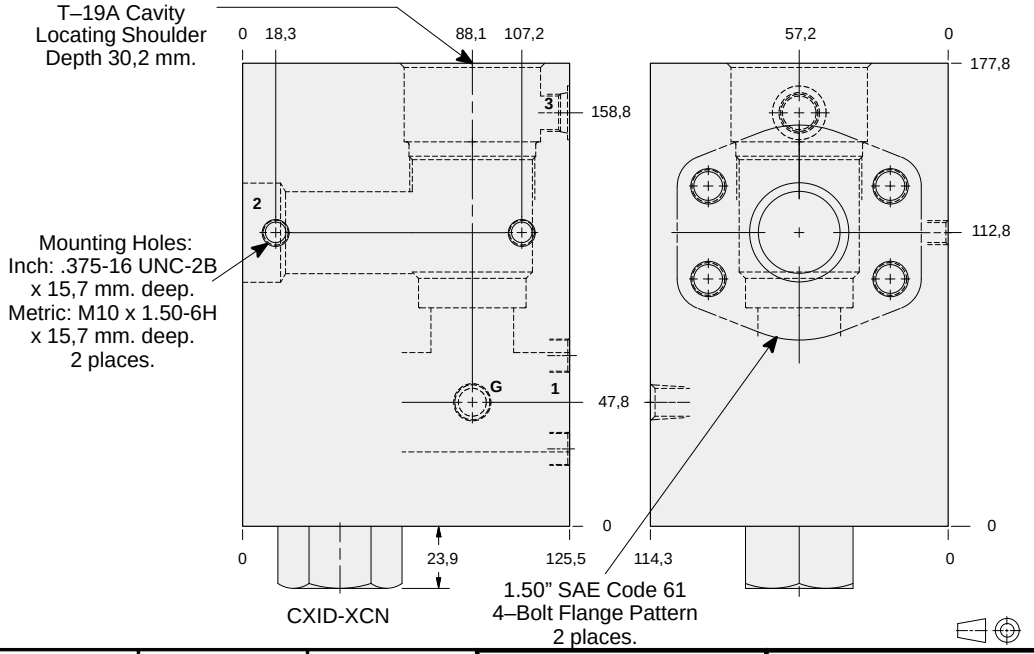

Mounting Hole Dimensions	Port 3	Gauge Port	ALUMINIUM		SG IRON	
			Model Code	List Price	Model Code	List Price
Inch	SAE-6	.25 NPTF	**K2R**		**K2R/S**	
Metric	.25 BSPP	.25 BSPP	**K2R/M**		**K2R/T**	

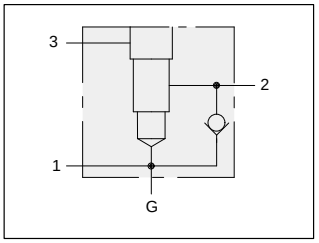

TYPICAL CARTRIDGES USED WITH THIS BODY

PBJB - *** Page 3.07
PBJC - *** Page 3.09

Cartridge seal type determines check valve seal type.

Instructions for ordering complete cartridge and body assemblies. Page viii

Pressure ratings, material specifications. Page 11.02

SAE Specifications. Page 11.03

1.50” SAE Code 62 flange port body with reverse free flow check and gauge port for reducing applications.

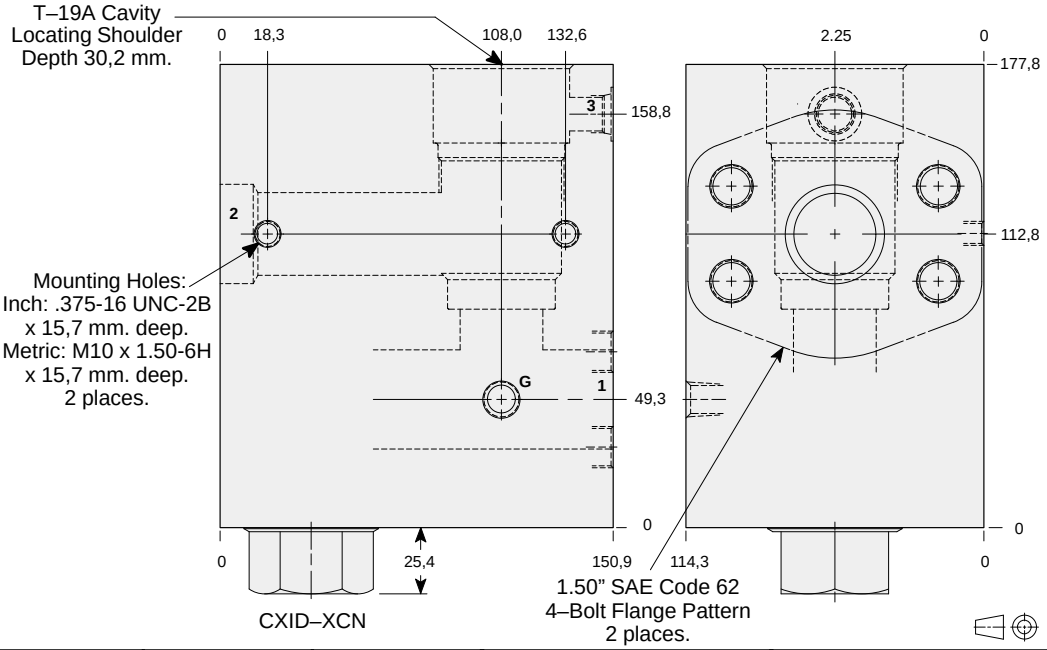

Mounting Hole Dimensions	Port 3	Gauge Port	ALUMINIUM		SG IRON	
			Model Code	List Price	Model Code	List Price
Inch	SAE-6	.25 NPTF	**K26**		**K26/S**	
Metric	.25 BSPP	.25 BSPP	**K26/M**		**K26/T**	

LINE MOUNT BODIES

- Aluminium rated to 210 bar and SG Iron rated to 350 bar.

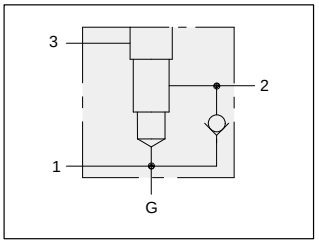

1.50” SAE Code 61 flange port body with high capacity port 3 reverse free flow check and gauge port for reducing/relieving applications.

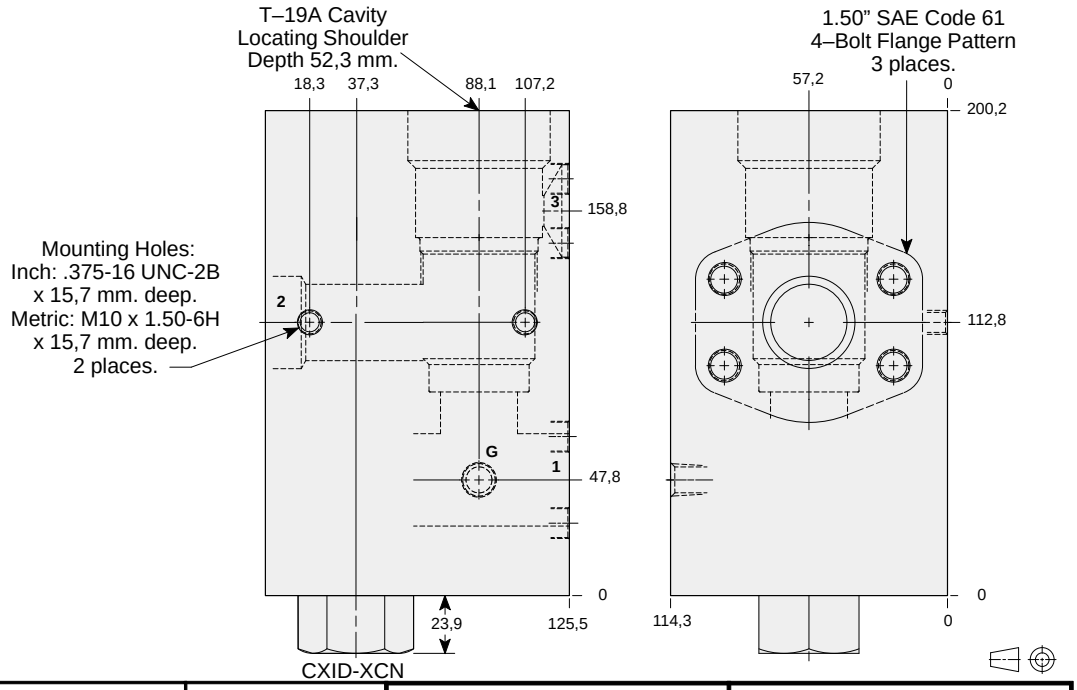

TYPICAL CARTRIDGES USED WITH THIS BODY

PPJB - *** Page 3.11
PPJC - *** Page 3.13

Cartridge seal type determines check valve seal type.

Instructions for ordering complete cartridge and body assemblies. Page viii

Pressure ratings, material specifications. Page 11.02

SAE Specifications. Page 11.03

Mounting Hole Dimensions	*Gauge Port*	ALUMINIUM		SG IRON	
		Model Code	*List Price*	*Model Code*	*List Price*
Inch	.25 NPTF	**K4R**		**K4R/S**	
Metric	.25 BSPP	**K4R/M**		**K4R/T**	

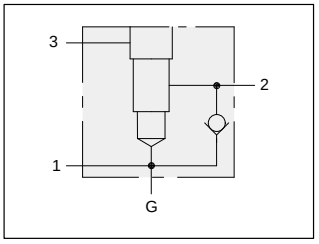

1.50” SAE Code 62 flange port body with high capacity port 3 reverse free flow check and gauge port for reducing/relieving applications.

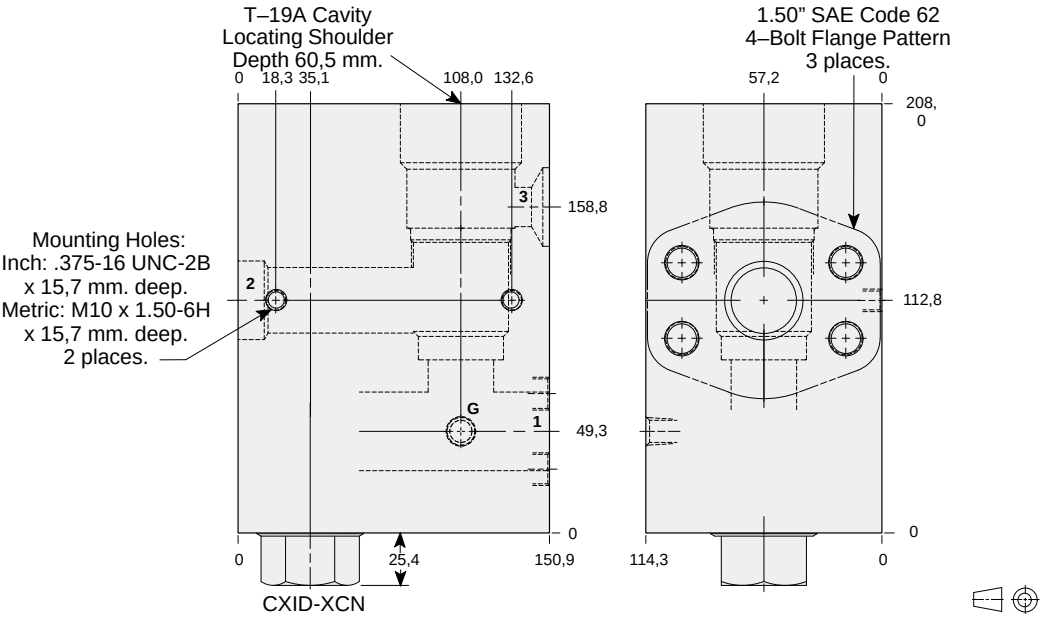

TYPICAL CARTRIDGES USED WITH THIS BODY

PPJB - *** Page 3.11
PPJC - *** Page 3.13

Cartridge seal type determines check valve seal type.

Instructions for ordering complete cartridge and body assemblies. Page viii

Pressure ratings, material specifications. Page 11.02

SAE Specifications. Page 11.03

Mounting Hole Dimensions	*Gauge Port*	ALUMINIUM		SG IRON	
		Model Code	*List Price*	*Model Code*	*List Price*
Inch	.25 NPTF	**K46**		**K46/S**	
Metric	.25 BSPP	**K46/M**		**K46/T**	

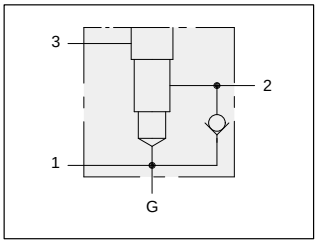

TYPICAL CARTRIDGES USED WITH THIS BODY

PPJB - *** Page 3.11
PPJC - *** Page 3.13

Cartridge seal type determines check valve seal type.

Instructions for ordering complete cartridge and body assemblies. Page viii

Pressure ratings, material specifications. Page 11.02

SAE Specifications. Page 11.03

2.00” SAE Code 61 flange port body with high capacity port 3 reverse free flow check and gauge port for reducing/relieving applications.

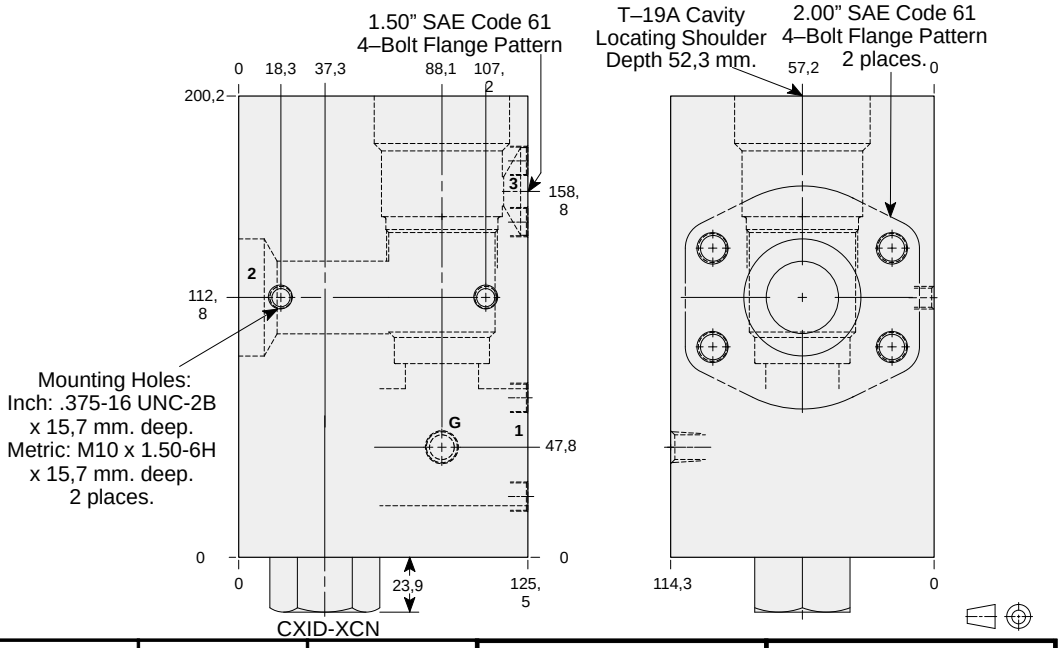

Mounting Hole Dimensions	*Port 3 SAE Code 61*	*Gauge Port*	ALUMINIUM		SG IRON	
			Model Code	*List Price*	*Model Code*	*List Price*
Inch	1.50”	.25 NPTF	**K4S**		**K4S/S**	
Metric	1.50”	.25 BSPP	**K4S/M**		**K4S/T**	

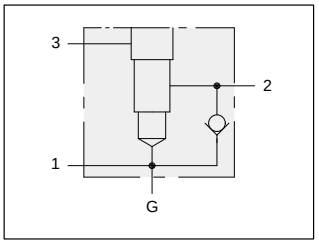

TYPICAL CARTRIDGES USED WITH THIS BODY

PPJB - *** Page 3.11
PPJC - *** Page 3.13

Cartridge seal type determines check valve seal type.

Instructions for ordering complete cartridge and body assemblies. Page viii

Pressure ratings, material specifications. Page 11.02

SAE Specifications. Page 11.03

2.00” SAE Code 62 flange port body with high capacity port 3 reverse free flow check and gauge port for reducing/relieving applications.

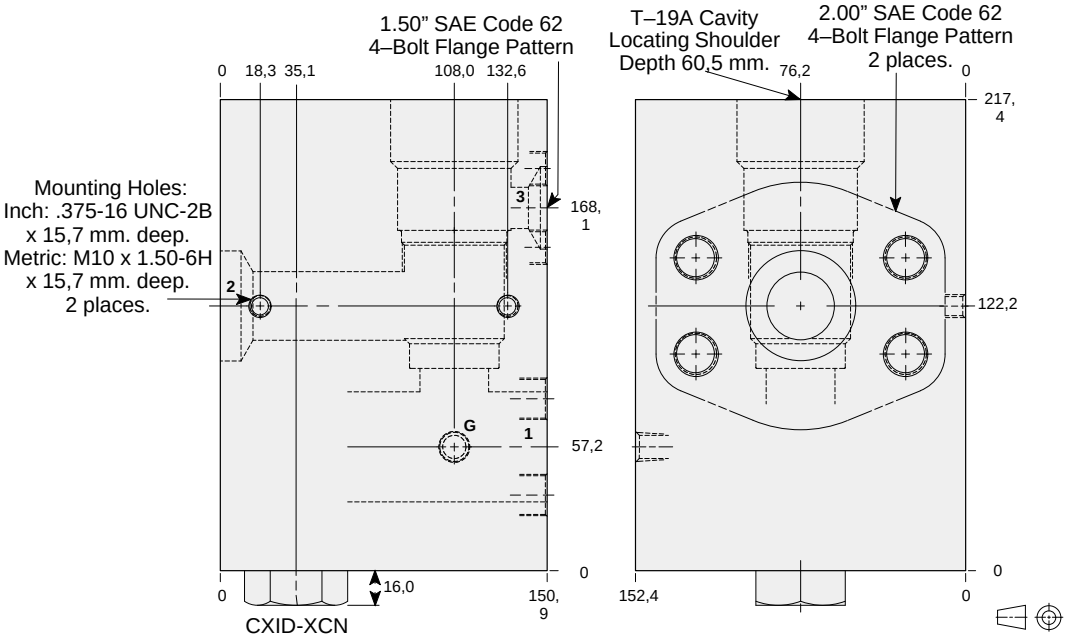

Mounting Hole Dimensions	*Port 3 SAE Code 62*	*Gauge Port*	ALUMINIUM		SG IRON	
			Model Code	*List Price*	*Model Code*	*List Price*
Inch	1.50”	.25 NPTF	**K48**		**K48/S**	
Metric	1.50”	.25 BSPP	**K48/M**		**K48/T**	

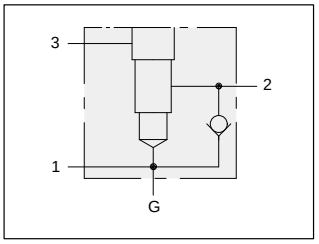

TYPICAL CARTRIDGES USED WITH THIS BODY

PBJB - *** Page 3.07
PBJC - *** Page 3.09

Cartridge seal type determines check valve seal type.

Instructions for ordering complete cartridge and body assemblies. Page viii

Pressure ratings, material specifications. Page 11.02

SAE Specifications. Page 11.03

2.00” SAE Code 61 flange port body with reverse free flow check and gauge port for reducing applications.

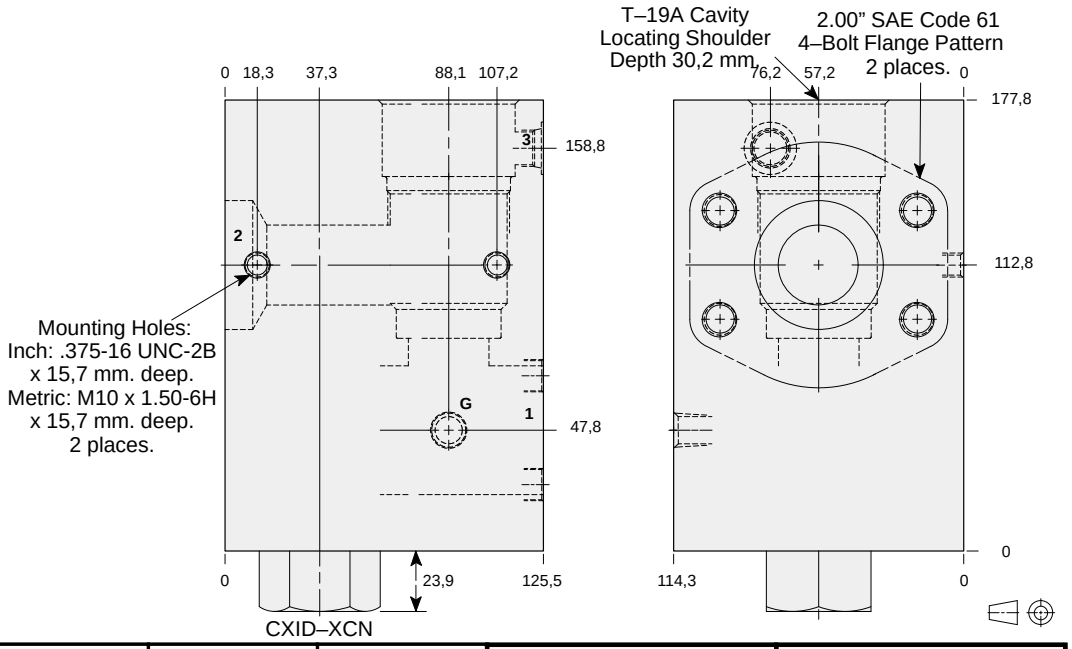

Mounting Hole Dimensions	*Port 3*	*Gauge Port*	ALUMINIUM		SG IRON	
			Model Code	*List Price*	*Model Code*	*List Price*
Inch	SAE-6	.25 NPTF	**K2S**		**K2S/S**	
Metric	.25 BSPP	.25 BSPP	**K2S/M**		**K2S/T**	

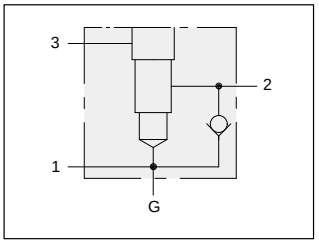

TYPICAL CARTRIDGES USED WITH THIS BODY

PBJB - *** Page 3.07
PBJC - *** Page 3.09

Cartridge seal type determines check valve seal type.

Instructions for ordering complete cartridge and body assemblies. Page viii

Pressure ratings, material specifications. Page 11.02

SAE Specifications. Page 11.03

2.00” SAE Code 62 flange port body with reverse free flow check and gauge port for reducing applications.

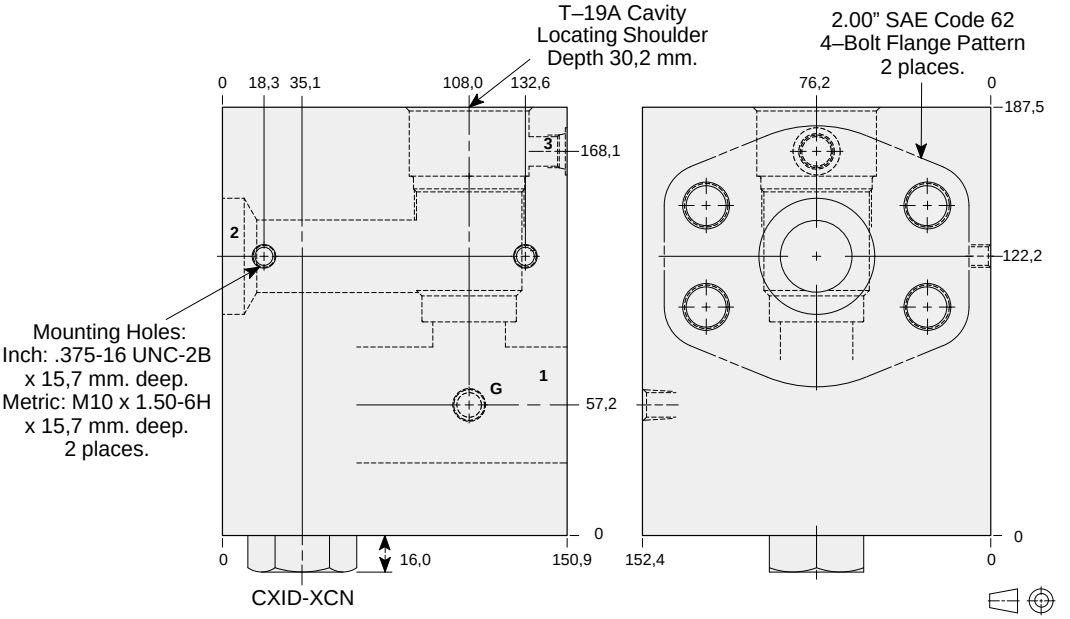

Mounting Hole Dimensions	*Port 3*	*Gauge Port*	ALUMINIUM		SG IRON	
			Model Code	*List Price*	*Model Code*	*List Price*
Inch	SAE-6	.25 NPTF	**K28**		**K28/S**	
Metric	.25 BSPP	.25 BSPP	**K28/M**		**K28/T**	

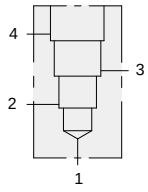

TYPICAL CARTRIDGES USED WITH THIS BODY

RVID	- ***	Page	1.21
CWIA	- ***	Page	4.19
CWIG	- ***	Page	4.21
CVIV	- ***	Page	4.23

Instructions for ordering complete cartridge and body assemblies. Page viii

Pressure ratings, material specifications. Page 11.02

90 degree body.

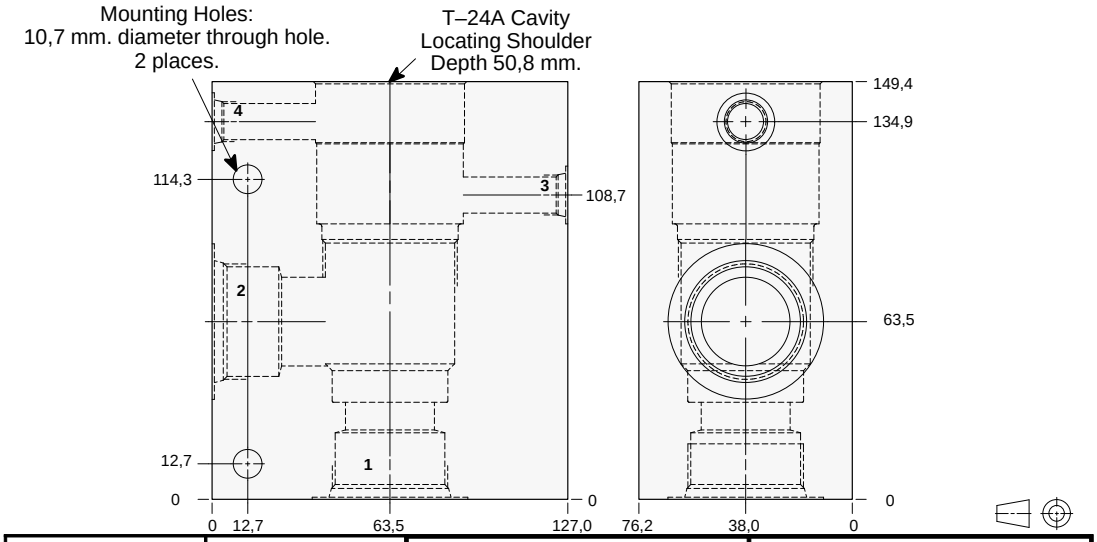

Ports 1 & 2	*Ports 3 & 4*	ALUMINIUM		SG IRON	
		Model Code	*List Price*	*Model Code*	*List Price*
1.00 NPTF	.25 NPTF	**QCE**		**QCE/S**	
1.25 NPTF	.25 NPTF	**QCF**		**QCF/S**	
SAE-16	SAE-6	**QCM**		**QCM/S**	
SAE-20	SAE-6	**QCN**		**QCN/S**	
1.00 BSPP	.25 BSPP	**QCX**		**QCX/S**	
1.25 BSPP	.25 BSPP	**QCY**		**QCY/S**	

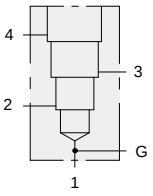

TYPICAL CARTRIDGES USED WITH THIS BODY

PVJA	- ***	Page	3.15
PVJB	- ***	Page	3.17
FVFA	- ***	Page	6.05

Instructions for ordering complete cartridge and body assemblies. Page viii

Pressure ratings, material specifications. Page 11.02

90 degree body with high capacity port 3 and gauge port.

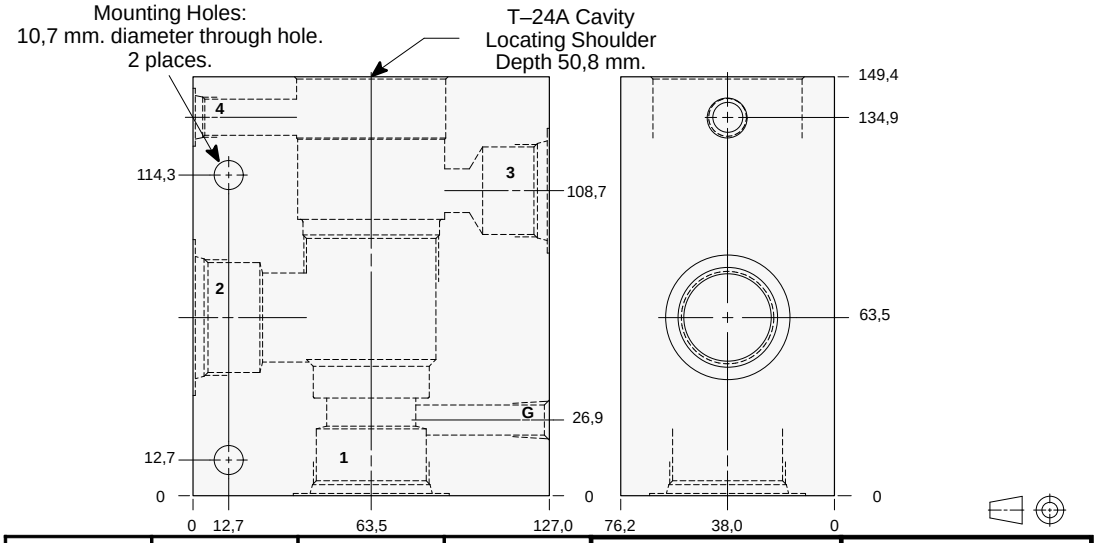

Ports 1 & 2	*Port 3*	*Port 4*	*Gauge Port*	ALUMINIUM		SG IRON	
				Model Code	*List Price*	*Model Code*	*List Price*
1.00 NPTF	1.00 NPTF	.25 NPTF	.25 NPTF	**QAE**		**QAE/S**	
1.25 NPTF	1.00 NPTF	.25 NPTF	.25 NPTF	**QAF**		**QAF/S**	
SAE-16	SAE-16	SAE-6	.25 NPTF	**QAM**		**QAM/S**	
SAE-20	SAE-16	SAE-6	.25 NPTF	**QAN**		**QAN/S**	
1.00 BSPP	1.00 BSPP	.25 BSPP	.25 BSPP	**QAX**		**QAX/S**	
1.25 BSPP	1.00 BSPP	.25 BSPP	.25 BSPP	**QAY**		**QAY/S**	

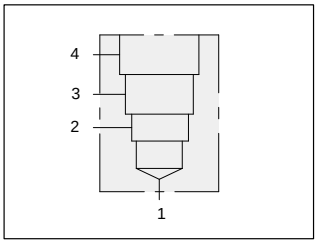

90 degree 1.25” SAE Code 61 flange port body.

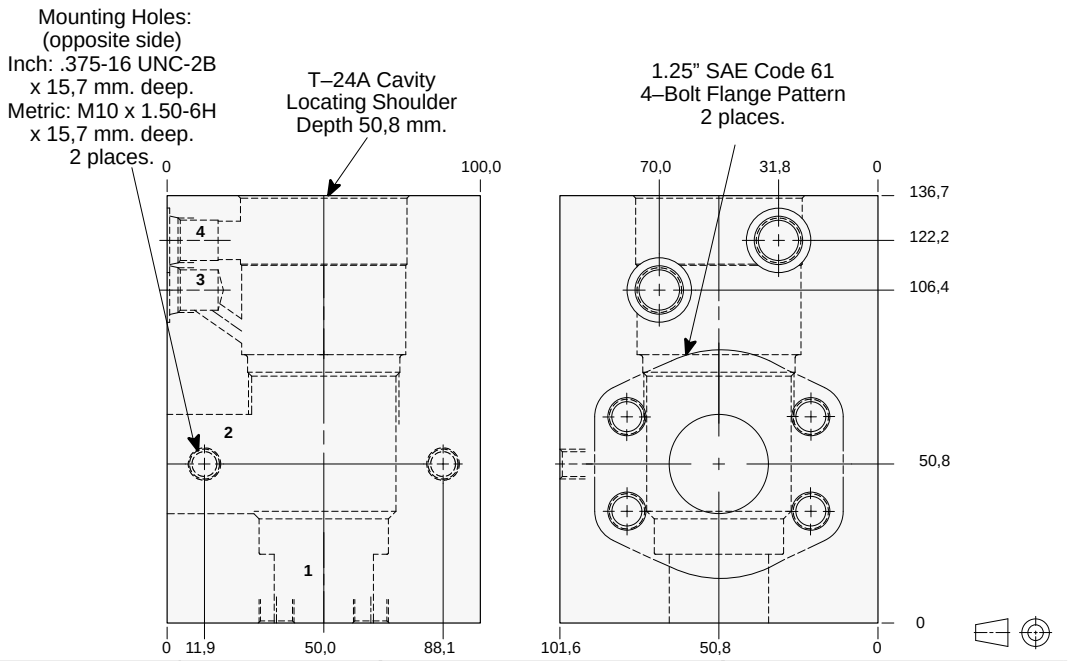

TYPICAL CARTRIDGES USED WITH THIS BODY

RVID	- ***	Page	1.21
CWIA	- ***	Page	4.19
CWIG	- ***	Page	4.21
CVIV	- ***	Page	4.23

Instructions for ordering complete cartridge and body assemblies. Page viii

Pressure ratings, material specifications. Page 11.02

SAE Specifications. Page 11.03

Mounting Hole Dimensions	*Ports 3 & 4*	ALUMINIUM		SG IRON	
		Model Code	*List Price*	*Model Code*	*List Price*
Inch	SAE-6	**QCQ**		**QCQ/S**	
Metric	.25 BSPP	**QCQ/M**		**QCQ/T**	

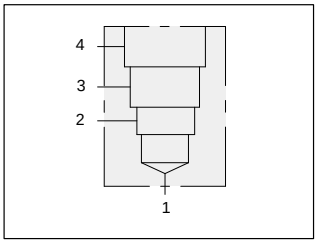

90 degree 1.25” SAE Code 62 flange port body.

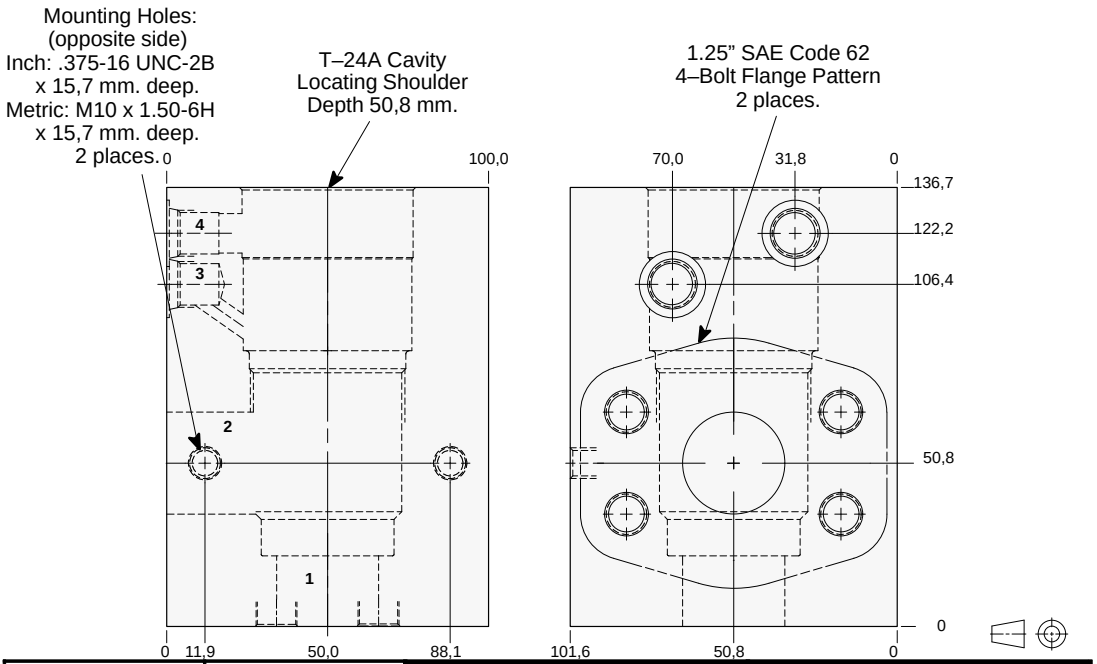

TYPICAL CARTRIDGES USED WITH THIS BODY

RVID	- ***	Page	1.21
CWIA	- ***	Page	4.19
CWIG	- ***	Page	4.21
CVIV	- ***	Page	4.23

Instructions for ordering complete cartridge and body assemblies. Page viii

Pressure ratings, material specifications. Page 11.02

SAE Specifications. Page 11.03

Mounting Hole Dimensions	*Ports 3 & 4*	ALUMINIUM		SG IRON	
		Model Code	*List Price*	*Model Code*	*List Price*
Inch	SAE-6	**QC5**		**QC5/S**	
Metric	.25 BSPP	**QC5/M**		**QC5/T**	

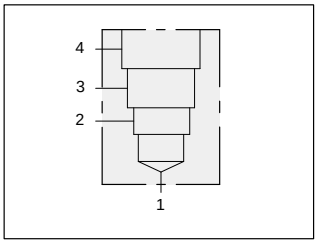

90 degree 1.50” SAE Code 61 flange port body.

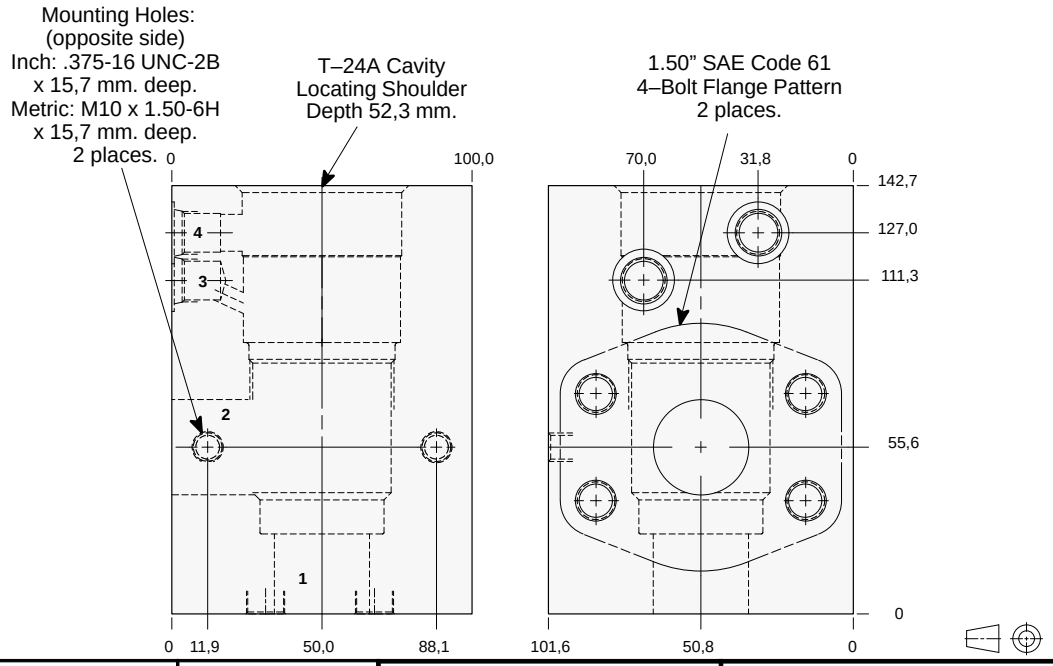

Mounting Hole Dimensions	*Ports 3 & 4*	**ALUMINIUM**		**SG IRON**	
		Model Code	*List Price*	*Model Code*	*List Price*
Inch	SAE-6	**QCR**		**QCR/S**	
Metric	.25 BSPP	**QCR/M**		**QCR/T**	

TYPICAL CARTRIDGES USED WITH THIS BODY

RVID	- ***	Page	1.21
CWIA	- ***	Page	4.19
CWIG	- ***	Page	4.21
CVIV	- ***	Page	4.23

Instructions for ordering complete cartridge and body assemblies.	Page	viii
Pressure ratings, material specifications.	Page	11.02
SAE Specifications.	Page	11.03

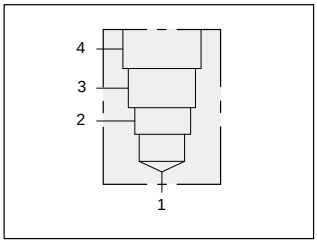

90 degree 1.50” SAE Code 62 flange port body.

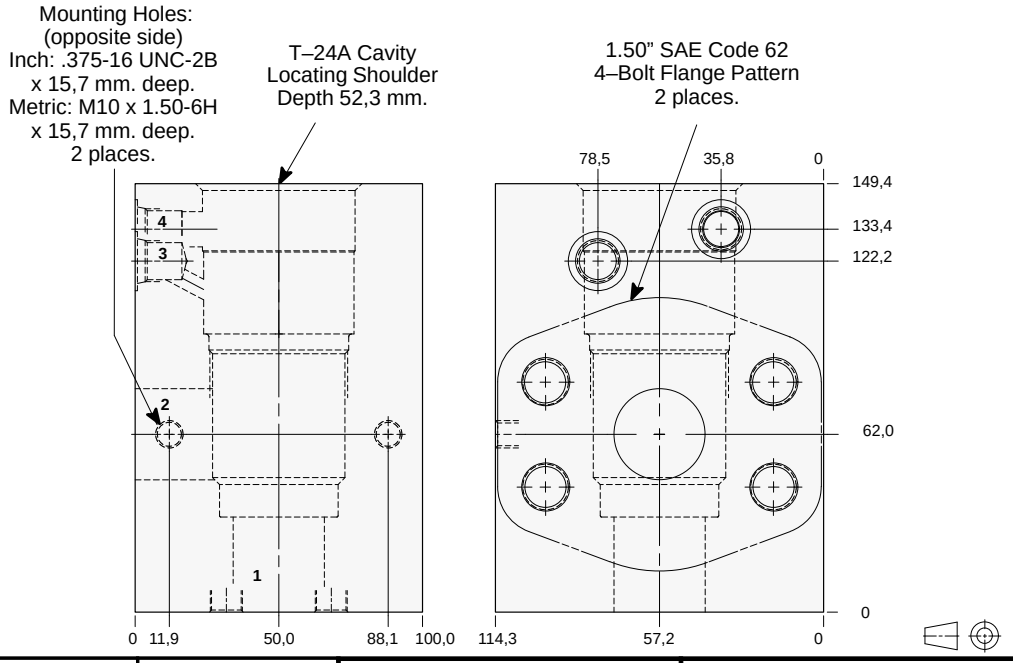

Mounting Hole Dimensions	*Ports 3 & 4*	**ALUMINIUM**		**SG IRON**	
		Model Code	*List Price*	*Model Code*	*List Price*
Inch	SAE-6	**QC6**		**QC6/S**	
Metric	.25 BSPP	**QC6/M**		**QC6/T**	

TYPICAL CARTRIDGES USED WITH THIS BODY

RVID	- ***	Page	1.21
CWIA	- ***	Page	4.19
CWIG	- ***	Page	4.21
CVIV	- ***	Page	4.23

Instructions for ordering complete cartridge and body assemblies.	Page	viii
Pressure ratings, material specifications.	Page	11.02
SAE Specifications.	Page	11.03

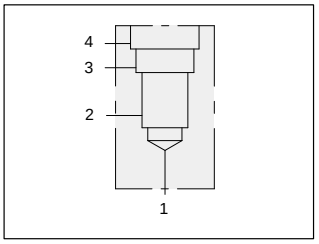

90 degree 2.00” SAE Code 61 flange port body.

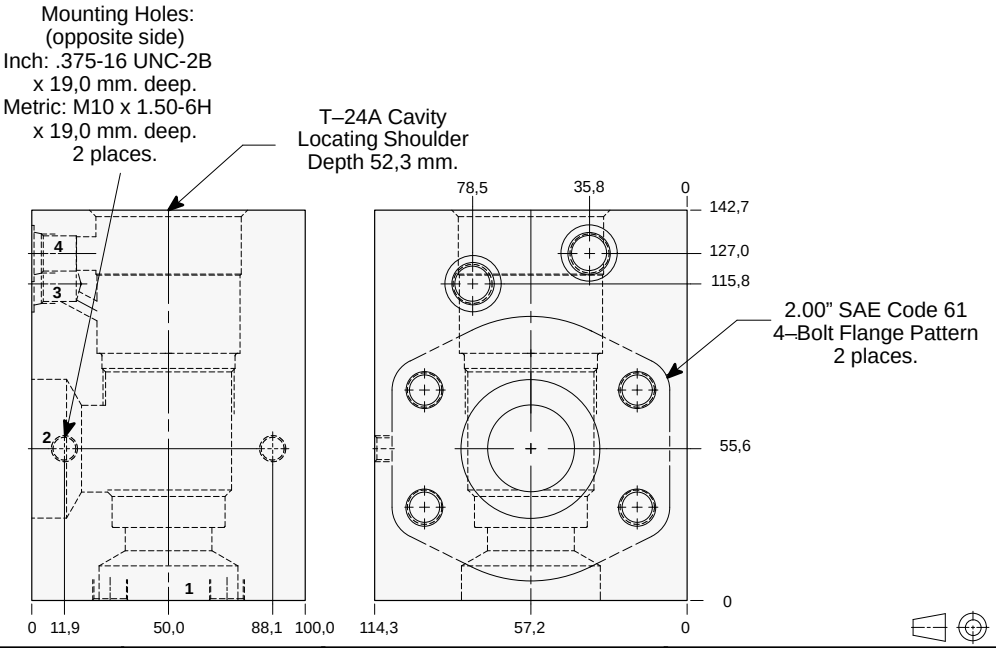

TYPICAL CARTRIDGES USED WITH THIS BODY

RVID	- ***	Page	1.21
CWIA	- ***	Page	4.19
CWIG	- ***	Page	4.21
CVIV	- ***	Page	4.23

Instructions for ordering complete cartridge and body assemblies. Page viii

Pressure ratings, material specifications. Page 11.02

SAE Specifications. Page 11.03

Mounting Hole Dimensions	*Ports 3 & 4*	ALUMINIUM		SG IRON	
		Model Code	*List Price*	*Model Code*	*List Price*
Inch	SAE-6	**QCS**		**QCS/S**	
Metric	.25 BSPP	**QCS/M**		**QCS/T**	

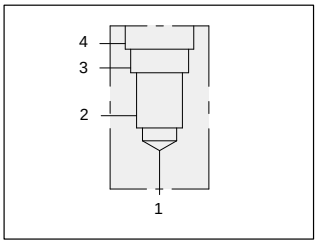

90 degree 2.00” SAE Code 62 flange port body.

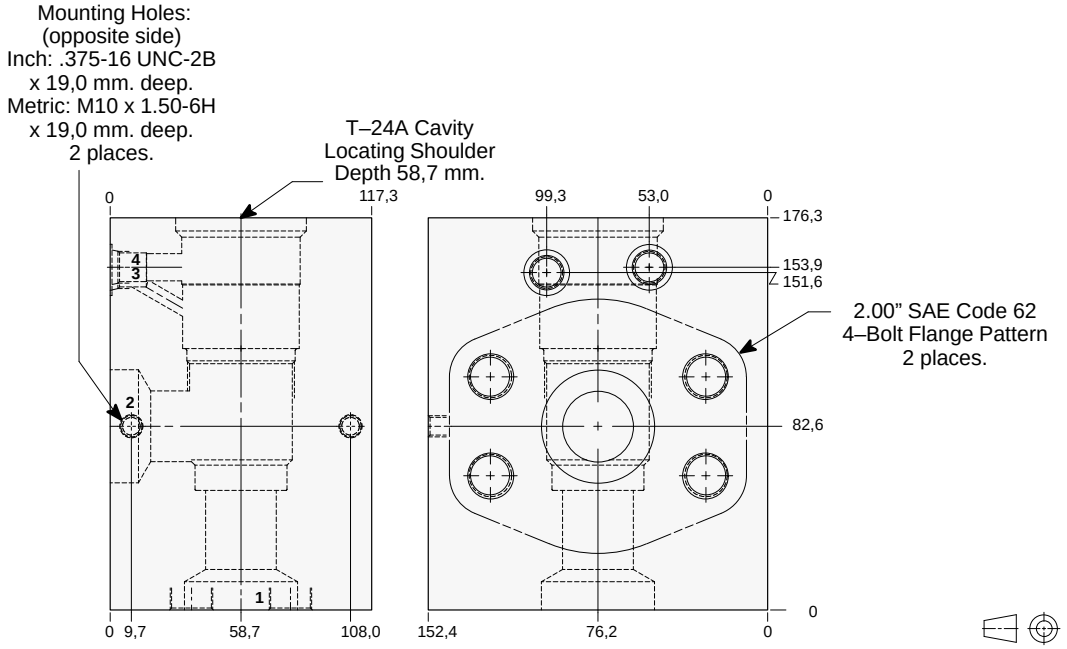

TYPICAL CARTRIDGES USED WITH THIS BODY

RVID	- ***	Page	1.21
CWIA	- ***	Page	4.19
CWIG	- ***	Page	4.21
CVIV	- ***	Page	4.23

Instructions for ordering complete cartridge and body assemblies. Page viii

Pressure ratings, material specifications. Page 11.02

SAE Specifications. Page 11.03

Mounting Hole Dimensions	*Ports 3 & 4*	ALUMINIUM		SG IRON	
		Model Code	*List Price*	*Model Code*	*List Price*
Inch	SAE-6	**QC8**		**QC8/S**	
Metric	.25 BSPP	**QC8/M**		**QC8/T**	

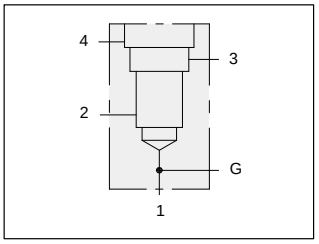

90 degree 1.25” SAE Code 61 high capacity flange port body with gauge port.

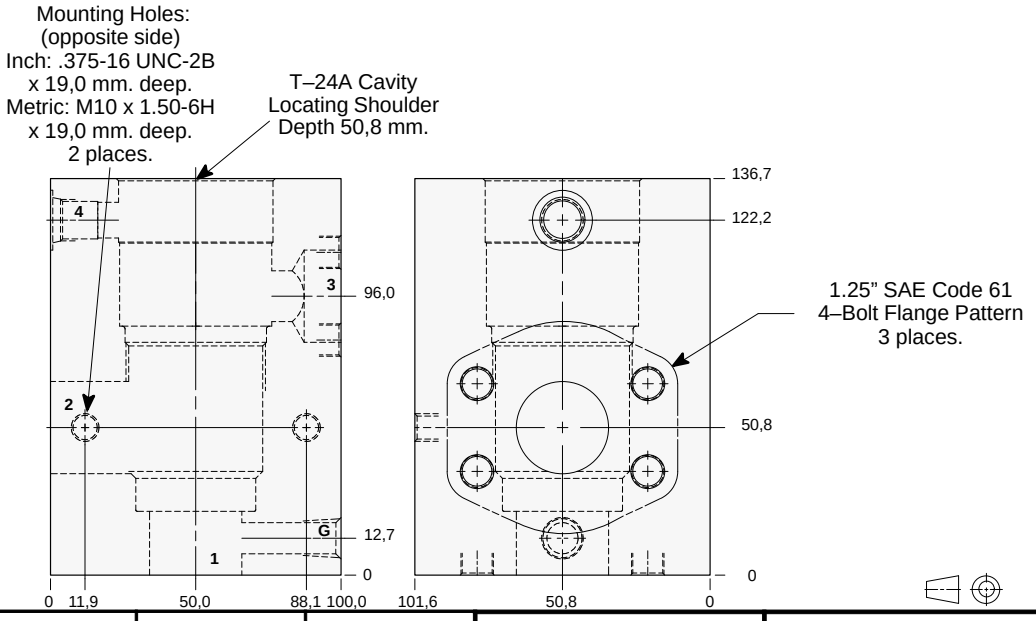

TYPICAL CARTRIDGES USED WITH THIS BODY

PVJA - *** Page 3.15
PVJB - *** Page 3.17
FVFA - *** Page 6.05

Instructions for ordering complete cartridge and body assemblies. Page viii

Pressure ratings, material specifications. Page 11.02

SAE Specifications. Page 11.03

Mounting Hole Dimensions	*Port 4*	*Gauge Port*	ALUMINIUM		SG IRON	
			Model Code	*List Price*	*Model Code*	*List Price*
Inch	SAE-6	.25 NPTF	**QAQ**		**QAQ/S**	
Metric	.25 BSPP	.25 BSPP	**QAQ/M**		**QAQ/T**	

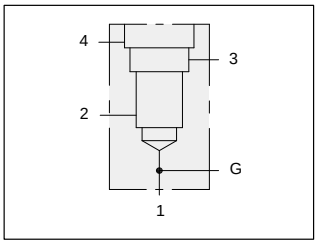

90 degree 1.25” SAE Code 62 high capacity flange port body with gauge port.

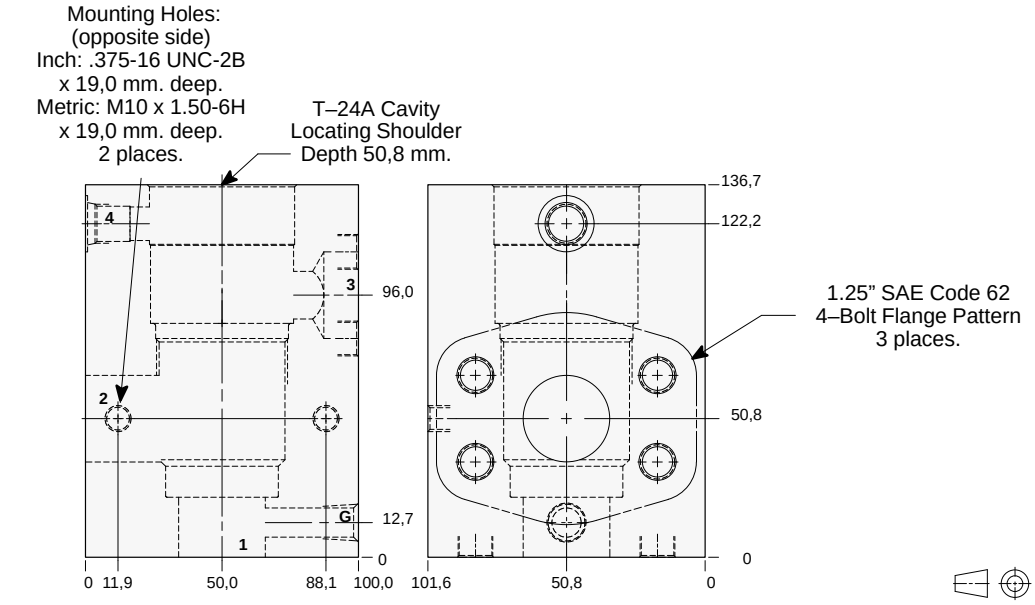

TYPICAL CARTRIDGES USED WITH THIS BODY

PVJA - *** Page 3.15
PVJB - *** Page 3.17
FVFA - *** Page 6.05

Instructions for ordering complete cartridge and body assemblies. Page viii

Pressure ratings, material specifications. Page 11.02

SAE Specifications. Page 11.03

Mounting Hole Dimensions	*Port 4*	*Gauge Port*	ALUMINIUM		SG IRON	
			Model Code	*List Price*	*Model Code*	*List Price*
Inch	SAE-6	.25 NPTF	**QA5**		**QA5/S**	
Metric	.25 BSPP	.25 BSPP	**QA5/M**		**QA5/T**	

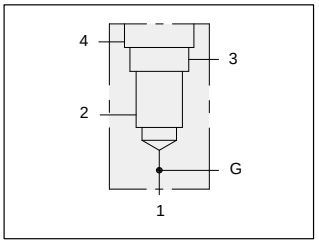

TYPICAL CARTRIDGES USED WITH THIS BODY

PVJA	- ***	Page	3.15
PVJB	- ***	Page	3.17
FVFA	- ***	Page	6.05

Instructions for ordering complete cartridge and body assemblies. Page viii

Pressure ratings, material specifications. Page 11.02

SAE Specifications. Page 11.03

90 degree 1.50” SAE Code 61 high capacity flange port body with gauge port.

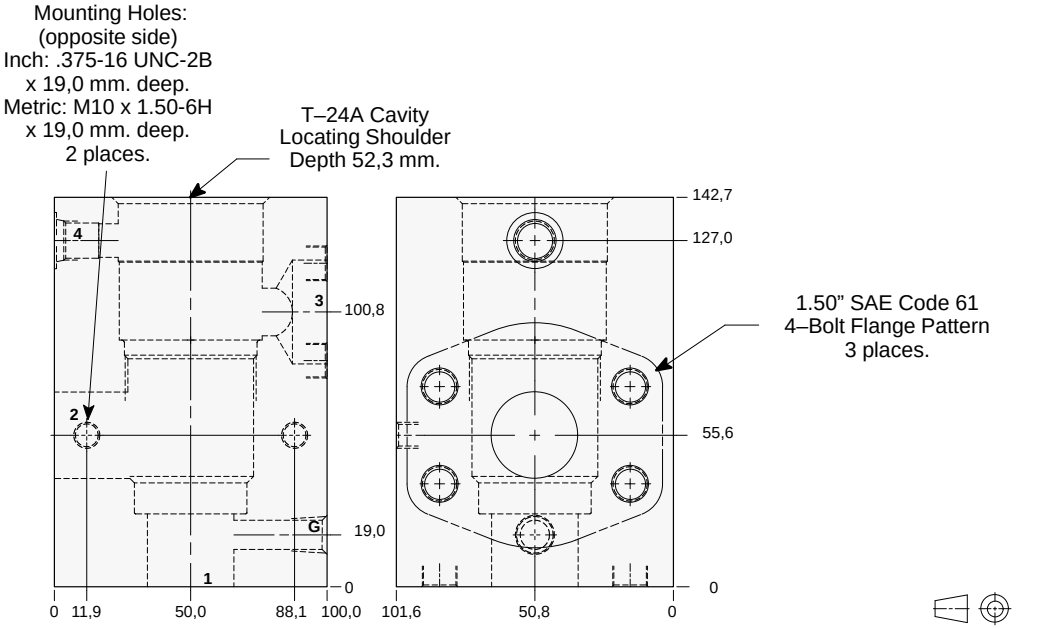

Mounting Hole Dimensions	*Port 4*	*Gauge Port*	ALUMINIUM		SG IRON	
			Model Code	*List Price*	*Model Code*	*List Price*
Inch	SAE-6	.25 NPTF	**QAR**		**QAR/S**	
Metric	.25 BSPP	.25 BSPP	**QAR/M**		**QAR/T**	

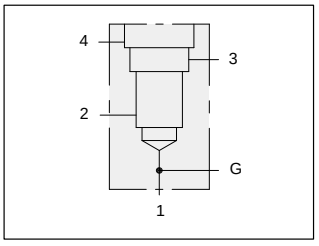

TYPICAL CARTRIDGES USED WITH THIS BODY

PVJA	- ***	Page	3.15
PVJB	- ***	Page	3.17
FVFA	- ***	Page	6.05

Instructions for ordering complete cartridge and body assemblies. Page viii

Pressure ratings, material specifications. Page 11.02

SAE Specifications. Page 11.03

90 degree 1.50” SAE Code 62 high capacity flange port body with gauge port.

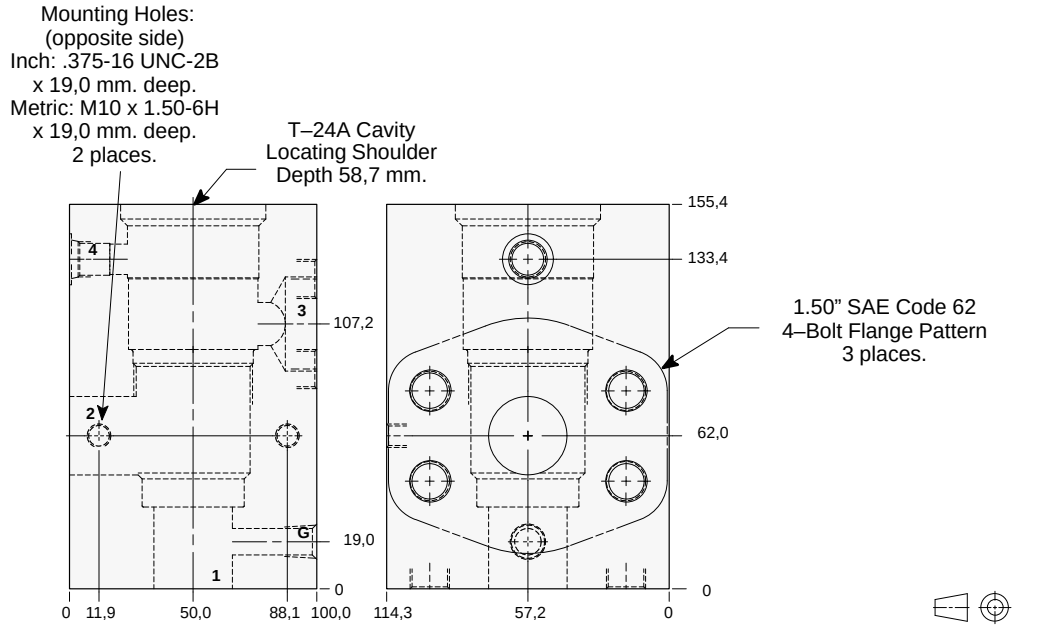

Mounting Hole Dimensions	*Port 4*	*Gauge Port*	ALUMINIUM		SG IRON	
			Model Code	*List Price*	*Model Code*	*List Price*
Inch	SAE-6	.25 NPTF	**QA6**		**QA6/S**	
Metric	.25 BSPP	.25 BSPP	**QA6/M**		**QA6/T**	

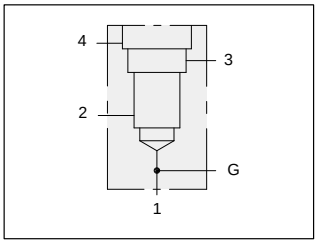

90 degree 2.00” SAE Code 61 high capacity flange port body with gauge port.

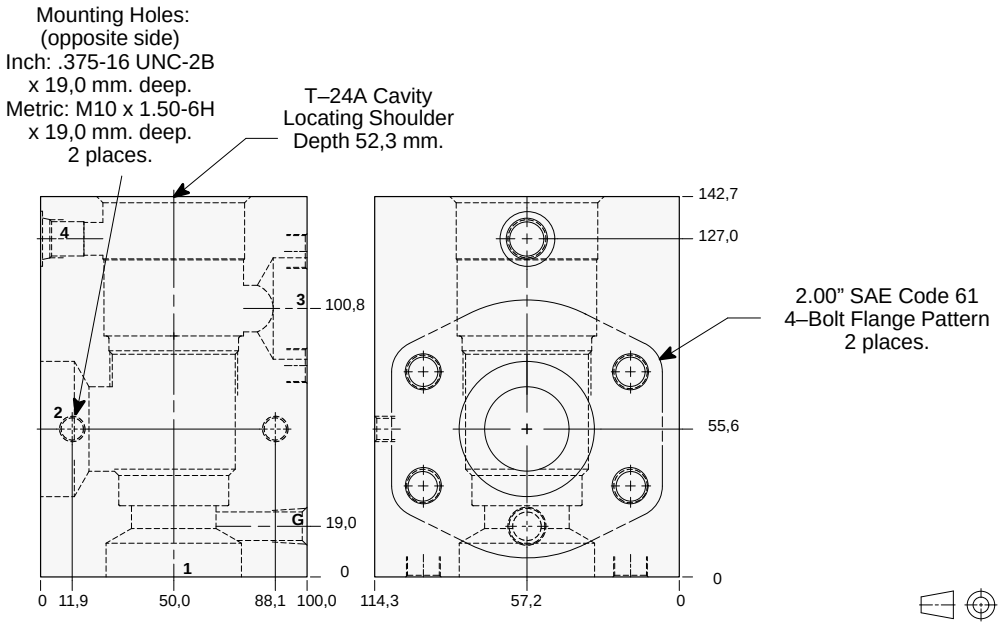

TYPICAL CARTRIDGES USED WITH THIS BODY

PVJA	- ***	Page	3.15
PVJB	- ***	Page	3.17
FVFA	- ***	Page	6.05

Instructions for ordering complete cartridge and body assemblies.	Page	viii
Pressure ratings, material specifications.	Page	11.02
SAE Specifications.	Page	11.03

Mounting Hole Dimensions	*Port 3 SAE Code 61*	*Port 4*	*Gauge Port*	ALUMINIUM		SG IRON	
				Model Code	*List Price*	*Model Code*	*List Price*
Inch	1.50”	SAE-6	.25 NPTF	**QAS**		**QAS/S**	
Metric	1.50”	.25 BSPP	.25 BSPP	**QAS/M**		**QAS/T**	

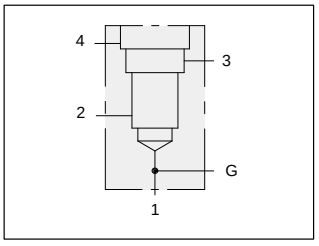

90 degree 2.00” SAE Code 62 high capacity flange port body with gauge port.

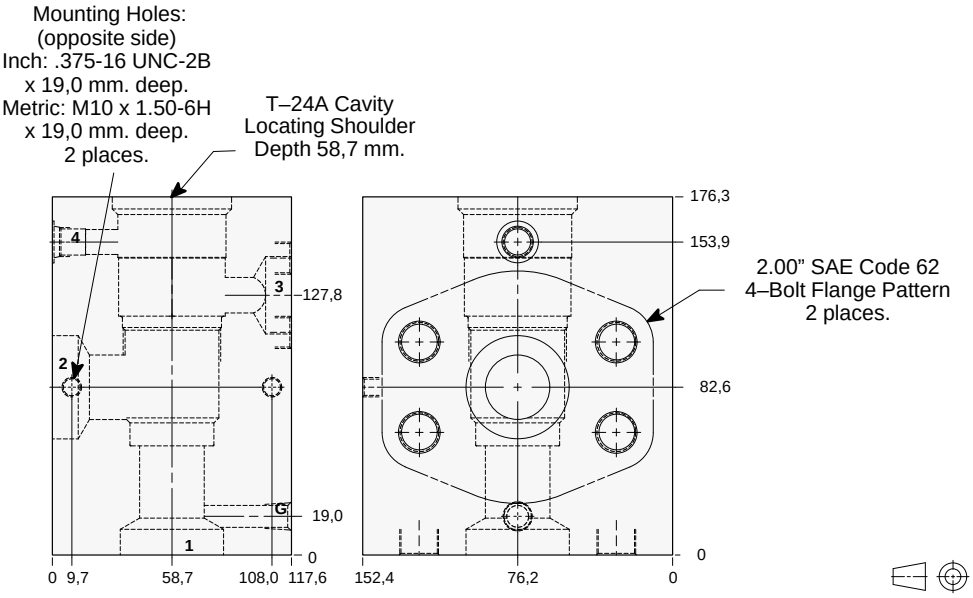

TYPICAL CARTRIDGES USED WITH THIS BODY

PVJA	- ***	Page	3.15
PVJB	- ***	Page	3.17
FVFA	- ***	Page	6.05

Instructions for ordering complete cartridge and body assemblies.	Page	viii
Pressure ratings, material specifications.	Page	11.02
SAE Specifications.	Page	11.03

Mounting Hole Dimensions	*Port 3 SAE Code 62*	*Port 4*	*Gauge Port*	ALUMINIUM		SG IRON	
				Model Code	*List Price*	*Model Code*	*List Price*
Inch	1.50”	SAE-6	.25 NPTF	**QA8**		**QA8/S**	
Metric	1.50”	.25 BSPP	.25 BSPP	**QA8/M**		**QA8/T**	

LINE MOUNT BODIES

- Aluminium rated to 210 bar and SG Iron rated to 350 bar.

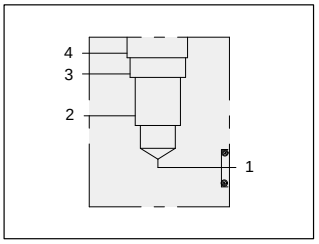

Direct mount 1.00” SAE Code 62 body.

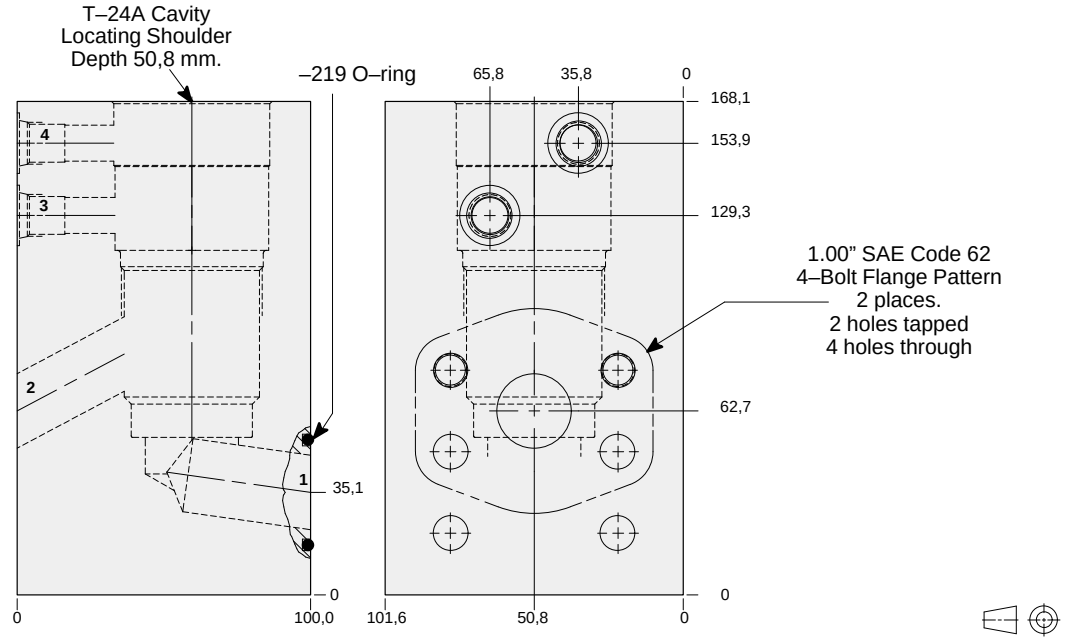

TYPICAL CARTRIDGES USED WITH THIS BODY

RVID	- ***	Page	1.21
CWIA	- ***	Page	4.19
CWIG	- ***	Page	4.21
CVIV	- ***	Page	4.23

Cartridge seal type determines O–ring type.

Instructions for ordering complete cartridge and body assemblies. Page viii

Pressure ratings, material specifications. Page 11.02

SAE Specifications. Page 11.03

Mounting Hole Dimensions	*Ports 3 & 4*	ALUMINIUM		SG IRON	
		Model Code	*List Price*	*Model Code*	*List Price*
Inch	SAE-6	**WGY**		**WGY/S**	
Metric	.25 BSPP	**WGY/M**		**WGY/T**	

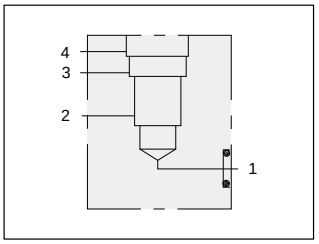

Direct mount 1.25” SAE Code 62 body

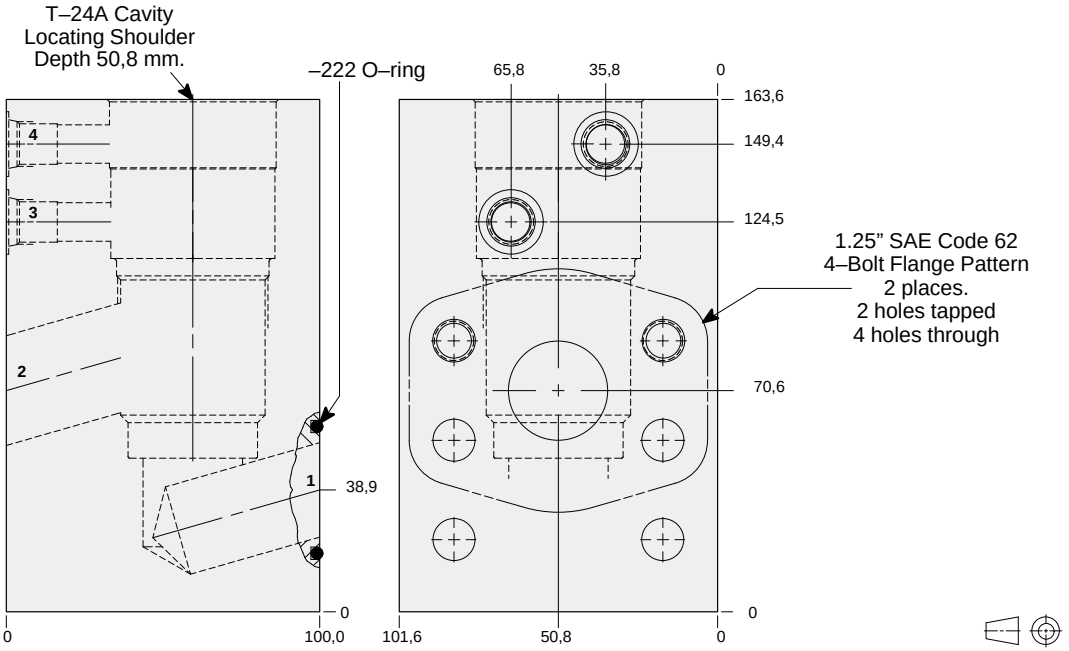

TYPICAL CARTRIDGES USED WITH THIS BODY

RVID	- ***	Page	1.21
CWIA	- ***	Page	4.19
CWIG	- ***	Page	4.21
CVIV	- ***	Page	4.23

Cartridge seal type determines O–ring type.

Instructions for ordering complete cartridge and body assemblies. Page viii

Pressure ratings, material specifications. Page 11.02

SAE Specifications. Page 11.03

Mounting Hole Dimensions	*Ports 3 & 4*	ALUMINIUM		SG IRON	
		Model Code	*List Price*	*Model Code*	*List Price*
Inch	SAE-6	**WGZ**		**WGZ/S**	
Metric	.25 BSPP	**WGZ/M**		**WGZ/T**	

- Aluminium rated to 210 bar and SG Iron rated to 350 bar.

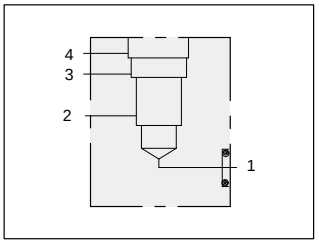

Direct mount 1.50” SAE Code 62 body.

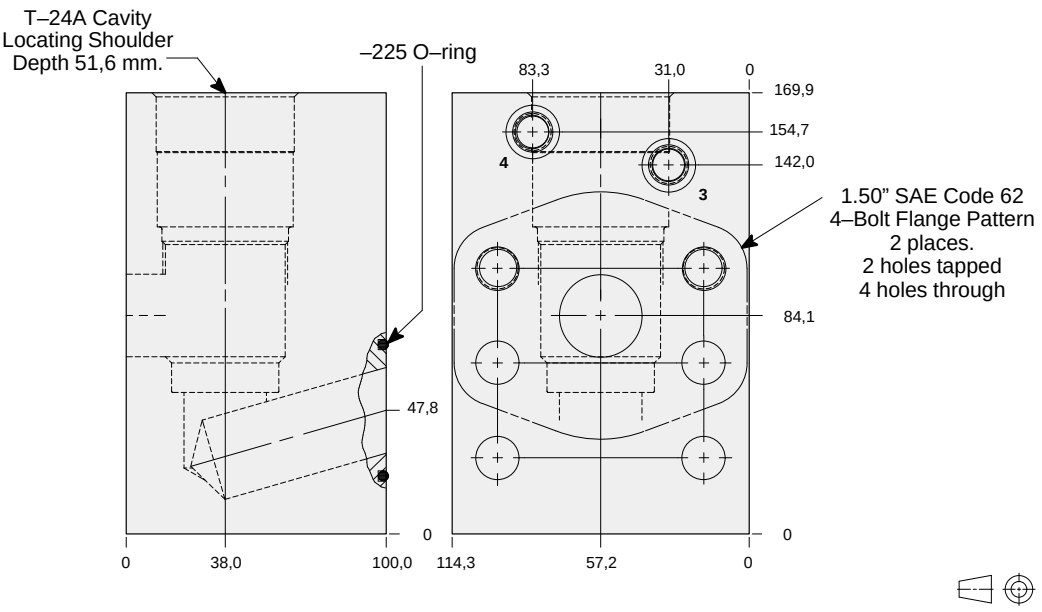

TYPICAL CARTRIDGES USED WITH THIS BODY

RVID	- ***	Page	1.21
CWIA	- ***	Page	4.19
CWIG	- ***	Page	4.21
CVIV	- ***	Page	4.23

Cartridge seal type determines O–ring type.

Instructions for ordering complete cartridge and body assemblies. Page viii

Pressure ratings, material specifications. Page 11.02

SAE Specifications. Page 11.03

Mounting Hole Dimensions	*Ports 3 & 4*	ALUMINIUM		SG IRON	
		Model Code	*List Price*	*Model Code*	*List Price*
Inch	SAE-6	**WGT**		**WGT/S**	
Metric	.25 BSPP	**WGT/M**		**WGT/T**	

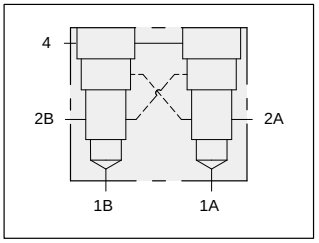

Two cavity cross–piloted body with common port 4 for load control applications.

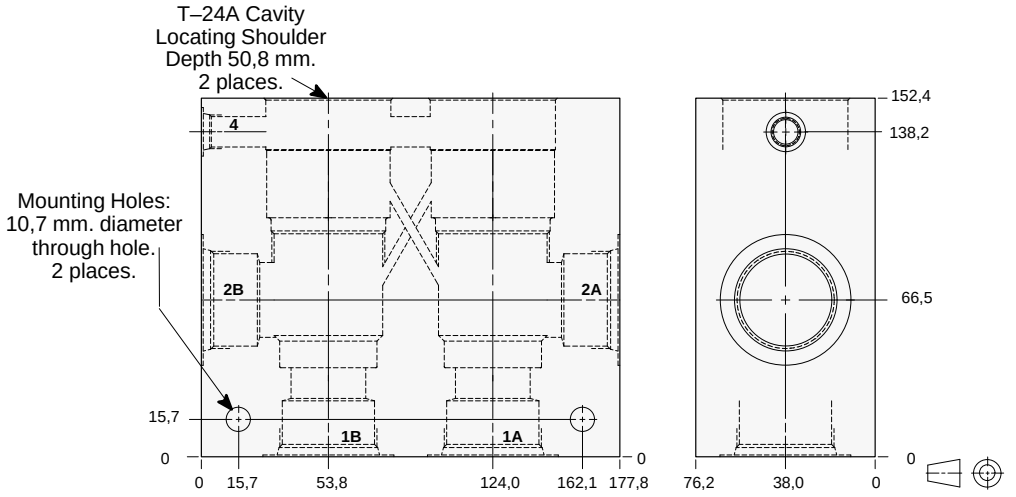

TYPICAL CARTRIDGES USED WITH THIS BODY

CWIA - *** Page 4.19
CWIG - *** Page 4.21
CVIV - *** Page 4.23

Instructions for ordering complete cartridge and body assemblies. Page iii

Pressure ratings, material specifications. Page 11.02

Ports 1A, 1B, 2A, & 2B	*Ports 4A & 4B*	ALUMINIUM		SG IRON	
		Model Code	*List Price*	*Model Code*	*List Price*
1.00 NPTF	.25 NPTF	**XLE**		**XLE/S**	
1.25 NPTF	.25 NPTF	**XLF**		**XLF/S**	
SAE-16	SAE-6	**XLM**		**XLM/S**	
SAE-20	SAE-6	**XLN**		**XLN/S**	
1.00 BSPP	.25 BSPP	**XLX**		**XLX/S**	
1.25 BSPP	.25 BSPP	**XLY**		**XLY/S**	

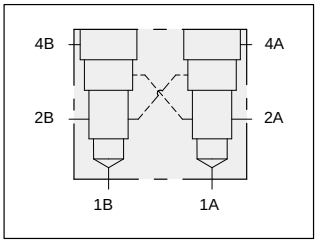

Two cavity cross–piloted body with independent port 4 for load control applications.

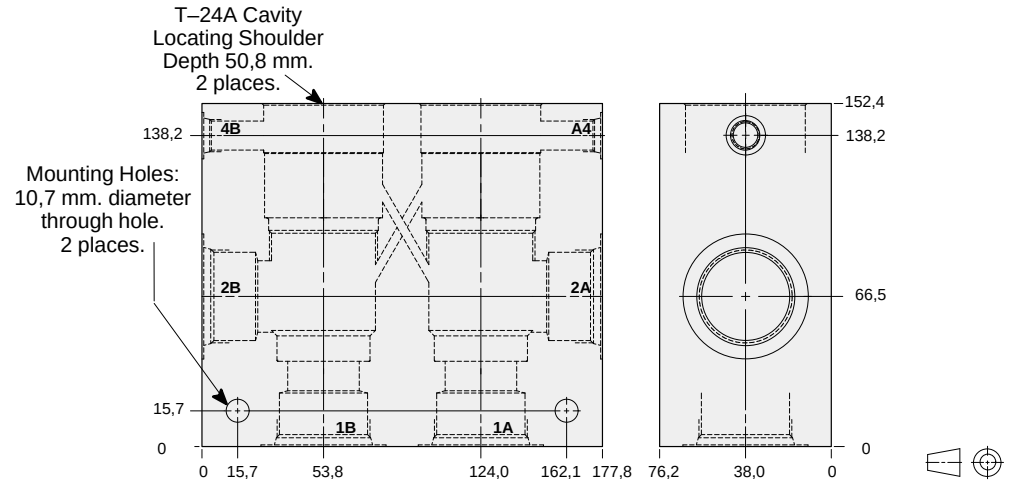

TYPICAL CARTRIDGES USED WITH THIS BODY

CWIA - *** Page 4.19
CWIG - *** Page 4.21
CVIV - *** Page 4.23

Instructions for ordering complete cartridge and body assemblies. Page iii

Pressure ratings, material specifications. Page 11.02

Ports 1A, 1B, 2A, & 2B	*Ports 4A & 4B*	ALUMINIUM		SG IRON	
		Model Code	*List Price*	*Model Code*	*List Price*
1.00 NPTF	.25 NPTF	**XSE**		**XSE/S**	
1.25 NPTF	.25 NPTF	**XSF**		**XSF/S**	
SAE-16	SAE-6	**XSM**		**XSM/S**	
SAE-20	SAE-6	**XSN**		**XSN/S**	
1.00 BSPP	.25 BSPP	**XSX**		**XSX/S**	
1.25 BSPP	.25 BSPP	**XSY**		**XSY/S**	

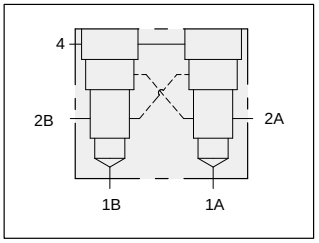

TYPICAL CARTRIDGES USED WITH THIS BODY

CWIA - *** Page 4.19
CWIG - *** Page 4.21
CVIV - *** Page 4.23

Instructions for ordering complete cartridge and body assemblies. Page iii

Pressure ratings, material specifications. Page 11.02

SAE Specifications. Page 11.03

Two cavity cross–piloted 1.50” SAE Code 61 flange port body with common port 4 for load control applications.

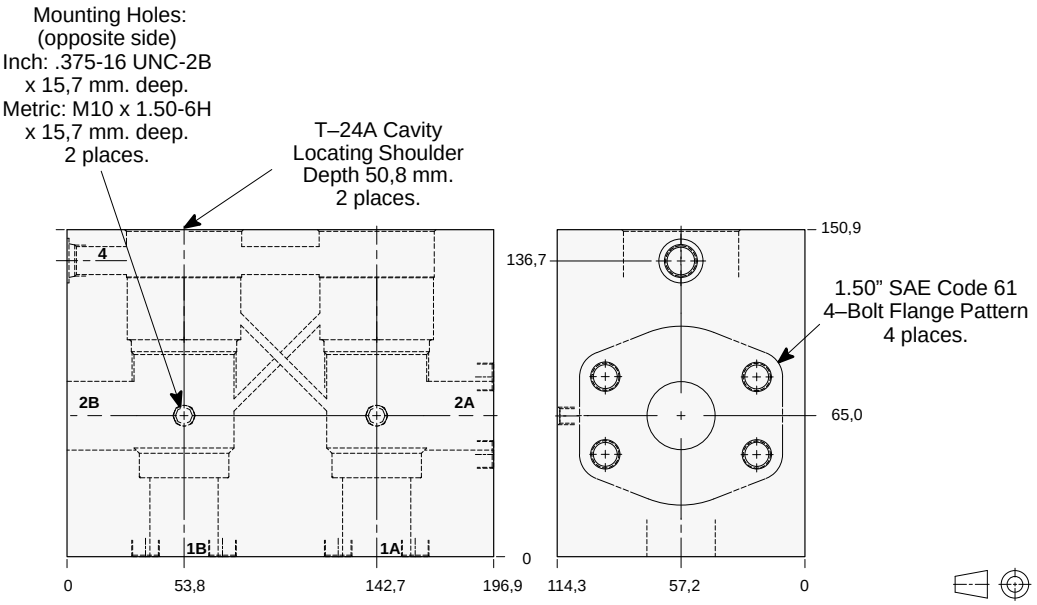

Mounting Hole Dimensions	*Port 4*	ALUMINIUM		SG IRON	
		Model Code	*List Price*	*Model Code*	*List Price*
Inch	SAE-6	**XLR**		**XLR/S**	
Metric	.25 BSPP	**XLR/M**		**XLR/T**	

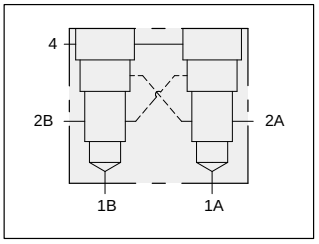

TYPICAL CARTRIDGES USED WITH THIS BODY

CWIA - *** Page 4.19
CWIG - *** Page 4.21
CVIV - *** Page 4.23

Instructions for ordering complete cartridge and body assemblies. Page iii

Pressure ratings, material specifications. Page 11.02

SAE Specifications. Page 11.03

Two cavity cross–piloted 1.50” SAE Code 62 flange port body with common port 4 for load control applications.

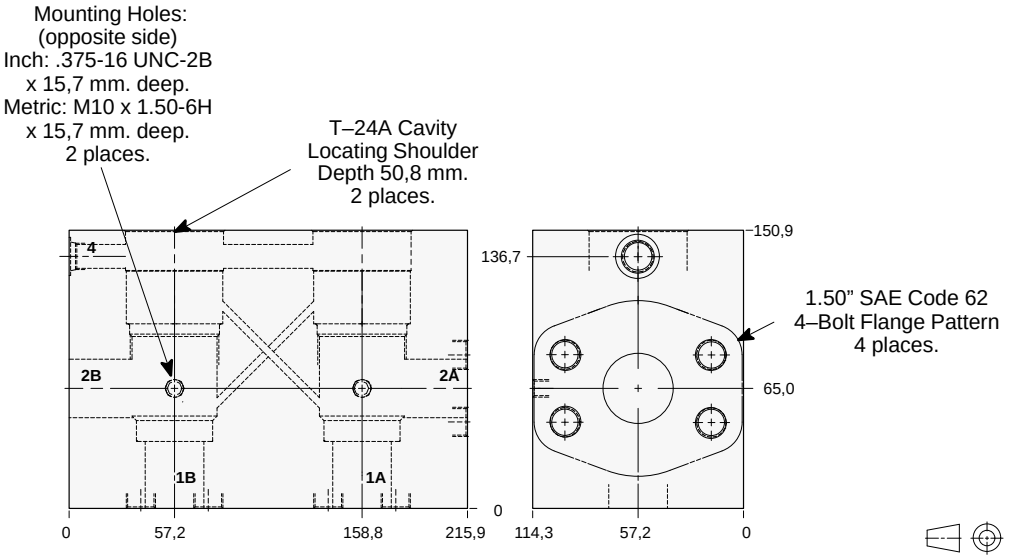

Mounting Hole Dimensions	*Port 4*	ALUMINIUM		SG IRON	
		Model Code	*List Price*	*Model Code*	*List Price*
Inch	SAE-6	**XL6**		**XL6/S**	
Metric	.25 BSPP	**XL6/M**		**XL6/T**	

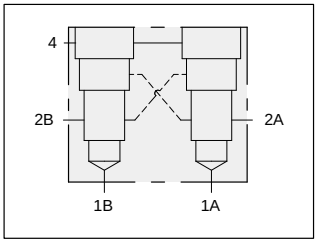

Two cavity cross–piloted 2.00” SAE Code 61 flange port body with common port 4 for load control applications.

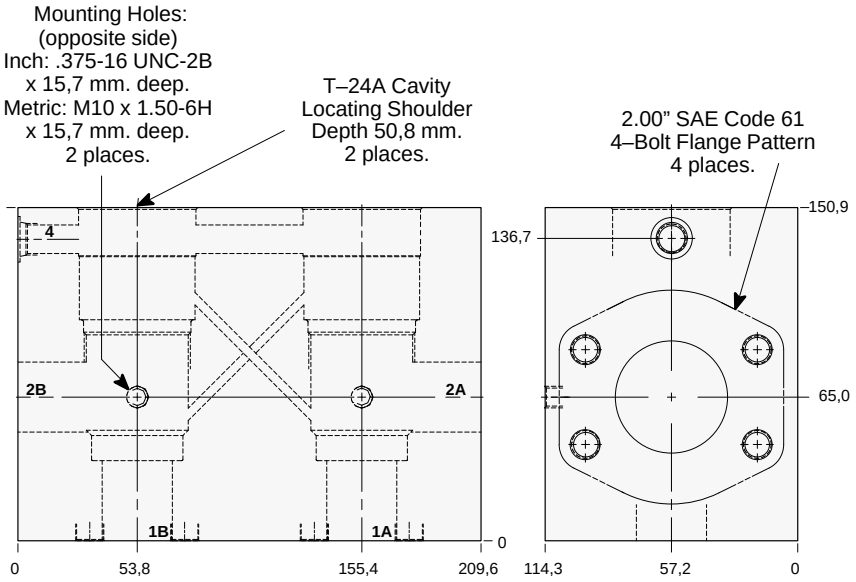

Mounting Hole Dimensions	*Port 4*	ALUMINIUM		SG IRON	
		Model Code	*List Price*	*Model Code*	*List Price*
Inch	SAE-6	**XLS**		**XLS/S**	
Metric	.25 BSPP	**XLS/M**		**XLS/T**	

TYPICAL CARTRIDGES USED WITH THIS BODY

CWIA - *** Page 4.19
CWIG - *** Page 4.21
CVIV - *** Page 4.23

Instructions for ordering complete cartridge and body assemblies. Page iii

Pressure ratings, material specifications. Page 11.02

SAE Specifications. Page 11.03

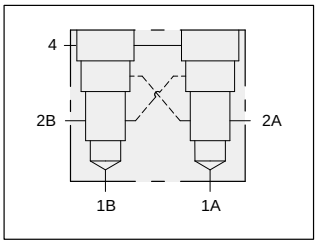

Two cavity cross–piloted 2.00” SAE Code 62 flange port body with common port 4 for load control applications.

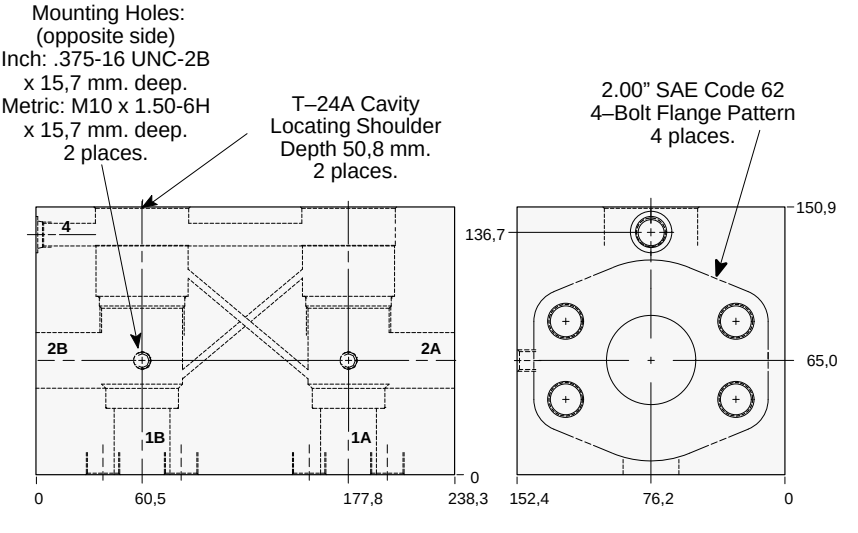

Mounting Hole Dimensions	*Port 4*	ALUMINIUM		SG IRON	
		Model Code	*List Price*	*Model Code*	*List Price*
Inch	SAE-6	**XL8**		**XL8/S**	
Metric	.25 BSPP	**XL8/M**		**XL8/T**	

TYPICAL CARTRIDGES USED WITH THIS BODY

CWIA - *** Page 4.19
CWIG - *** Page 4.21
CVIV - *** Page 4.23

Instructions for ordering complete cartridge and body assemblies. Page iii

Pressure ratings, material specifications. Page 11.02

SAE Specifications. Page 11.03

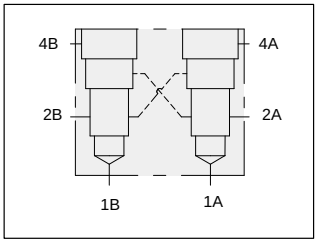

Two cavity cross–piloted 1.50” SAE Code 61 flange port body with independent port 4 for load control applications.

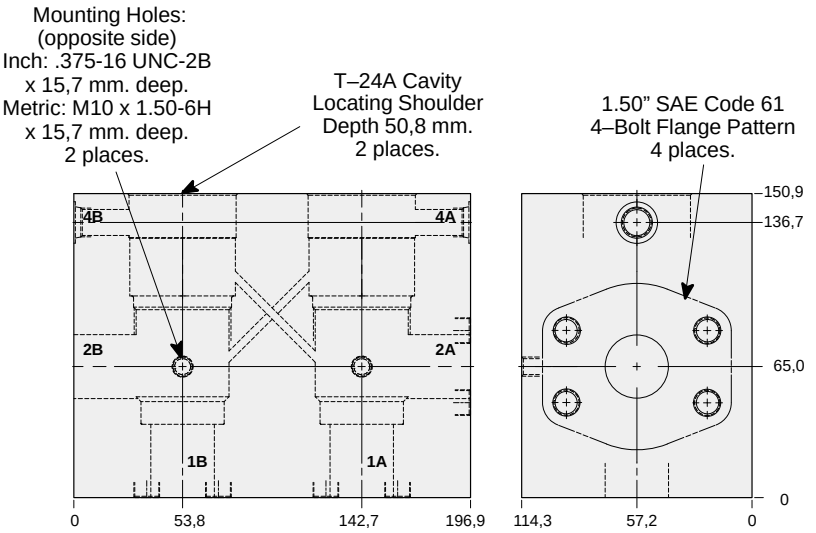

TYPICAL CARTRIDGES USED WITH THIS BODY

CWIA - *** Page 4.19
CWIG - *** Page 4.21
CVIV - *** Page 4.23

Instructions for ordering complete cartridge and body assemblies. Page viii

Pressure ratings, material specifications. Page 11.02

SAE Specifications. Page 11.03

Mounting Hole Dimensions	*Ports 4A & 4B*	ALUMINIUM		SG IRON	
		Model Code	*List Price*	*Model Code*	*List Price*
Inch	SAE-6	**XSR**		**XSR/S**	
Metric	.25 BSPP	**XSR/M**		**XSR/T**	

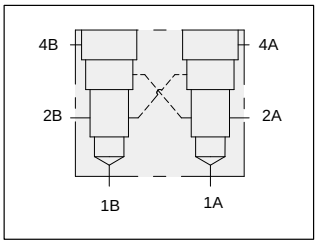

Two cavity cross–piloted 1.50” SAE Code 62 flange port body with independent port 4 for load control applications.

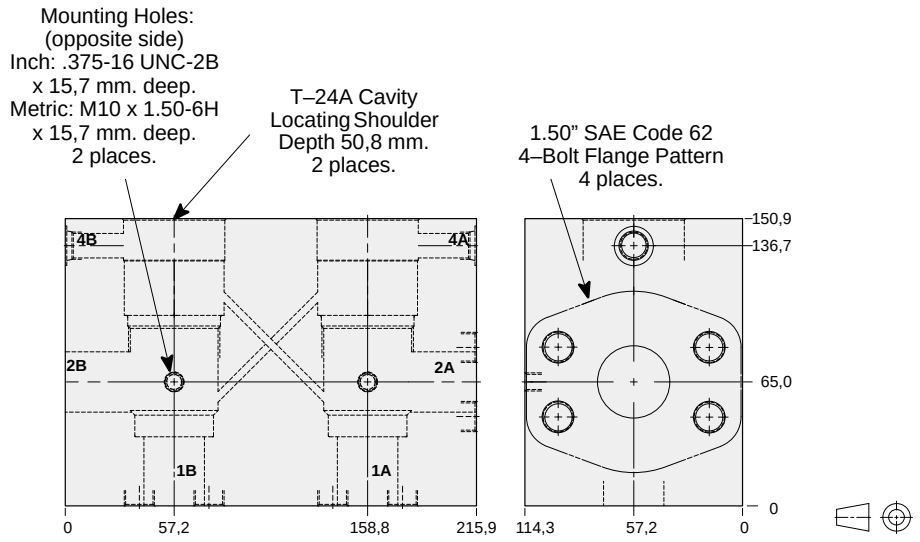

TYPICAL CARTRIDGES USED WITH THIS BODY

CWIA - *** Page 4.19
CWIG - *** Page 4.21
CVIV - *** Page 4.23

Instructions for ordering complete cartridge and body assemblies. Page viii

Pressure ratings, material specifications. Page 11.02

SAE Specifications. Page 11.03

Mounting Hole Dimensions	*Ports 4A & 4B*	ALUMINIUM		SG IRON	
		Model Code	*List Price*	*Model Code*	*List Price*
Inch	SAE-6	**XS6**		**XS6/S**	
Metric	.25 BSPP	**XS6M**		**XS6/T**	

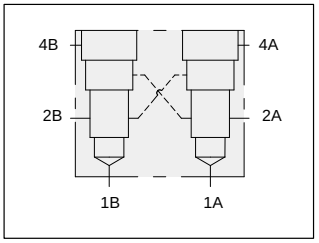

Two cavity cross–piloted 2.00” SAE Code 61 flange port body with independent port 4 for load control applications.

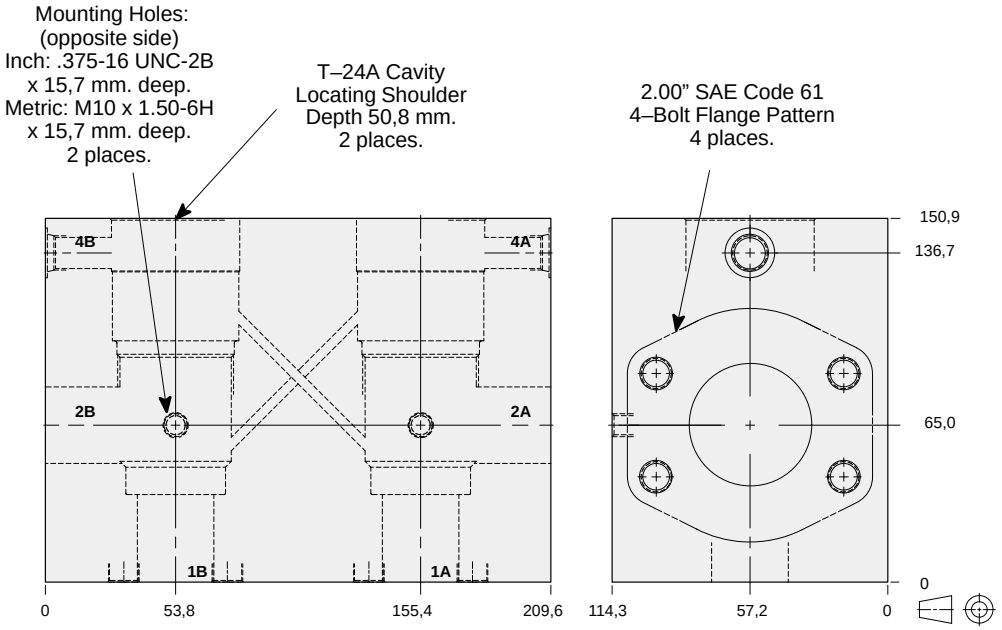

Mounting Hole Dimensions	*Port 4*	ALUMINIUM		SG IRON	
		Model Code	*List Price*	*Model Code*	*List Price*
Inch	SAE-6	**XSS**		**XSS/S**	
Metric	.25 BSPP	**XSS/M**		**XSS/T**	

TYPICAL CARTRIDGES USED WITH THIS BODY

CWIA - *** Page 4.19
CWIG - *** Page 4.21
CVIV - *** Page 4.23

Instructions for ordering complete cartridge and body assemblies. Page viii

Pressure ratings, material specifications. Page 11.02

SAE Specifications. Page 11.03

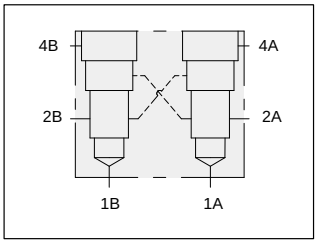

Two cavity cross–piloted 2.00” SAE Code 62 flange port body with independent port 4 for load control applications.

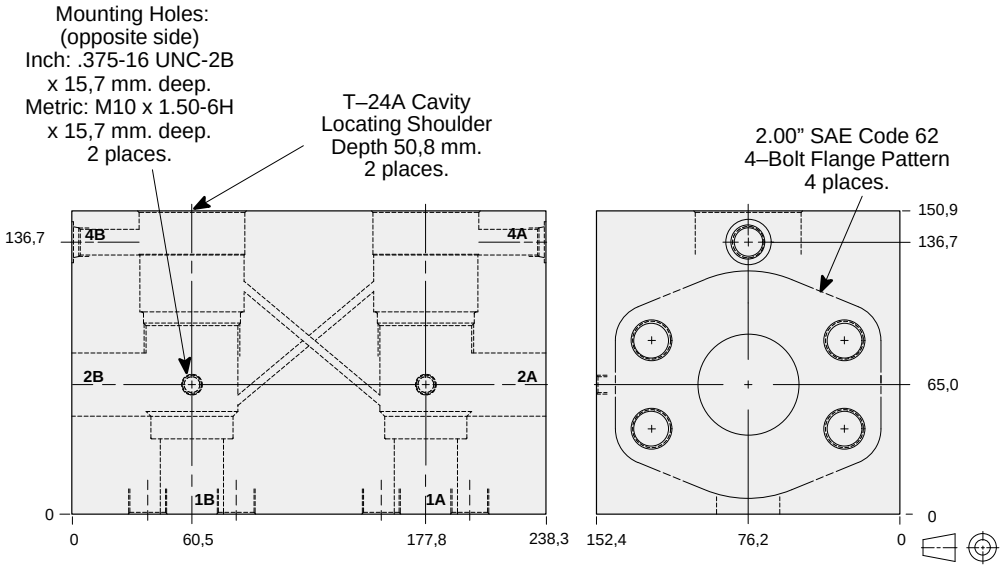

Mounting Hole Dimensions	*Port 4*	ALUMINIUM		SG IRON	
		Model Code	*List Price*	*Model Code*	*List Price*
Inch	SAE-6	**XS8**		**XS8/S**	
Metric	.25 BSPP	**XS8/M**		**XS8/T**	

TYPICAL CARTRIDGES USED WITH THIS BODY

CWIA - *** Page 4.19
CWIG - *** Page 4.21
CVIV - *** Page 4.23

Instructions for ordering complete cartridge and body assemblies. Page viii

Pressure ratings, material specifications. Page 11.02

SAE Specifications. Page 11.03

LINE MOUNT BODIES

- Aluminium rated to 210 bar and SG Iron rated to 350 bar.

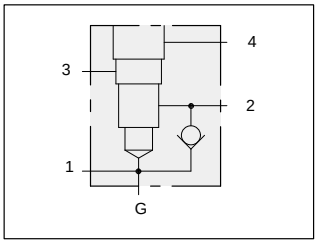

Body with high capacity port 3 reverse free flow check and gauge port for reducing/relieving applications.

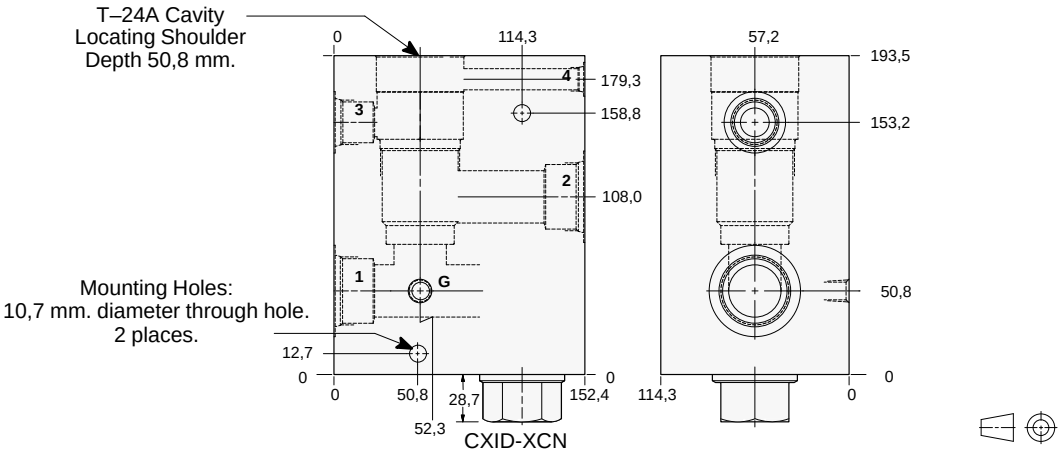

TYPICAL CARTRIDGES USED WITH THIS BODY

PVJA - *** Page 3.15
PVJB - *** Page 3.17

Cartridge seal type determines check valve seal type.

Instructions for ordering complete cartridge and body assemblies. Page viii

Pressure ratings, material specifications. Page 11.02

Ports 1 & 2	*Port 3*	*Port 4*	*Gauge Port*	ALUMINIUM		SG IRON	
				Model Code	*List Price*	*Model Code*	*List Price*
.75 NPTF	.75 NPTF	.25 NPTF	.25 NPTF	**Q4D**		**Q4D/S**	
1.00 NPTF	.75 NPTF	.25 NPTF	.25 NPTF	**Q4E**		**Q4E/S**	
1.25 NPTF	.75 NPTF	.25 NPTF	.25 NPTF	**Q4F**		**Q4F/S**	
SAE-12	SAE-12	SAE-6	.25 NPTF	**Q4L**		**Q4L/S**	
SAE-16	SAE-12	SAE-6	.25 NPTF	**Q4M**		**Q4M/S**	
SAE-20	SAE-12	SAE-6	.25 NPTF	**Q4N**		**Q4N/S**	
.75 BSPP	.75 BSPP	.25 BSPP	.25 BSPP	**Q4W**		**Q4W/S**	
1.00 BSPP	.75 BSPP	.25 BSPP	.25 BSPP	**Q4X**		**Q4X/S**	
1.25 BSPP	.75 BSPP	.25 BSPP	.25 BSPP	**Q4Y**		**Q4Y/S**	

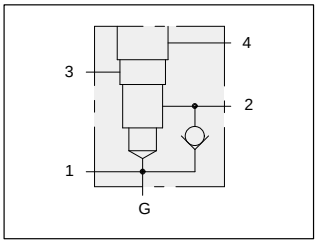

1.50” SAE Code 61 flange port body with high capacity port 3 reverse free flow check and gauge port for reducing/relieving applications.

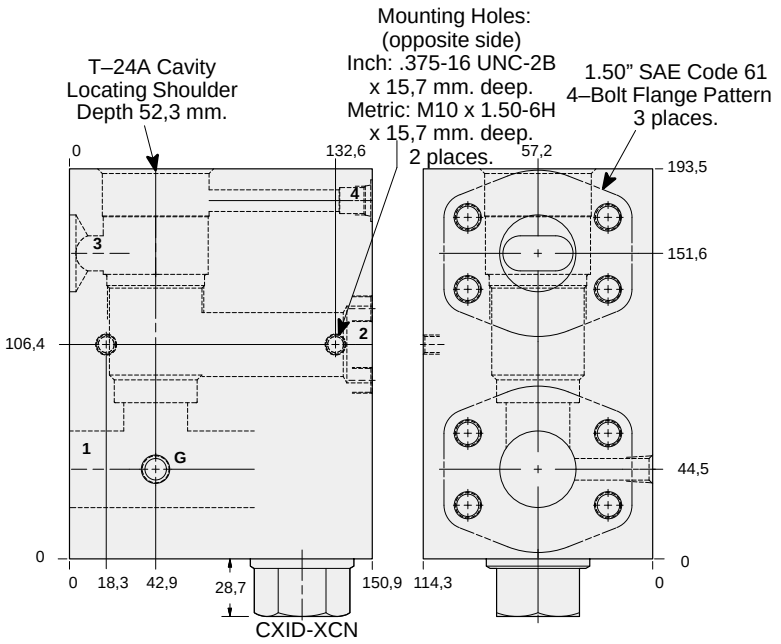

Mounting Hole Dimensions	*Port 4*	*Gauge Port*	ALUMINIUM		SG IRON	
			Model Code	*List Price*	*Model Code*	*List Price*
Inch	SAE-6	.25 NPTF	**Q4R**		**Q4R/S**	
Metric	.25 BSPP	.25 BSPP	**Q4R/M**		**Q4R/T**	

TYPICAL CARTRIDGES USED WITH THIS BODY

PVJA - *** Page 3.15
PVJB - *** Page 3.17

Cartridge seal type determines check valve seal type.

Instructions for ordering complete cartridge and body assemblies. Page viii

Pressure ratings, material specifications. Page 11.02

SAE Specifications. Page 11.03

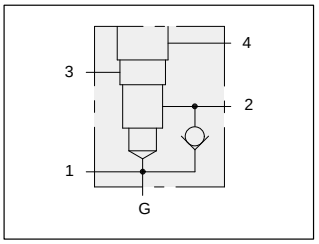

1.50” SAE Code 62 flange port body with high capacity port 3 reverse free flow check and gauge port for reducing/relieving applications.

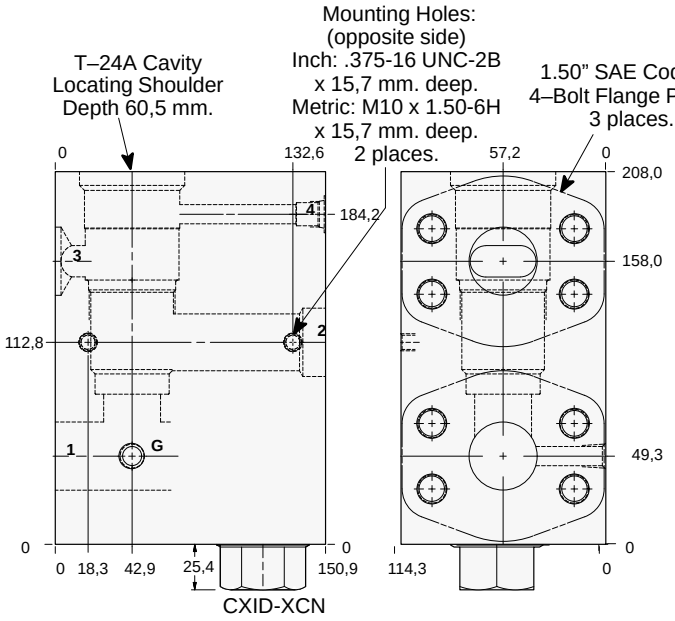

Mounting Hole Dimensions	*Port 4*	*Gauge Port*	ALUMINIUM		SG IRON	
			Model Code	*List Price*	*Model Code*	*List Price*
Inch	SAE-6	.25 NPTF	**Q46**		**Q46/S**	
Metric	.25 BSPP	.25 BSPP	**Q46/M**		**Q46/T**	

TYPICAL CARTRIDGES USED WITH THIS BODY

PVJA - *** Page 3.15
PVJB - *** Page 3.17

Cartridge seal type determines check valve seal type.

Instructions for ordering complete cartridge and body assemblies. Page viii

Pressure ratings, material specifications. Page 11.02

SAE Specifications. Page 11.03

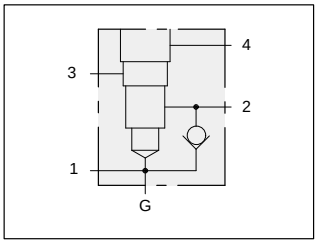

TYPICAL CARTRIDGES USED WITH THIS BODY

PVJA - *** Page 3.15
PVJB - *** Page 3.17

Cartridge seal type determines check valve seal type.

Instructions for ordering complete cartridge and body assemblies. Page viii

Pressure ratings, material specifications. Page 11.02

SAE Specifications. Page 11.03

2.00” SAE Code 61 flange port body with high capacity port 3 reverse free flow check and gauge port for reducing/relieving applications.

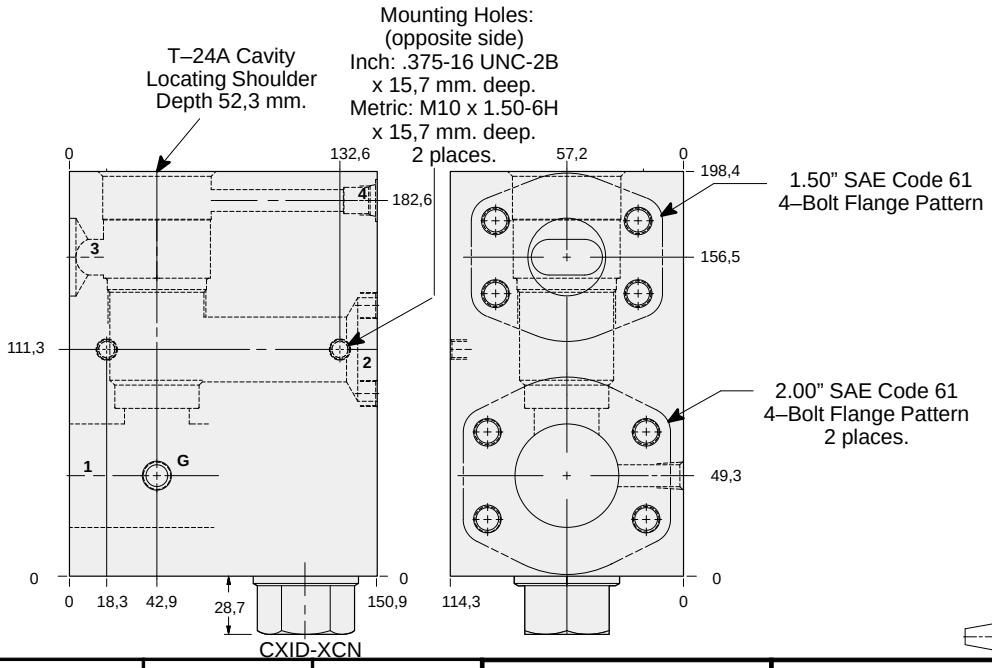

Mounting Hole Dimensions	*Port 4*	*Gauge Port*	ALUMINIUM		SG IRON	
			Model Code	*List Price*	*Model Code*	*List Price*
Inch	SAE-6	.25 NPTF	**Q4S**		**Q4S/S**	
Metric	.25 BSPP	.25 BSPP	**Q4S/M**		**Q4S/T**	

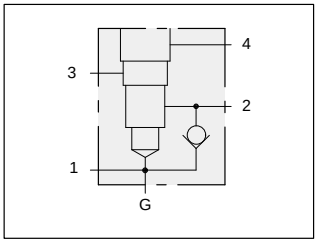

TYPICAL CARTRIDGES USED WITH THIS BODY

PVJA - *** Page 3.15
PVJB - *** Page 3.17

Cartridge seal type determines check valve seal type.

Instructions for ordering complete cartridge and body assemblies. Page viii

Pressure ratings, material specifications. Page 11.02

SAE Specifications. Page 11.03

2.00” SAE Code 62 flange port body with high capacity port 3 reverse free flow check and gauge port for reducing/relieving applications.

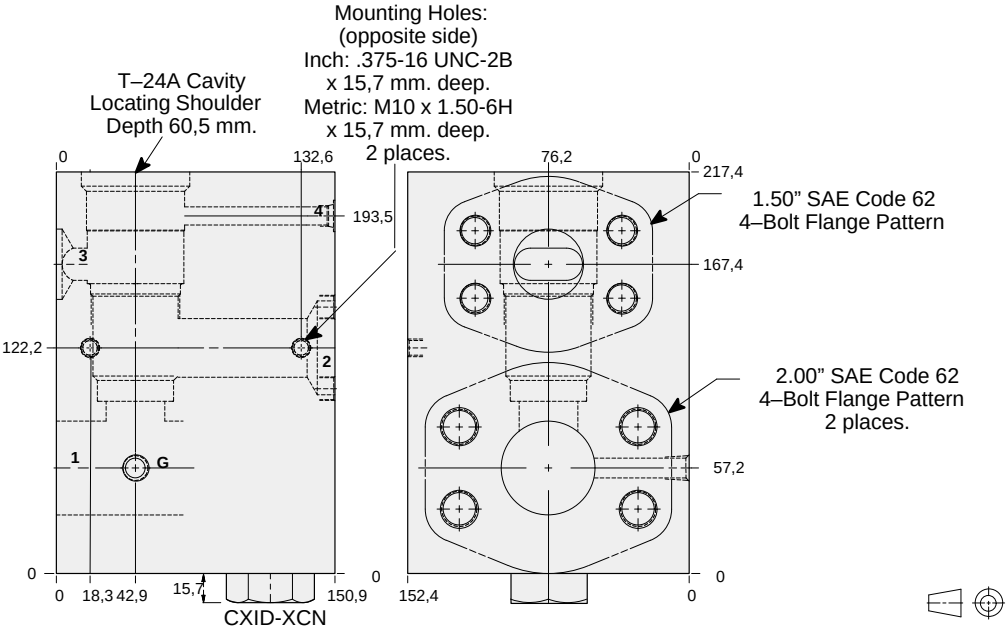

Mounting Hole Dimensions	*Port 4*	*Gauge Port*	ALUMINIUM		SG IRON	
			Model Code	*List Price*	*Model Code*	*List Price*
Inch	SAE-6	.25 NPTF	**Q48**		**Q48/S**	
Metric	.25 BSPP	.25 BSPP	**Q48/M**		**Q48/T**	

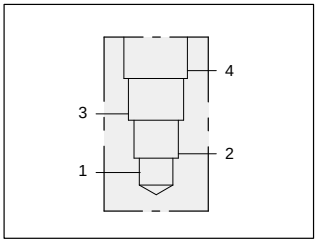

Body for flow divider/combiner applications.

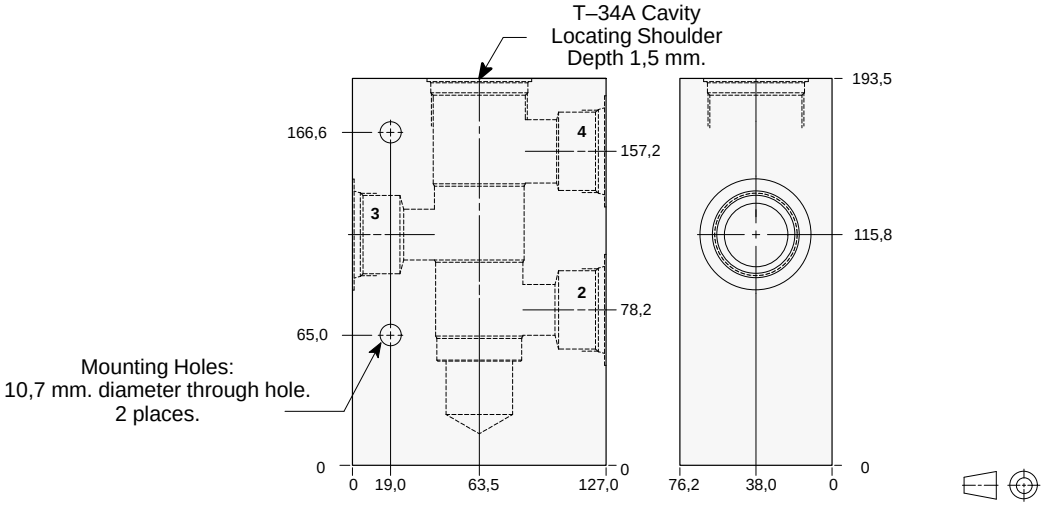

TYPICAL CARTRIDGES USED WITH THIS BODY

FSDA - *** Page 7.10
FSFA - *** Page 7.11
FSFS - *** Page 7.13
FSFH - *** Page 7.15
DSIH - *** Page 10.07

Instructions for ordering complete cartridge and body assemblies. Page viii

Pressure ratings, material specifications. Page 11.02

Ports 2, 3 & 4	ALUMINIUM		SG IRON	
	Model Code	List Price	Model Code	List Price
1.00 NPTF	**QME**		**QME/S**	
1.25 NPTF	**QMF**		**QMF/S**	
SAE-16	**QMM**		**QMM/S**	
SAE-20	**QMN**		**QMN/S**	
1.00 BSPP	**QMX**		**QMX/S**	
1.25 BSPP	**QMY**		**QMY/S**	

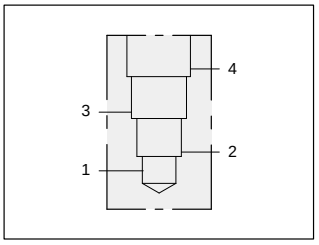

Four port body.

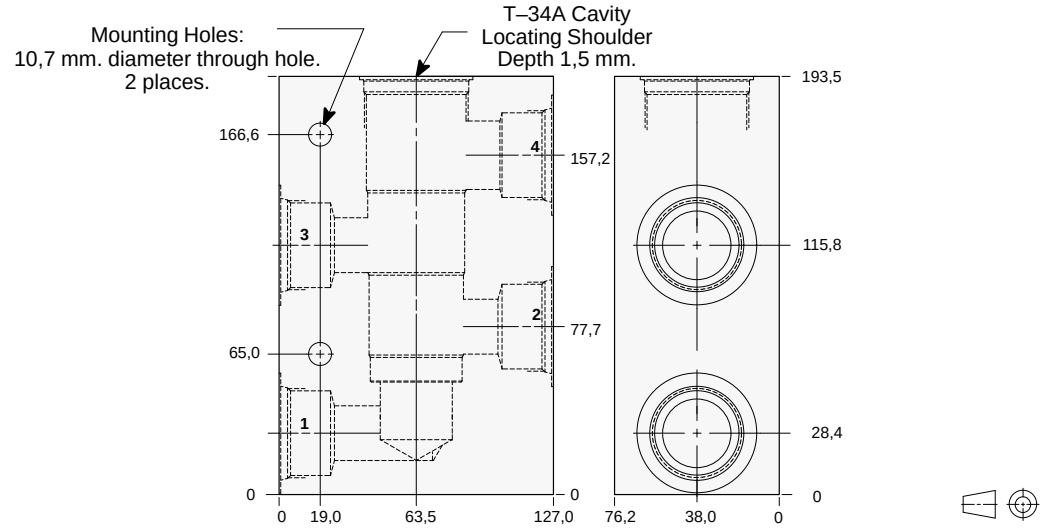

Instructions for ordering complete cartridge and body assemblies. Page viii

Pressure ratings, material specifications. Page 11.02

Ports 2, 3 & 4	ALUMINIUM		SG IRON	
	Model Code	List Price	Model Code	List Price
1.00 NPTF	**QNE**		**QNE/S**	
1.25 NPTF	**QNF**		**QNF/S**	
SAE-16	**QNM**		**QNM/S**	
SAE-20	**QNN**		**QNN/S**	
1.00 BSPP	**QNX**		**QNX/S**	
1.25 BSPP	**QNY**		**QNY/S**	

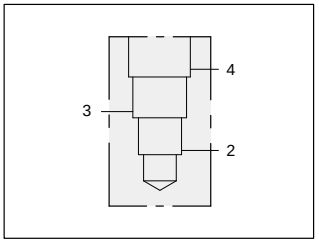

TYPICAL CARTRIDGES USED WITH THIS BODY

FSFD	- ***	Page	7.09
FSFA	- ***	Page	7.11
FSFS	- ***	Page	7.13
FSFH	- ***	Page	7.15
DSIH	- ***	Page	10.07

Instructions for ordering complete cartridge and body assemblies. Page viii

Pressure ratings, material specifications. Page 11.02

SAE Specifications. Page 11.03

1.00” SAE Code 61 flange port body for flow divider/combiner applications.

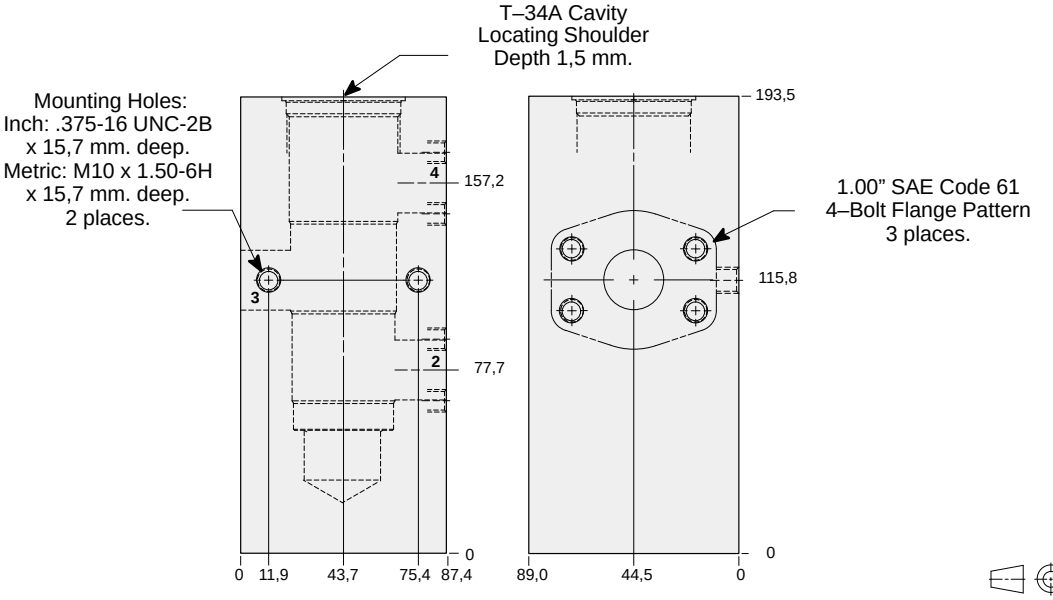

Mounting Hole Dimensions	ALUMINIUM		SG IRON	
	Model Code	*List Price*	*Model Code*	*List Price*
Inch	**QMP**		**QMP/S**	
Metric	**QMP/M**		**QMP/T**	

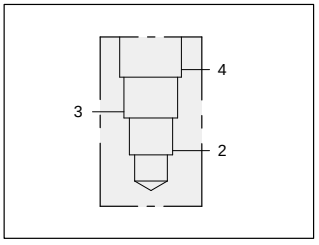

TYPICAL CARTRIDGES USED WITH THIS BODY

FSFD	- ***	Page	7.09
FSFA	- ***	Page	7.11
FSFS	- ***	Page	7.13
FSFH	- ***	Page	7.15
DSIH	- ***	Page	10.07

Instructions for ordering complete cartridge and body assemblies. Page viii

Pressure ratings, material specifications. Page 11.02

SAE Specifications. Page 11.03

1.00” SAE Code 62 flange port body for flow divider/combiner applications.

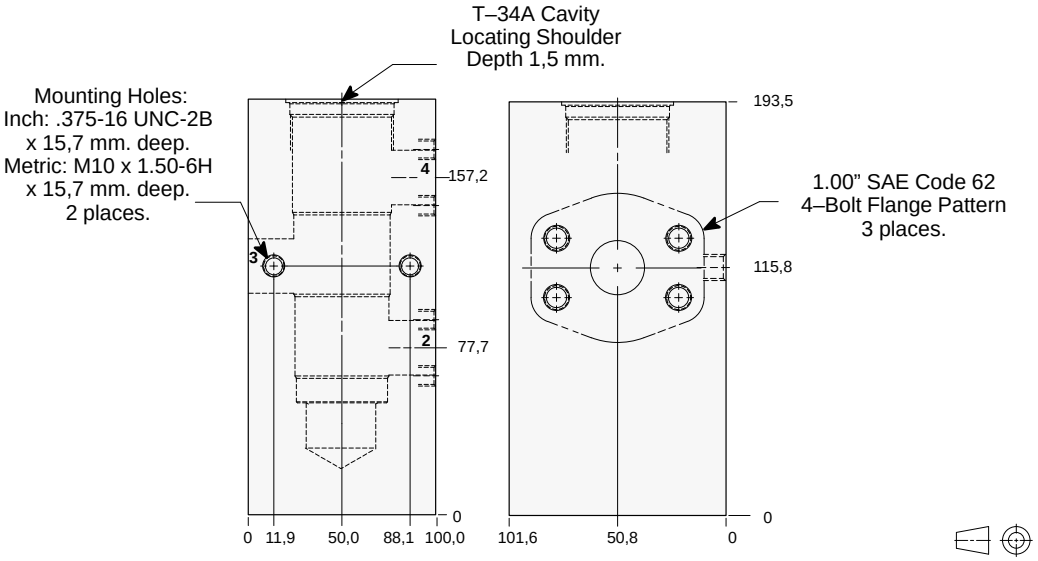

Mounting Hole Dimensions	ALUMINIUM		SG IRON	
	Model Code	*List Price*	*Model Code*	*List Price*
Inch	**QM4**		**QM4/S**	
Metric	**QM4/M**		**QM4/T**	

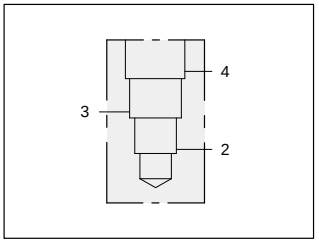

TYPICAL CARTRIDGES USED WITH THIS BODY

FSFD	- ***	Page	7.09
FSFA	- ***	Page	7.11
FSFS	- ***	Page	7.13
FSFH	- ***	Page	7.15
DSIH	- ***	Page	10.07

Instructions for ordering complete cartridge and body assemblies. Page viii

Pressure ratings, material specifications. Page 11.02

SAE Specifications. Page 11.03

1.25” SAE Code 61 flange port body for flow divider/combiner applications.

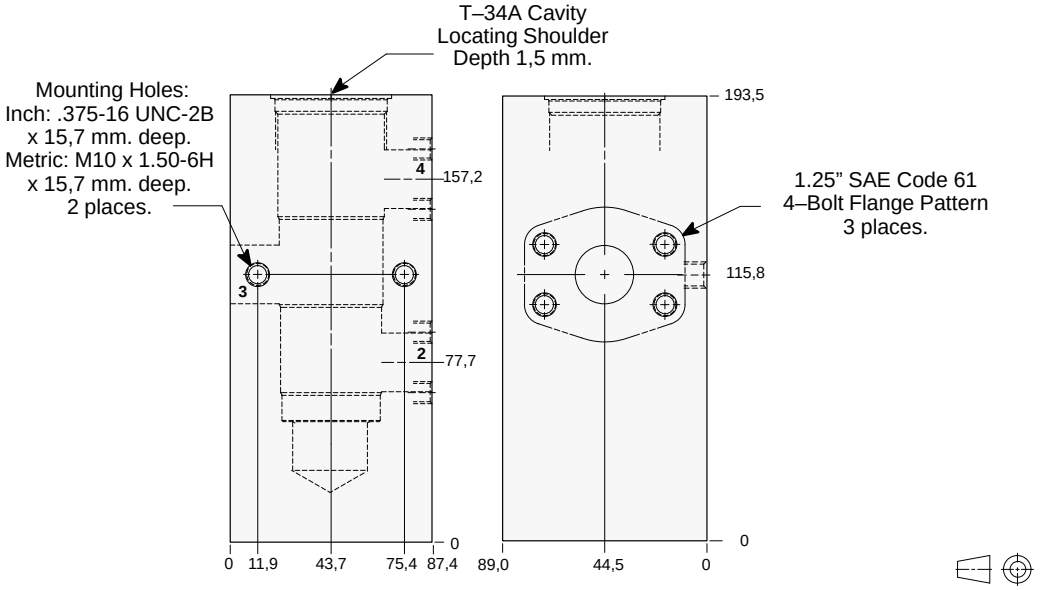

Mounting Hole Dimensions	ALUMINIUM		SG IRON	
	Model Code	*List Price*	*Model Code*	*List Price*
Inch	**QMQ**		**QMQ/S**	
Metric	**QMQ/M**		**QMQ/T**	

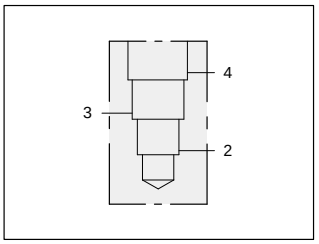

TYPICAL CARTRIDGES USED WITH THIS BODY

FSFD	- ***	Page	7.09
FSFA	- ***	Page	7.11
FSFS	- ***	Page	7.13
FSFH	- ***	Page	7.15
DSIH	- ***	Page	10.07

Instructions for ordering complete cartridge and body assemblies. Page viii

Pressure ratings, material specifications. Page 11.02

SAE Specifications. Page 11.03

1.25” SAE Code 62 flange port body for flow divider/combiner applications.

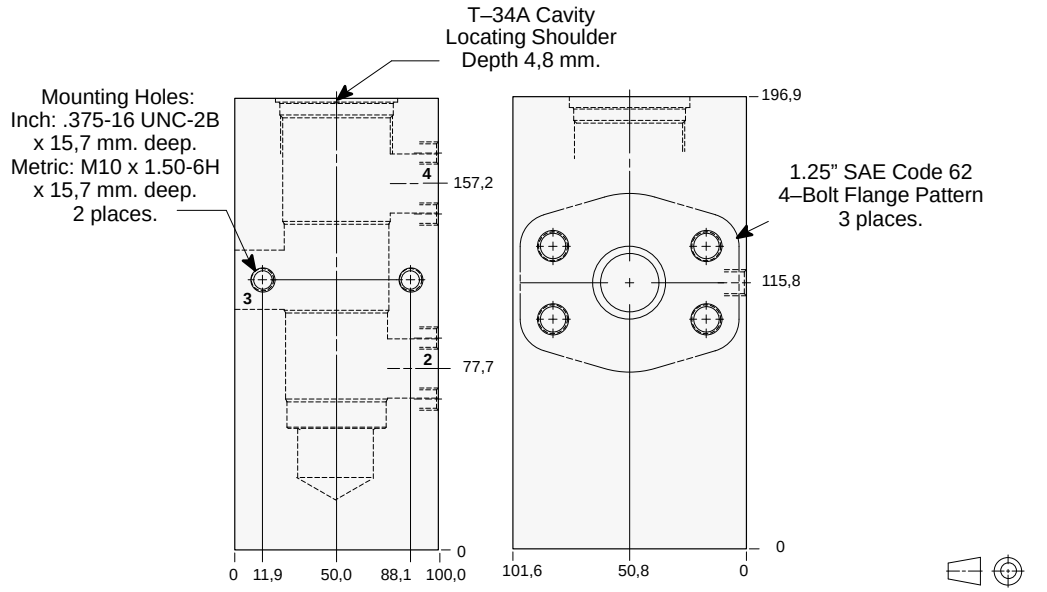

Mounting Hole Dimensions	ALUMINIUM		SG IRON	
	Model Code	*List Price*	*Model Code*	*List Price*
Inch	**QM5**		**QM5/S**	
Metric	**QM5/M**		**QM5/T**	

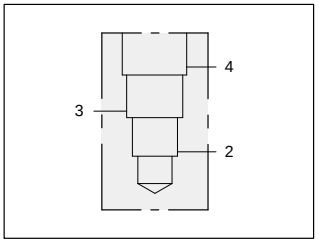

TYPICAL CARTRIDGES USED WITH THIS BODY

FSFD	- ***	Page	7.09
FSFA	- ***	Page	7.11
FSFS	- ***	Page	7.13
FSFH	- ***	Page	7.15
DSIH	- ***	Page	10.07

Instructions for ordering complete cartridge and body assemblies. Page viii

Pressure ratings, material specifications. Page 11.02

SAE Specifications. Page 11.03

1.50” SAE Code 61 flange port body for flow divider/combiner applications.

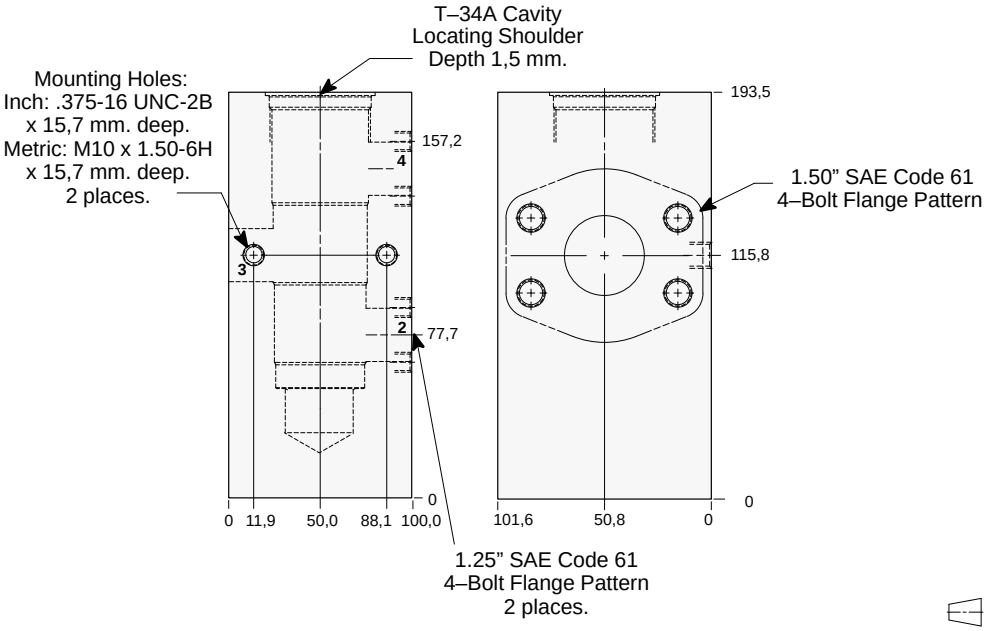

Mounting Hole Dimensions	ALUMINIUM		SG IRON	
	Model Code	*List Price*	*Model Code*	*List Price*
Inch	**QMR**		**QMR/S**	
Metric	**QMR/M**		**QMR/T**	

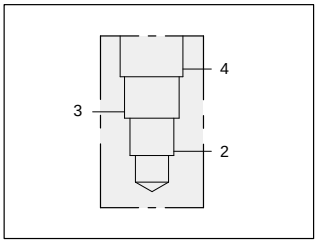

TYPICAL CARTRIDGES USED WITH THIS BODY

FSFD	- ***	Page	7.09
FSFA	- ***	Page	7.11
FSFS	- ***	Page	7.13
FSFH	- ***	Page	7.15
DSIH	- ***	Page	10.07

Instructions for ordering complete cartridge and body assemblies. Page viii

Pressure ratings, material specifications. Page 11.02

SAE Specifications. Page 11.03

1.50” SAE Code 62 flange port body for flow divider/combiner applications.

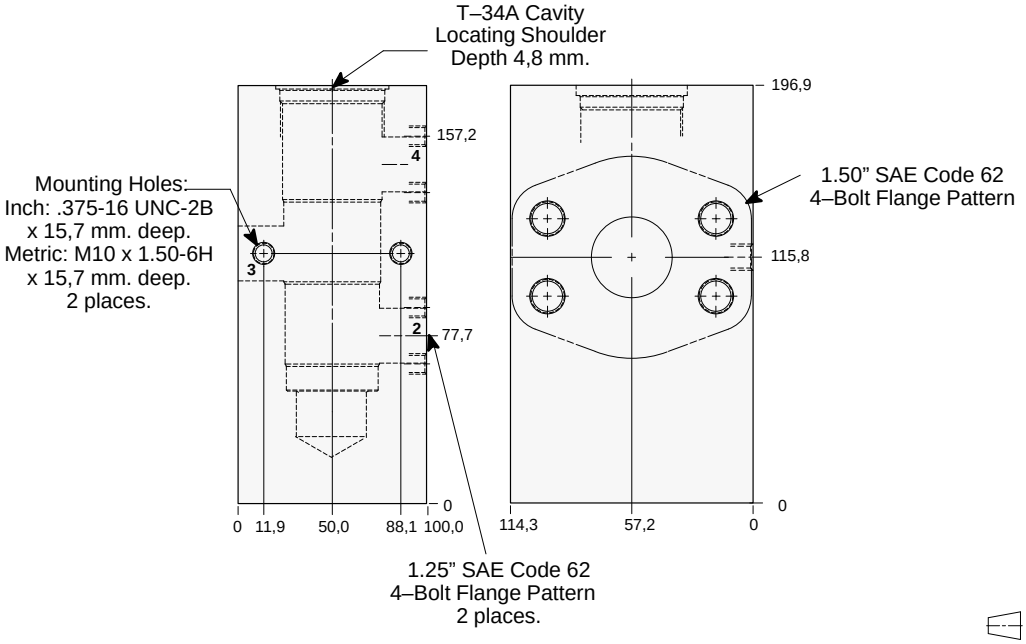

Mounting Hole Dimensions	ALUMINIUM		SG IRON	
	Model Code	*List Price*	*Model Code*	*List Price*
Inch	**QM6**		**QM6/S**	
Metric	**QM6/M**		**QM6/T**	

VALVE ASSEMBLY PACKAGES

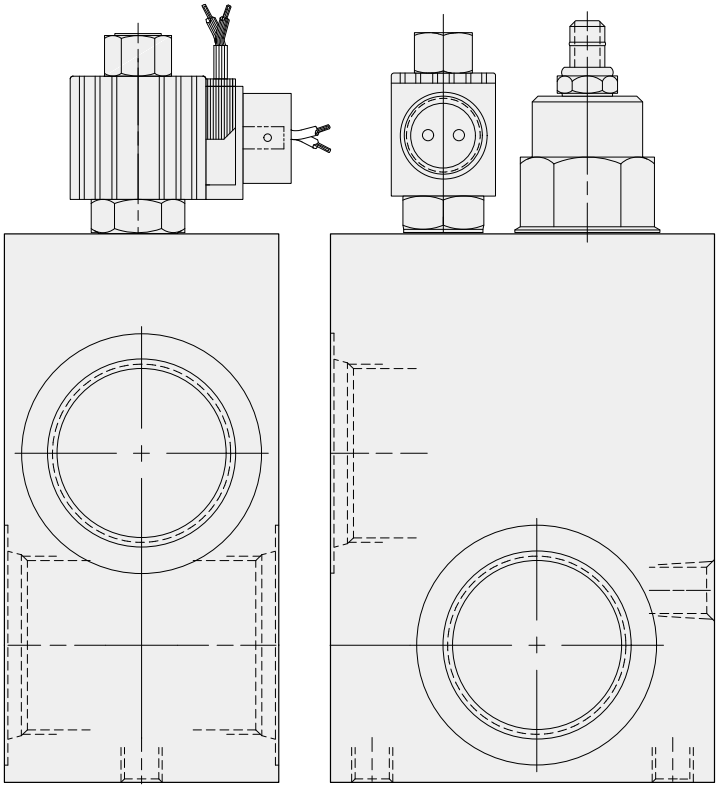

VALVE ASSEMBLY PACKAGE LOCATOR

VALVE PACKAGE	FUNCTION	ASSEMBLY		CARTRIDGE INCLUDED	
		MODEL CODE	PAGE	MODEL CODE	PAGE
Solenoid Operated Ventable Relief Assembly *Normally open*	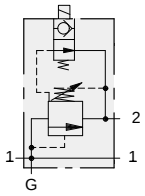	**YRCG–LAN–****	13.02	**RVCA**	1.18
		YREG–LAN–**	13.04	**RVEA**	1.18
		YRFG–LAN–**	13.06, 13.07	**RVGA**	1.19
		YRHG–LAN–**	13.10, 13.11	**RVIA**	1.19
	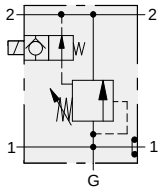	**YROG–LAN–****	13.03	**RVCA**	1.18
		YRPG–LAN–**	13.05	**RVEA**	1.18
		YRQG–LAN–**	13.08, 13.09	**RVGA**	1.19
		YRRG–LAN–**	13.12, 13.13	**RVIA**	1.19
Solenoid Operated Ventable Relief Assembly *Normally Closed*	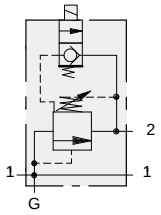	**YRCH–LAN–****	13.02	**RVCA**	1.18
		YREH–LAN–**	13.04	**RVEA**	1.18
		YRFH–LAN–**	13.06, 13.07	**RVGA**	1.19
		YRHH–LAN–**	13.10, 13.11	**RVIA**	1.19
	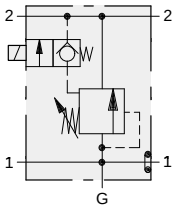	**YROH–LAN–****	13.03	**RVCA**	1.18
		YRPH–LAN–**	13.05	**RVEA**	1.18
		YRQH–LAN–**	13.08, 13.09	**RVGA**	1.19
		YRRH–LAN–**	13.12, 13.13	**RVIA**	1.19
Solenoid and Pilot Relief Assembly *Normally Open*	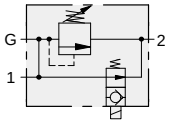	**YRAG–LAN–****	13.14	**RBAC**	1.16
Solenoid and Pilot Relief Assembly *Normally Closed*	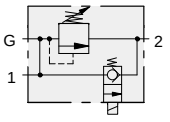	**YRAH–LAN–****	13.14	**RBAC**	1.16
Cross-Port Relief Assembly with Shuttle and Solenoid Operated Vent *Normally Open*	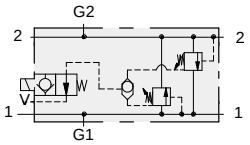	**YVCG–LAN–****	13.15	**RVCA**	1.18
				CSAB	10.08
		YVEG–LAN–**	13.16	**RVEA**	1.18
				CSAB	10.08
		YVFG–LAN–**	13.17, 13.18, 13.19	**RVGA**	1.19
				CSAB	10.08

13

VALVE ASSEMBLY PACKAGE LOCATOR

VALVE PACKAGE	FUNCTION	ASSEMBLY		CARTRIDGE INCLUDED	
		MODEL CODE	PAGE	MODEL CODE	PAGE
Cross-Port Relief Assembly with Shuttle and Solenoid Operated Vent *Normally Closed*	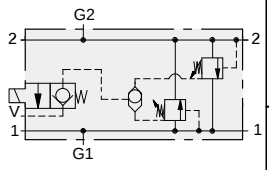	**YVCH–LAN–****	13.15	**RVCA**	1.18
				CSAB	10.08
		YVEH–LAN–**	13.16	**RVEA**	1.18
				CSAB	10.08
		YVFH–LAN–**	13.17, 13.18, 13.19	**RVGA**	1.19
				CSAB	10.08
Hydrostatic Transmission Assembly	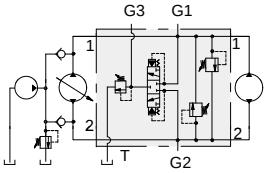	**XRDB–LCN–A***	13.20, 13.21	**DSCH**	10.06
				RDDA	1.10
				RPEC	1.06
		XRFB–LCN–A*	13.22, 13.23	**DSEH**	10.06
				RDFA	1.10
				RPEC	1.06
		XRHB–LCN–A*	13.24, 13.25	**DSGH**	10.07
				RDHA	1.11
				RPGC	1.06
		XRJB–LCN–A*	13.26, 13.27	**DSIH**	10.07
				RDJA	1.11
				RPIC	1.07
Hot Oil Shuttle and Relief Assembly	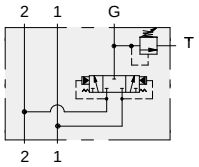	**XRDC–LNN–A***	13.28, 13.29	**DSCH**	10.06
				RPEC	1.06
		XRFC–LNN–A*	13.30, 13.31	**DSEH**	10.06
				RPEC	1.06
		XRHC–LNN–A*	13.32, 13.33	**DSGH**	10.07
				RPGC	1.06
		XRJC–LNN–A*	13.35, 13.36, 13.37	**DSIH**	10.07
				RPIC	1.07
Flow Divider/ Combiner Tractive Drive Assembly	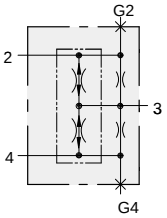	**YGCB–XAN–****	13.38	**FSCH**	7.14
		YGDB–XAN–**	13.39	**FSDH**	7.14
		YGEB–XAN–**	13.40	**FSEH**	7.15
		YGFB–XAN–**	13.41	**FSFH**	7.15

13

VALVE ASSEMBLY PACKAGE LOCATOR

VALVE PACKAGE	FUNCTION	ASSEMBLY		CARTRIDGE INCLUDED	
		MODEL CODE	PAGE	MODEL CODE	PAGE
Regeneration Assembly Pressure Sensitive	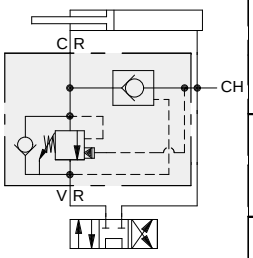	**YDCC–LHN–A***	13.43	**CODA**	10.12
				CBCA	4.10
		YDEC–LHN–A*	13.44	**COFA**	10.12
				CBEA	4.10
		YDGC–LHN–A*	13.45	**COHA**	10.13
				CBGA	4.11
		YDHC–LHN–A*	13.47	**COHA (2)**	10.13
				CBGA (2)	4.11
		YDJC–LHN–A*	13.48	**COJA**	10.13
				CBIA	4.11
		YDJC–LHN–A*	13.49	**COJA (2)**	10.13
				CBIA (2)	4.11
Regeneration Assembly Pressure Sensitive with Load Locking Pilot Operated Check	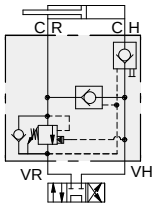	**YDCD–LHN–A***	13.43	**CODA**	10.12
				CBCA	4.10
				CKEB	4.16
		YDED–LHN–A*	13.44	**COFA**	10.12
				CBEA	4.10
				CKEB	4.16
		YDGD–LHN–A*	13.46	**COHA**	10.13
				CBGA	4.11
				CKGB	4.17
Accumulator Dump Assembly	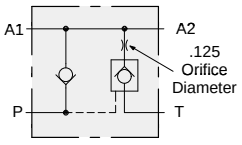	**YCFE–XAN–A***	13.50	**CXFA**	5.08
				COFA	10.12
		YCHE–XAN–A*	13.51	**CXHA**	5.09
				CODA	10.12
Pump Circuit Manifold for Multiple Pump Circuits	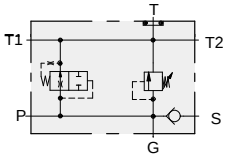	**YFRC–LAN–A***	13.52	**CXFA**	5.08
				NQEB	10.16
				RPGC	1.06
		YFRE–LAN–A*	13.52	**CXHA**	5.09
				NQEB	10.16
				RPIC	1.07

13

VALVE PACKAGE	FUNCTION	ASSEMBLY		CARTRIDGE INCLUDED	
		MODEL CODE	PAGE	MODEL CODE	PAGE
Pump Circuit Mainfold for Single Pump Circuits	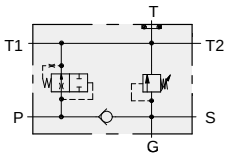	**YFRD–LAN–A***	13.53	**CXFA**	5.08
				NQEB	10.16
				RPGC	1.06
		YFRF–LAN–A*	13.53	**CXHA**	5.09
				NQEB	10.16
				RPIC	1.07
Priority Flow Control with Controlled Flow Port Relief Valve	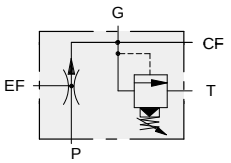	**YRDR–LAN–****	13.54	**FRCA**	6.02
				RPEC	1.06
		YREM–LAN–**	13.54	**FRDA**	6.02
				RPEC	1.06
		YRFF–LAN–**	13.55	**FREA**	6.03
				RPEC	1.06
		YRHF–LAN–**	13.56	**FRFA**	6.03
				RPGC	1.06

13

VALVE ASSEMBLY PACKAGE CROSS REFERENCE CHART

This catalogue contains many new bodies that incorporate a free flow check valve and are designated by a three-position model code. These new products provide a functional replacement, and in most cases a physical replacement, for products that were offered only as valve assemblies in previous catalogues. (A SUN Valve Assembly (or Y Assembly), by definition, contains two or more dissimilar cartridges to provide a specific hydraulic function.)

In all cases where a new body with free flow check is available, it is offered in place of the older configuration valve assemblies that have appeared in previous catalogues. **No models that appeared in previous catalogues have been obsoleted. All previously catalogued products can still be ordered using their original model codes**. However, the preferred method or ordering these products is now as follows: ***Old Model Code:*** YPEF-ABN-BA, ***New Model Code: Cartridge-***PBFC-ABN and ***Body-***BB2.

The new method of ordering combines the seven-position cartridge model code (PBFC-ABN) with the three-position body model code (BB2) to create the new valve assembly model code. The cross references that follow detail the differences between older SUN catalogues and this SUN catalogue in regard to valve assemblies.

FUNCTIONAL AND PHYSICAL REPLACEMENTS

Assembly Model Code	*Catalogue Code* *Cartridge*	*Body*	*Assembly Model Code*	*Catalogue Code* *Cartridge*	*Body*	*Assembly Model Code*	*Catalogue Code* *Cartridge*	*Body*
YCCD–***–A*	CBCA–***–EM*		YCGH–***–G*	CBGG–***–HN*		YPFJ–BBN–BB	PBHC–BBN–BKJ	
YCCD–***–G*	CBCG–***–EM*		YCGH–***–H*	CBGH–***–HN*		YPFK–BBN–BB	PPHC–BBN–BK2	
YCCD–***–H*	CBCH–***–EM*		YCHC–***–A*	RPIC–***–IN*		YPGA–***–C*	PBHB–***–H2*	
YCCE–***–A*	CBCA–***–EP*		YCJC–***–AS	RPKC–***–LNS		YPGB–***–C*	PBHB–***–H3*	
YCCE–***–G*	CBCG–***–EP*		YPCA–***–AA	PBDB–***–EB2		YPGC–***–C*	PPHB–***–H4*	
YCCE–***–H*	CBCH–***–EP*		YPCB–***–AA	PBDB–***–EB3		YPGD–***–CA	PBHB–***–HBK	
YCCG–***–A*	CBCA–***–EQ*		YPCR–***–AA	PPDB–***–EB3		YPGE–***–CA	PPHB–***–HBK	
YCCG–***–G*	CBCG–***–EQ*		YPCS–***–AA	PPDB–***–EB2		YPJA–***–C*	PBJB–***–K2*	
YCCG–***–H*	CBCH–***–EQ*		YPDB–***–C*	PBDB–***–E3*		YPJC–***–C*	PPJB–***–K4*	
YCCH–***–A*	CBCA–***–EN*		YPDD–***–C*	PPDB–***–E4*		YRCA–***–AA	RPEC–***–FB2	
YCCH–***–G*	CBCG–***–EN*		YPDE–***–C*	PPDB–***–E5*		YRDK–***–A*	RPEC–***–FM*	
YCCH–***–H*	CBCH–***–EN*		YPEB–***–BA	PBFB–***–BB2		YREC–***–BA	RPGC–***–CB2	
YCDC–***–**	RPEC–***–FN*		YPED–***–BA	PBFB–***–BB3		YRER–***–BB	RPGC–***–CJ2	
YCED–***–A*	CBEA–***–BM*		YPEE–***–BB	PBFB–***–BJ2		YRFK–***–A*	RPGC–***–CM*	
YCED–***–G*	CBEG–***–BM*		YPEF–ABN–BA	PBFC–ABN–BB2		YRHK–***–A*	RPIC–***–IM*	
YCED–***–H*	CBEH–***–BM*		YPEG–ABN–BA	PBFC–ABN–BB3		YSCB–***–AA	RSDC–***–EB5	
YCEE–***–A*	CBEA–***–BP*		YPEH–ABN–BA	PPFC–ABN–BB2		YSCC–***–AA	RSDC–***–EB4	
YCEE–***–G*	CBEG–***–BP*		YPEI–ABN–BA	PPFC–ABN–BB3		YSDB–***–C*	RSDC–***–E7*	
YCEE–***–H*	CBEH–***–BP*		YPEL–***–C*	PPFB–***–B4*		YSDC–***–C*	RSDC–***–E8*	
YCEG–***–A*	CBEA–***–BQ*		YPEM–***–C*	PPFB–***–B5*		YSEB–***–C*	RSFC–***–B7*	
YCEG–***–G*	CBEG–***–BQ*		YPER–***–BA	PPFB–***–BB2		YSEC–***–C*	RSFC–***–B8*	
YCEG–***–H*	CBEH–***–BQ*		YPES–***–BA	PPFB–***–BB3		YSEF–***–BA	RSFC–***–BB5	
YCEH–***–A*	CBEA–***–BN*		YPET–***–BB	PBFB–***–BJ3		YSEG–***–BA	RSFC–***–BB4	
YCEH–***–G*	CBEG–***–BN*		YPEU–ABN–BB	PBFC–ABN–BJ2		YSEI–***–BB	RSFC–***–BJ5	
YCEH–***–H*	CBEH–***–BN*		YPEV–ABN–BB	PBFC–ABN–BJ3		YSEL–***–C*	RSFC–***–B6*	
YCFC–***–**	RPGC–***–CN*		YPEW–ABN–BB	PPFC–ABN–BJ2		YSEJ–***–BB	RSFC–***–BJ4	
YCGD–***–A*	CBGA–***–HM*		YPEX–ABN–BB	PPFC–ABN–BJ3		YSFB–***–AB	RSHC–***–BK4	
YCGD–***–G*	CBGG–***–HM*		YPEY–***–BB	PPFB–***–BJ2		YSFC–***–AB	RSHC–***–BK5	
YCGD–***–H*	CBGH–***–HM*		YPEZ–***–BB	PPFB–***–BJ3		YSGA–***–CA	RSHC–***–HB4	
YCGE–***–A*	CBGA–***–HP*		YPFD–***–C*	PBFB–***–B3*		YSHA–***–C*	RSHC–***–H6*	
YCGE–***–G*	CBGG–***–HP*		YPFE–***–AB	PBHB–***–BK2		YSHB–***–C*	RSHC–***–H7*	
YCGE–***–H*	CBGH–***–HP*		YPFF–***–AB	PBHB–***–BKJ		YSHC–***–C*	RSJC–***–K8*	
YCGG–***–A*	CBGA–***–HQ*		YPFG–***–AB	PPHB–***–BK2				
YCGG–***–G*	CBGG–***–HQ*		YPFH–***–AB	PPHB–***–BKJ				
YCGG–***–H*	CBGH–***–HQ*		YPFI–BBN–BB	PBHC–BBN–BK2				
YCGH–***–A*	CBGA–***–HN*		YPFL–BBN–BB	PPHC–BBN–BKJ				

Continued on next page

FUNCTIONAL ONLY REPLACEMENTS

New nine-position model codes in the following chart are physically different than the old Valve Assembly models. Differences may include physical size as well as port locations, so make sure these products are suitable to your application before ordering.

The new XR** hydrostatic transmission valve assemblies referenced below are not only physically different, but also represent a new design. This new version hydrostatic transmission valve assembly offers superior performance characteristics and greater application flexibility compared to the older version YR** hydrostatic transmission assemblies.

Valve Assembly	*Replacement*
YPDA–***–**	PBDB–***–E2*
YRDL–LQN–AK	XRDC–LNN–A*
YRDE–LQN–AL	XRDC–LNN–A*
YRDM–LQN–AM	XRFC–LNN–A*
YRDM–LQN–AM	XRFC–LNN–A*
YRGH–LCN–A*	XRFB–LCN–A*
YRGN–LCN–AQ	XRFB–LCN–AQ
YRGP–LCN–A*	XRDB–LCN–A*
YSDA–***–**	RSDC–***–E6*
YPFB–***–**	PBFB–***–B2

NO REPLACEMENT AND NOT IN THIS CATALOGUE

The Valve assemblies listed in the chart below appeared in previous SUN catalogues but do not appear in this catalogue. **These products can still be ordered using the original model code. Contact your distributor for pricing information.**

YCEJ	YFEM	YNEK	YRGD
YDFD	YFEN	YNEM	YRGJ
YFCH	YFEO	YRDC	YRGG
YFCI	YNCF	YREL	YSEH
YFED	YNEJ	YRES	YSEK

This section of the SUN's catalogue includes valve assembly packages designed for specific hydraulic functions. SUN's valve assemblies typically contain two or more different cartridges and provide several hydraulic functions.

Section	Page
Valve Assemblies:	
Solenoid Operated Ventable Relief	13.02–13.13
Solenoid and Relief Pilot Flow	13.14
Cross–Port Relief with Shuttle and Solenoid Operated Vent	13.15–13.19
Hydrostatic Transmission	13.20–13.27
Hot Oil Shuttle and Relief	13.28–13.37
Flow Divider/Combiner Tractive Drive	13.38–13.41
Regeneration	13.42–13.49
Accumulator Dump Circuits	13.50–13.51
Pump Circuits Control	13.52–13.53
Pressure–Compensated Priority Flow Control	13.54–13.56

Ordering

Use a nine–digit part number when ordering valve assemblies. You must select a number of different options to complete a part number.

We have supplied pricing in Sun's most recent Price List for a basic part number that gives you a configuration that provides the required performance characteristics for the majority of applications. If you desire to change a cartridge option (controls or adjustment range) in a valve assembly, we have provided you with the cartridge page number for those cartridges where we allow option substitution.

Designated cartridge option pricing must be added to (or subtracted from) the basic pricing to obtain the complete pricing of the valve assembly. Like all other mounting configurations in this catalogue, all valve assemblies are available in both aluminium and SG iron with a variety of porting options. Consult Sun's most recent Price List for basic prices and option prices.

13

Electrical Connector Options for Solenoid Operated Assemblies

WIRE LEADS	CONDUIT	ISO/DIN
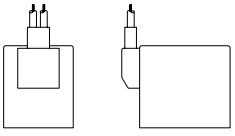	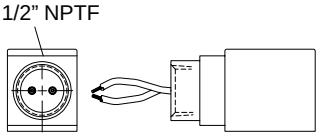	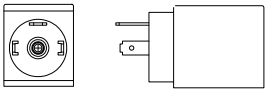
18 Gauge 0,6 meter Long	18 Gauge 0,6 meter Long	DIN 43650 Plug Face
J–12 V DC–6 metre Leads **K–24 V DC–6 metre Leads**	**N–115 V 50/60hz–Conduit** **O–230 V 50/60hz–Conduit**	**S–12 V DC ISO/DIN** **T–24 V DC ISO/DIN** **V–230 V 50/60hz ISO/DIN** **W 120 V 50/60Hz ISO/DIN**

YRC*-LAN-**

Consult the Sun Web Site for

Conversion List (Old-to-New Model Code Cross Reference)

YRO*-LAN-**

Consult the Sun Web Site for

Conversion List (Old-to-New Model Code Cross Reference)

YRE*-LAN-**

Consult the Sun Web Site for

Conversion List (Old-to-New Model Code Cross Reference)

YRP*-LAN-**

Consult the Sun Web Site for

Conversion List (Old-to-New Model Code Cross Reference)

YRF*-LAN-**

Consult the Sun Web Site for

Conversion List (Old-to-New Model Code Cross Reference)

YRF*-LAN-**

Consult the Sun Web Site for

Conversion List (Old-to-New Model Code Cross Reference)

YRQ*-LAN-**

Consult the Sun Web Site for

Conversion List (Old-to-New Model Code Cross Reference)

YRQ*-LAN-**

Consult the Sun Web Site for

Conversion List (Old-to-New Model Code Cross Reference)

YRH*-LAN-**

Consult the Sun Web Site for

Conversion List (Old-to-New Model Code Cross Reference)

YRH*-LAN-**

Consult the Sun Web Site for

Conversion List (Old-to-New Model Code Cross Reference)

YRR*-LAN-**

Consult the Sun Web Site for

Conversion List (Old-to-New Model Code Cross Reference)

YRR*-LAN-**

Consult the Sun Web Site for

Conversion List (Old-to-New Model Code Cross Reference)

YRA*-LAN-**

Consult the Sun Web Site for

Conversion List (Old-to-New Model Code Cross Reference)

CROSS–PORT RELIEF ASSEMBLY WITH SHUTTLE AND SOLENOID OPERATED VENT

- Maximum operating pressure 210 bar.
- Power requirement: 12 watts.

YVCG: Normally Open | **YVCH: Normally Closed**

ALUMINIUM		SG IRON					ALUMINIUM		SG IRON	
Port Code	*List Price*	*Port Code*	*List Price*	*Ports 1 & 2*	*Port V*	*Ports G1 & G2*	*Port Code*	*List Price*	*Port Code*	*List Price*
A		**A/S**		.25 NPTF	.25 NPTF	.25 NPTF	**A**		**A/S**	
B		**B/S**		.375 NPTF	.25 NPTF	.25 NPTF	**B**		**B/S**	
C		**C/S**		.50 NPTF	.25 NPTF	.25 NPTF	**C**		**C/S**	
D		**D/S**		.75 NPTF	.25 NPTF	.25 NPTF	**D**		**D/S**	
I		**I/S**		SAE-6	SAE-6	.25 NPTF	**I**		**I/S**	
J		**J/S**		SAE-8	SAE-6	.25 NPTF	**J**		**J/S**	
K		**K/S**		SAE-10	SAE-6	.25 NPTF	**K**		**K/S**	
L		**L/S**		SAE-12	SAE-6	.25 NPTF	**L**		**L/S**	
T		**T/S**		.25 BSPP	.25 BSPP	.25 BSPP	**T**		**T/S**	
U		**U/S**		.375 BSPP	.25 BSPP	.25 BSPP	**U**		**U/S**	
V		**V/S**		.50 BSPP	.25 BSPP	.25 BSPP	**V**		**V/S**	
W		**W/S**		.75 BSPP	.25 BSPP	.25 BSPP	**W**		**W/S**	

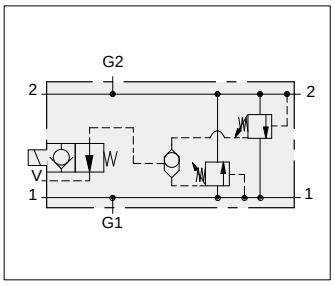

Normally Open Solenoid Valve

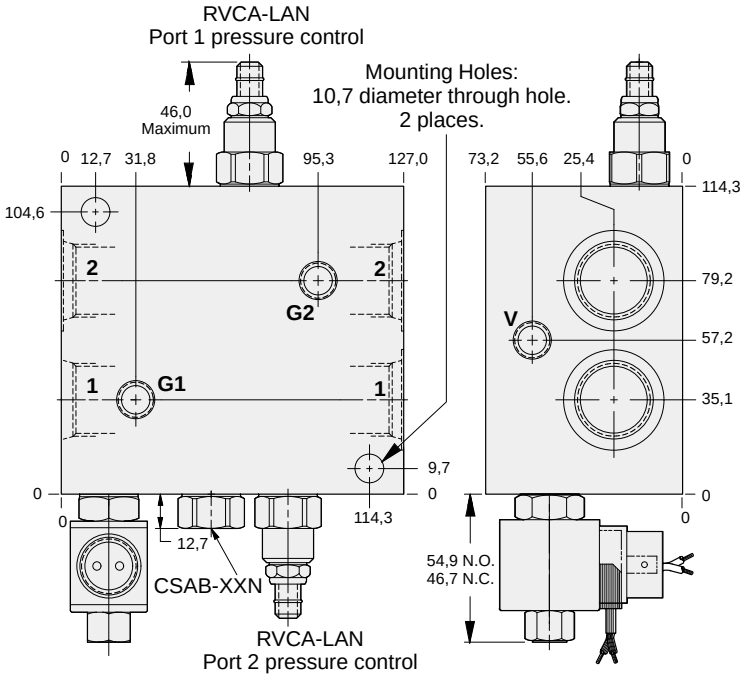

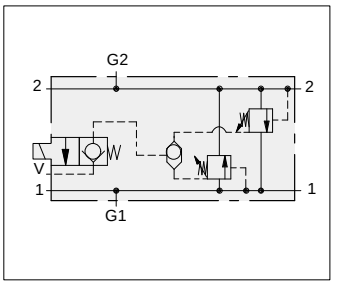

Normally Closed Solenoid Valve

13

OPTIONS

YVC * – LAN * *

G Normally Open
H Normally Closed

CARTRIDGE

RVCA Pg 1.18

For Viton Seals Change LAN to LAV.

Customer Specified Setting Stamped on Hex

SOLENOID COILS

J 12 volt DC, 0,6 metre leads
K 24 volt DC, 0,6 metre leads
N 115 volt, 50/60 H_z, conduit
O 230 volt, 50/60 H_z, conduit
S 12 volt DC, ISO/DIN
T 24 volt DC, ISO/DIN
V 230 volt, 50/60 H_z, ISO/DIN
W 120 volt, 50/60 H_z, ISO/DIN

PORTS

See Chart above

CROSS–PORT RELIEF ASSEMBLY WITH SHUTTLE AND SOLENOID OPERATED VENT

- Maximum operating pressure 210 bar.
- Power requirement: 12 watts.

YVEG: Normally Open **YVEH: Normally Closed**

ALUMINIUM		SG IRON					ALUMINIUM		SG IRON	
Port Code	*List Price*	*Port Code*	*List Price*	*Ports 1 & 2*	*Port V*	*Ports G1 & G2*	*Port Code*	*List Price*	*Port Code*	*List Price*
B		**B/S**		.375 NPTF	.25 NPTF	.25 NPTF	**B**		**B/S**	
C		**C/S**		.50 NPTF	.25 NPTF	.25 NPTF	**C**		**C/S**	
D		**D/S**		.75 NPTF	.25 NPTF	.25 NPTF	**D**		**D/S**	
E		**E/S**		1.00 NPTF	.25 NPTF	.25 NPTF	**E**		**E/S**	
I		**I/S**		SAE-6	SAE-6	.25 NPTF	**I**		**I/S**	
J		**J/S**		SAE-8	SAE-6	.25 NPTF	**J**		**J/S**	
K		**K/S**		SAE-10	SAE-6	.25 NPTF	**K**		**K/S**	
L		**L/S**		SAE-12	SAE-6	.25 NPTF	**L**		**L/S**	
M		**M/S**		SAE-16	SAE-6	.25 NPTF	**M**		**M/S**	
U		**U/S**		.375 BSPP	.25 BSPP	.25 BSPP	**U**		**U/S**	
V		**V/S**		.50 BSPP	.25 BSPP	.25 BSPP	**V**		**V/S**	
W		**W/S**		.75 BSPP	.25 BSPP	.25 BSPP	**W**		**W/S**	
X		**X/S**		1.00 BSPP	.25 BSPP	.25 BSPP	**X**		**X/S**	

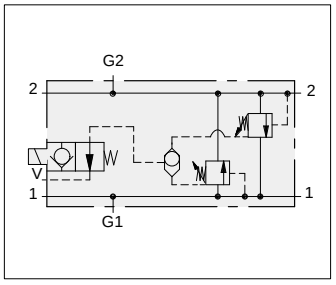

Normally Open Solenoid Valve

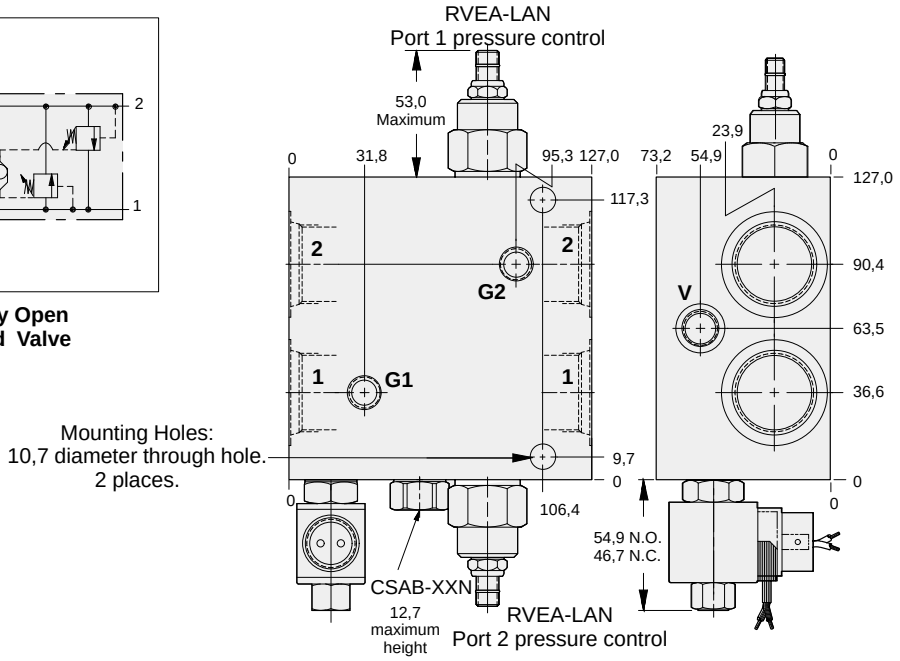

Mounting Holes:
10,7 diameter through hole.
2 places.

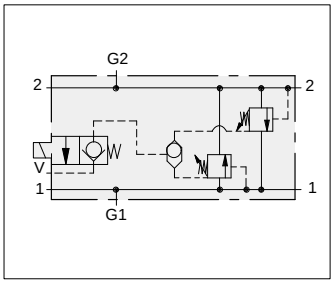

Normally Closed Solenoid Valve

13

OPTIONS

YVE * – LAN * *

G Normally Open
H Normally Closed

CARTRIDGE

RVEA Pg 1.18

For Viton Seals Change LAN to LAV.

Customer Specified Setting Stamped on Hex

SOLENOID COILS

J 12 volt DC, 0,6 metre leads
K 24 volt DC, 0,6 metre leads
N 115 volt, 50/60 H_z, conduit
O 230 volt, 50/60 H_z, conduit
S 12 volt DC, ISO/DIN
T 24 volt DC, ISO/DIN
V 230 volt, 50/60 H_z, ISO/DIN
W 120 volt, 50/60 H_z, ISO/DIN

PORTS

See Chart above

CROSS–PORT RELIEF ASSEMBLY WITH SHUTTLE AND SOLENOID OPERATED VENT

- Maximum operating pressure 210 bar.
- Power requirement: 12 watts.

YVFG: Normally Open **YVFH: Normally Closed**

ALUMINIUM		SG IRON					ALUMINIUM		SG IRON	
Port Code	*List Price*	*Port Code*	*List Price*	*Ports 1 & 2*	*Port V*	*Ports G1 & G2*	*Port Code*	*List Price*	*Port Code*	*List Price*
D		D/S		.75 NPTF	.25 NPTF	.25 NPTF	D		D/S	
E		E/S		1.00 NPTF	.25 NPTF	.25 NPTF	E		E/S	
F		F/S		1.25 NPTF	.25 NPTF	.25 NPTF	F		F/S	
L		L/S		SAE-12	SAE-6	.25 NPTF	L		L/S	
M		M/S		SAE-16	SAE-6	.25 NPTF	M		M/S	
N		N/S		SAE-20	SAE-6	.25 NPTF	N		N/S	
W		W/S		.75 BSPP	.25 BSPP	.25 BSPP	W		W/S	
X		X/S		1.00 BSPP	.25 BSPP	.25 BSPP	X		X/S	
Y		Y/S		1.25 BSPP	.25 BSPP	.25 BSPP	Y		Y/S	

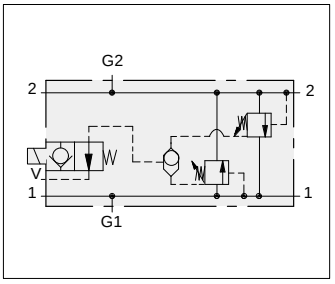

Normally Open Solenoid Valve

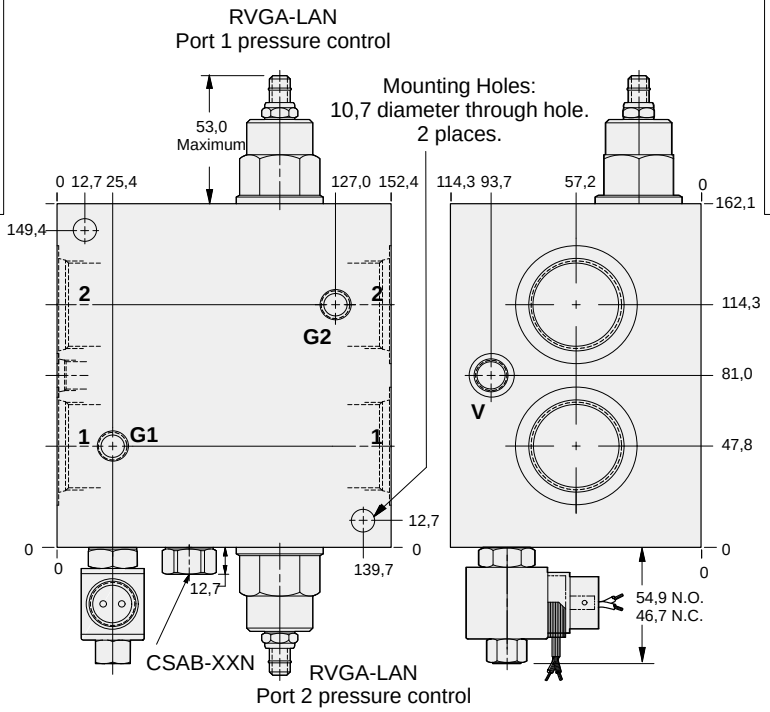

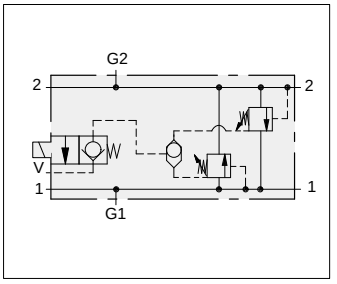

Normally Closed Solenoid Valve

OPTIONS

**YVF * – LAN **

G Normally Open

H Normally Closed

CARTRIDGE

RVGA Pg 1.19

For Viton Seals Change LAN to LAV.

Customer Specified Setting Stamped on Hex

SOLENOID COILS

J 12 volt DC, 0,6 metre leads

K 24 volt DC, 0,6 metre leads

N 115 volt, 50/60 H_z, conduit

O 230 volt, 50/60 H_z, conduit

S 12 volt DC, ISO/DIN

T 24 volt DC, ISO/DIN

V 230 volt, 50/60 H_z, ISO/DIN

W 120 volt, 50/60 H_z, ISO/DIN

PORTS

See Chart above

CROSS–PORT RELIEF ASSEMBLY
WITH SHUTTLE AND SOLENOID OPERATED VENT

- Maximum operating pressure 210 bar.
- Power requirement: 12 watts.

YVFG: Normally Open **YVFH: Normally Closed**

ALUMINIUM		SG IRON		*Mounting Hole Dimensions*	*Port V*	*Ports G1 & G2*	ALUMINIUM		SG IRON	
Port Code	*List Price*	*Port Code*	*List Price*				*Port Code*	*List Price*	*Port Code*	*List Price*
P		**P/S**		Inch	SAE-6	.25 NPTF	**P**		**P/S**	
P/M		**P/T**		Metric	.25 BSPP	.25 BSPP	**P/M**		**P/T**	

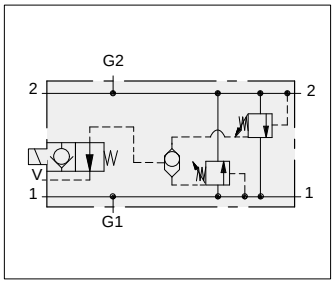

Normally Open Solenoid Valve

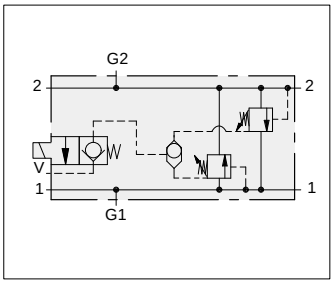

Normally Closed Solenoid Valve

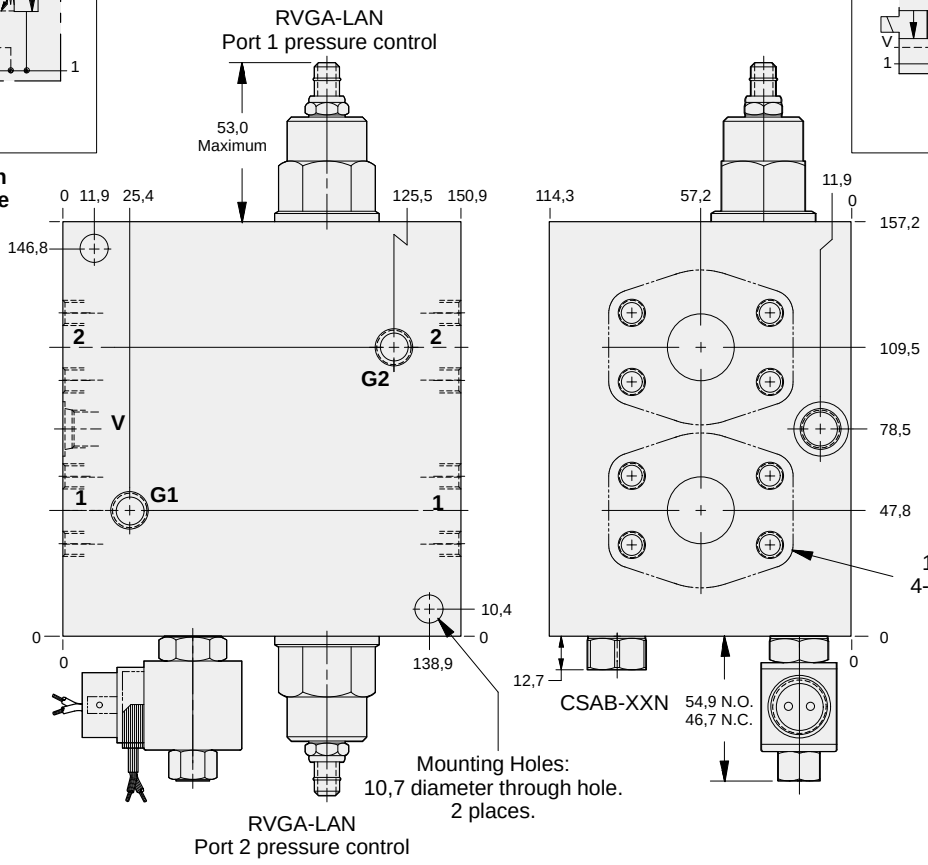

13

OPTIONS

YVF * – LAN – * *

G Normally Open
H Normally Closed

CARTRIDGE

RVGA Pg 1.19

For Viton Seals Change LAN to LAV.

Customer Specified Setting Stamped on Hex

SOLENOID COILS

J 12 volt DC, 0,6 metre leads
K 24 volt DC, 0,6 metre leads
N 115 volt, 50/60 H_z, conduit
O 230 volt, 50/60 H_z, conduit
S 12 volt DC, ISO/DIN
T 24 volt DC, ISO/DIN
V 230 volt, 50/60 H_z, ISO/DIN
W 120 volt, 50/60 H_z, ISO/DIN

PORTS

See Chart above

CROSS–PORT RELIEF ASSEMBLY WITH SHUTTLE AND SOLENOID OPERATED VENT

- Maximum operating pressure 210 bar.
- Power requirement: 12 watts.

YVFG: Normally Open **YVFH: Normally Closed**

ALUMINIUM		SG IRON		*Mounting Hole Dimensions*	*Port V*	*Ports G1 & G2*	ALUMINIUM		SG IRON	
Port Code	*List Price*	*Port Code*	*List Price*				*Port Code*	*List Price*	*Port Code*	*List Price*
Q		**Q/S**		Inch	SAE-6	.25 NPTF	**Q**		**Q/S**	
Q/M		**Q/T**		Metric	.25 BSPP	.25 BSPP	**Q/M**		**Q/T**	

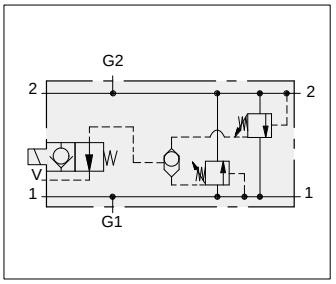

Normally Open Solenoid Valve

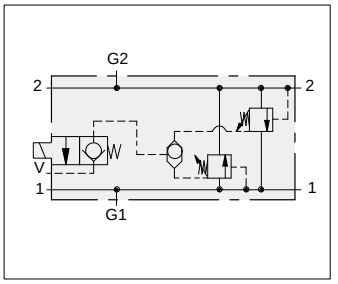

Normally Closed Solenoid Valve

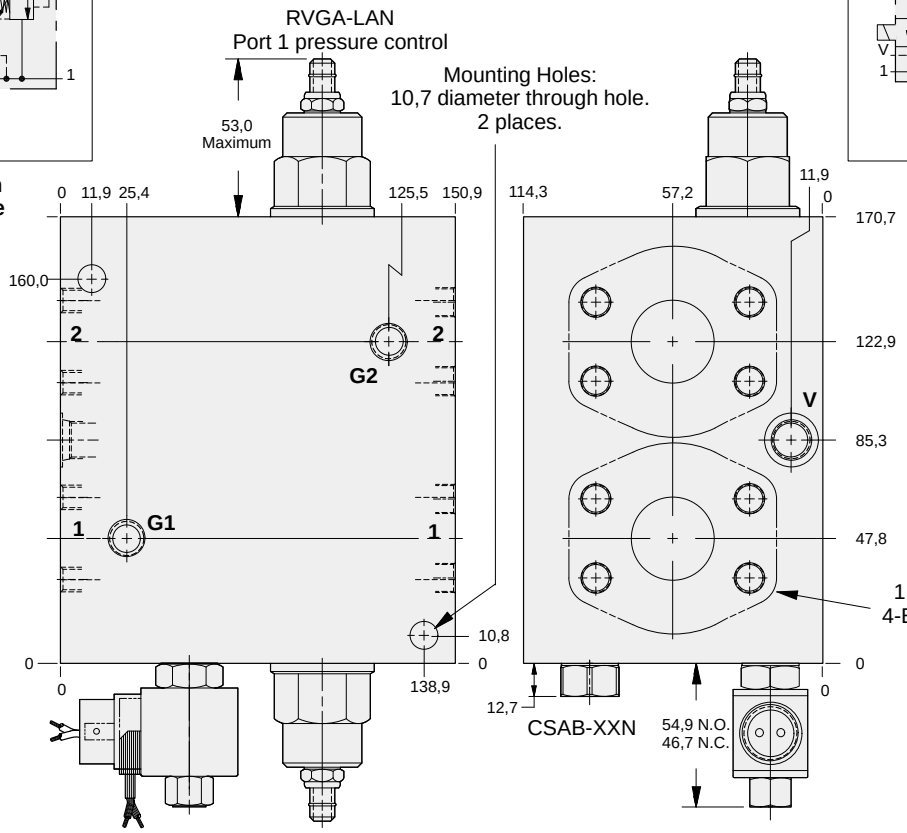

OPTIONS

YVF * – LAN – **

G Normally Open
H Normally Closed

CARTRIDGE

RVGA Pg 1.19

For Viton Seals Change LAN to LAV.

Customer Specified Setting Stamped on Hex

SOLENOID COILS

J 12 volt DC, 0,6 metre leads
K 24 volt DC, 0,6 metre leads
N 115 volt, 50/60 H_z, conduit
O 230 volt, 50/60 H_z, conduit
S 12 volt DC, ISO/DIN
T 24 volt DC, ISO/DIN
V 230 volt, 50/60 H_z, ISO/DIN
W 120 volt, 50/60 H_z, ISO/DIN

PORTS

See Chart above

HYDROSTATIC TRANSMISSION ASSEMBLY
INLINE BODY

- Aluminium rated to 210 bar and SG Iron rated to 350 bar.
- Hot oil pressure can be confirmed and/or set with transmission in neutral.

These SUN valve assemblies are for use with hydrostatic transmissions to provide overload relief valve protection for the main circuit in both directions. Additionally, an auxiliary shuttle valve allows bleed-off of hot oil from the low pressure side. Hot oil can be cooled, filtered, or used as a source of oil for flushing other pump and motor cases. Hot oil is removed from the loop when the SUN RPEC cartridge is set below the hydrostatic charge pressure relief valve.

NOTE: A mechanical brake is recommended to positively lock any stopped live load.

Mounting Hole Dimensions	*Ports 1 & 2*	*Port T*	*Ports G1, G2, & G3*	**ALUMINIUM**		**SG IRON**	
				Port Code	*List Price*	*Port Code*	*List Price*
Inch	SAE-12	SAE-8	.25 NPTF	**L**		**L/S**	
Metric	.75 BSPP	.375 BSPP	.25 BSPP	**W**		**W/S**	

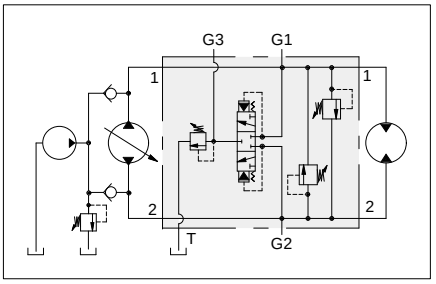

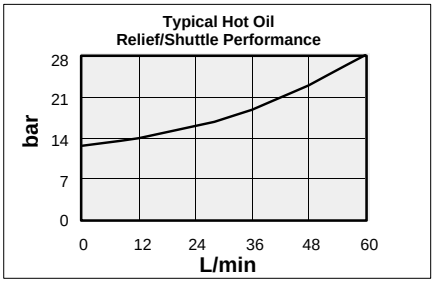

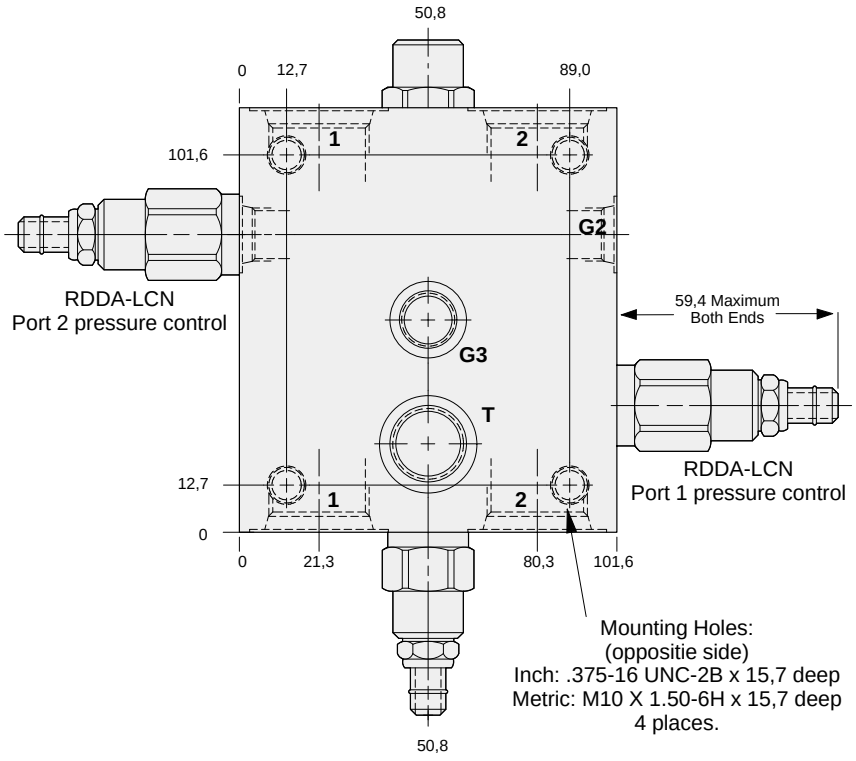

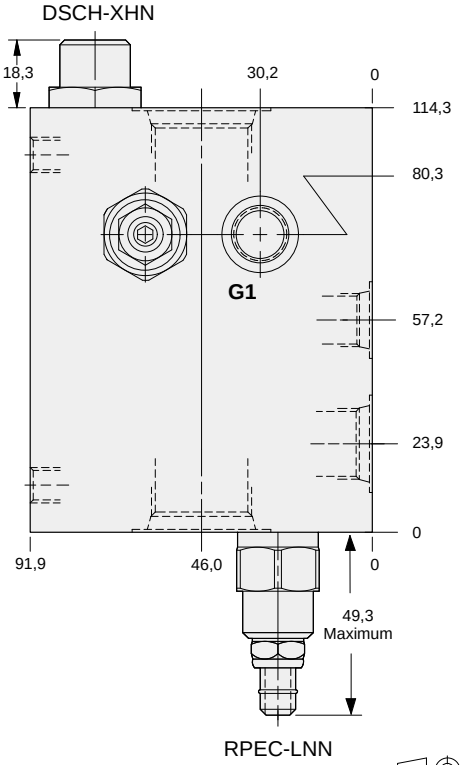

OPTIONS

XRDB – LCN – A*

CARTRIDGE
RDDA Pg 1.10
For Viton Seals Change LCN to LCV.

Customer Specified Setting
Stamped on Hex

PORTS
See Chart above

13

HYDROSTATIC TRANSMISSION ASSEMBLY
.75” SAE FLANGE PORT BODY

- Aluminium rated to 210 bar and SG Iron rated to 350 bar.
- Hot oil pressure can be confirmed and/or set with transmission in neutral.

Mounting Hole Dimensions	*Ports 1 & 2*	*Port T*	*Ports G1, G2, & G3*	**ALUMINIUM**		**SG IRON**	
				Port Code	*List Price*	*Port Code*	*List Price*
Inch	Code 61	SAE-8	SAE-6	**O**		**O/S**	
Metric	Code 61	.375 BSPP	.25 BSPP	**O/M**		**O/T**	

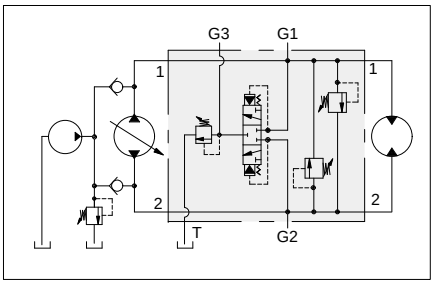

These SUN valve assemblies are for use with hydrostatic transmissions to provide overload relief valve protection for the main circuit in both directions. Additionally, an auxiliary shuttle valve allows bleed-off of hot oil from the low pressure side. Hot oil can be cooled, filtered, or used as a source of oil for flushing other pump and motor cases. Hot oil is removed from the loop when the SUN RPEC cartridge is set below the hydrostatic charge pressure relief valve.

NOTE: A mechanical brake is recommended to positively lock any stopped live load.

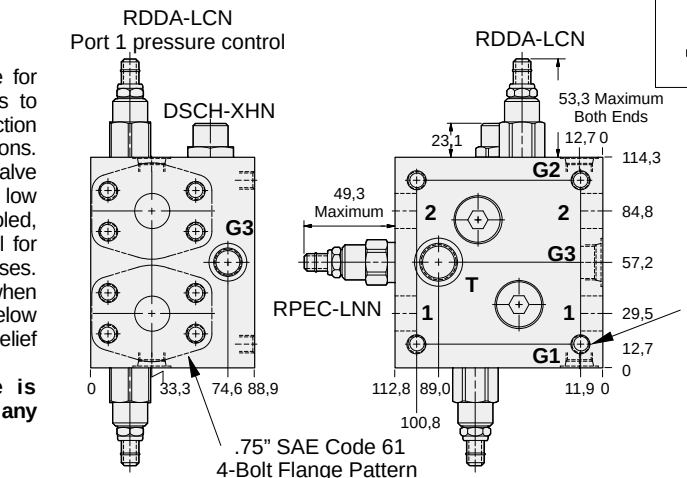

Mounting Holes:
(opposite side)
Inch: .375-16 UNC-2B x 19,0 deep
Metric: M10 X 1.50-6H x 19,0 deep
4 places.

Mounting Hole Dimensions	*Ports 1 & 2*	*Port T*	*Ports G1, G2, & G3*	**ALUMINIUM**		**SG IRON**	
				Port Code	*List Price*	*Port Code*	*List Price*
Inch	Code 62	SAE-8	SAE-6	**3**		**3/S**	
Metric	Code 62	.375 BSPP	.25 BSPP	**3/M**		**3/T**	

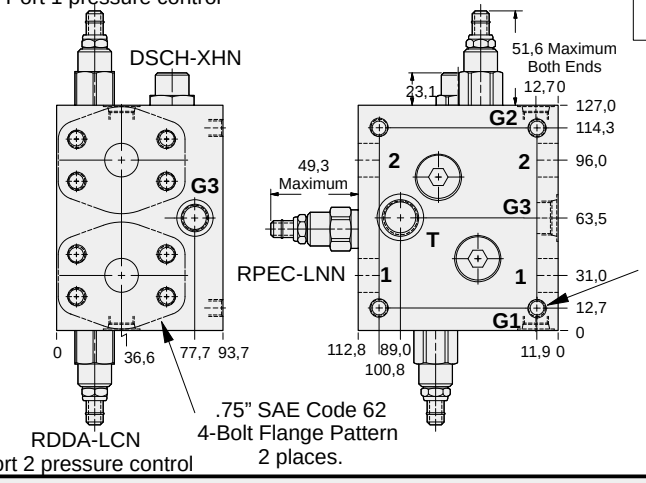

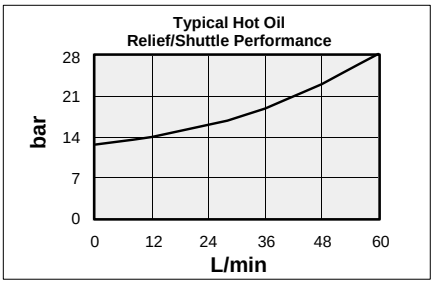

Mounting Holes:
(opposite side)
Inch: .375-16 UNC-2B x 19,0 deep
Metric: M10 X 1.50-6H x 19,0 deep
4 places.

13

OPTIONS

XRDB – LCN – A*

CARTRIDGE
RDDA Pg 1.10
For Viton Seals Change LCN to LCV.

Customer Specified Setting
Stamped on Hex

PORTS
See Chart above

HYDROSTATIC TRANSMISSION ASSEMBLY
INLINE BODY

- Aluminium rated to 210 bar and SG Iron rated to 350 bar.
- Hot oil pressure can be confirmed and/or set with transmission in neutral.

These SUN valve assemblies are for use with hydrostatic transmissions to provide overload relief valve protection for the main circuit in both directions. Additionally, an auxiliary shuttle valve allows bleed-off of hot oil from the low pressure side. Hot oil can be cooled, filtered, or used as a source of oil for flushing other pump and motor cases. Hot oil is removed from the loop when the SUN RPEC cartridge is set below the hydrostatic charge pressure relief valve.
NOTE: A mechanical brake is recommended to positively lock any stopped live load.

Mounting Hole Dimensions	*Ports 1 & 2*	*Port T*	*Ports G1, G2, & G3*	ALUMINIUM		SG IRON	
				Port Code	*List Price*	*Port Code*	*List Price*
Inch	SAE-16	SAE-10	SAE-6	**M**		**M/S**	
Metric	1.00 BSPP	.50 BSPP	.25 BSPP	**X**		**X/S**	

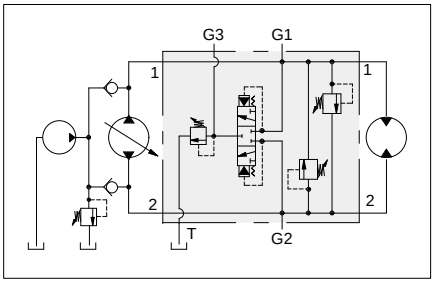

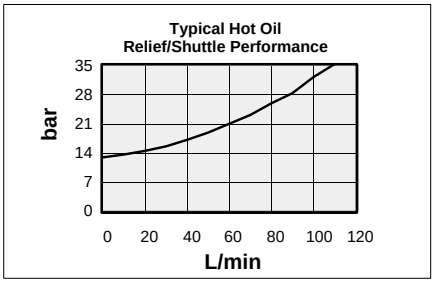

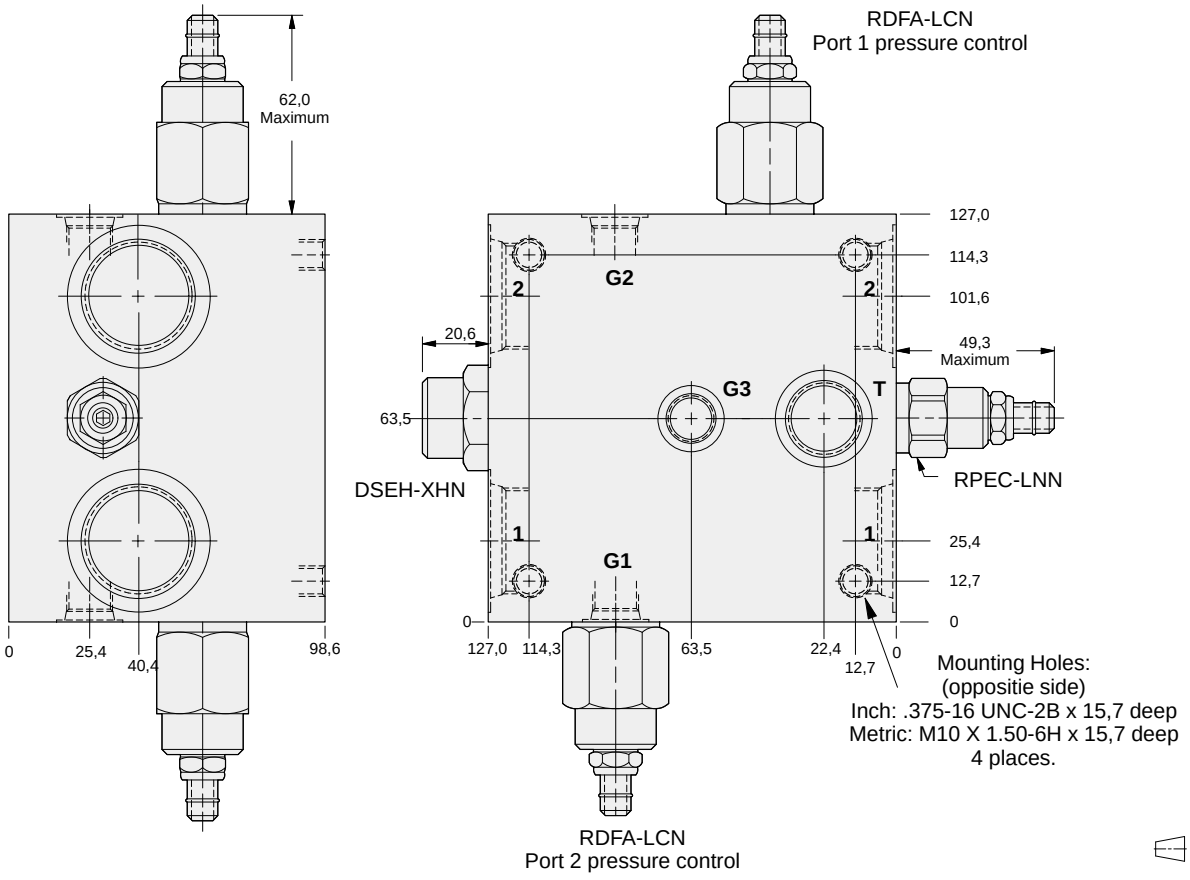

13

OPTIONS

XRFB – LCN – A*

CARTRIDGE
RDFA Pg 1.10
For Viton Seals Change LCN to LCV.

Customer Specified Setting
Stamped on Hex

PORTS
See Chart above

HYDROSTATIC TRANSMISSION ASSEMBLY
1.00” SAE FLANGE PORT BODY

- Aluminium rated to 210 bar and SG Iron rated to 350 bar.
- Hot oil pressure can be confirmed and/or set with transmission in neutral.

Mounting Hole Dimensions	*Ports 1 & 2*	*Port T*	*Ports G1, G2, & G3*	ALUMINIUM		SG IRON	
				Port Code	*List Price*	*Port Code*	*List Price*
Inch	Code 61	SAE-10	SAE-6	**P**		**P/S**	
Metric	Code 61	.50 BSPP	.25 BSPP	**P/M**		**P/T**	

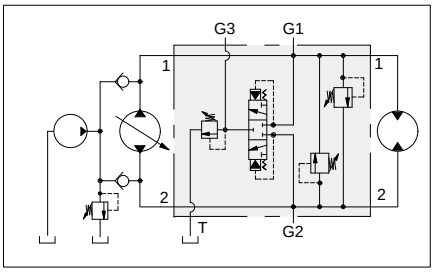

These SUN valve assemblies are for use with hydrostatic transmissions to provide overload relief valve protection for the main circuit in both directions. Additionally, an auxiliary shuttle valve allows bleed-off of hot oil from the low pressure side. Hot oil can be cooled, filtered, or used as a source of oil for flushing other pump and motor cases. Hot oil is removed from the loop when the SUN RPEC cartridge is set below the hydrostatic charge pressure relief valve.
NOTE: A mechanical brake is recommended to positively lock any stopped live load.

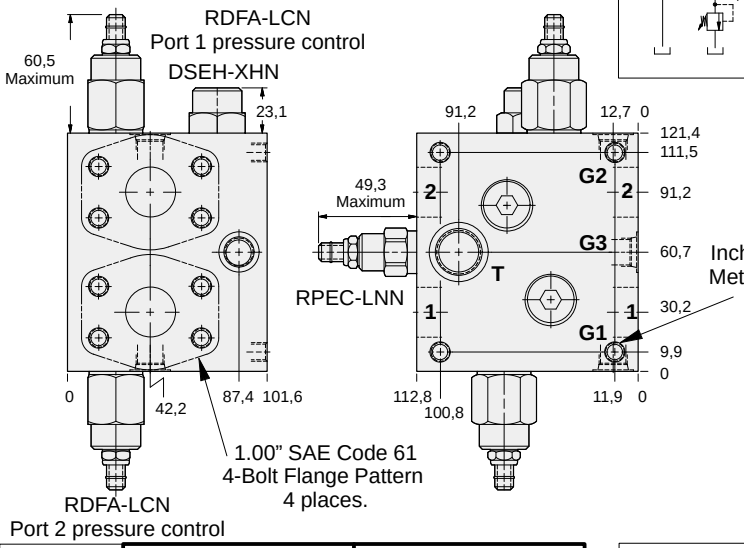

Mounting Holes:
(opposite side)
Inch: .375-16 UNC-2B x 19,0 deep
Metric: M10 X 1.50-6H x 19,0 deep
4 places.

Mounting Hole Dimensions	*Ports 1 & 2*	*Port T*	*Ports G1, G2, & G3*	ALUMINIUM		SG IRON	
				Port Code	*List Price*	*Port Code*	*List Price*
Inch	Code 62	SAE-10	SAE-6	**4**		**4/S**	
Metric	Code 62	.50 BSPP	.25 BSPP	**4/M**		**4/T**	

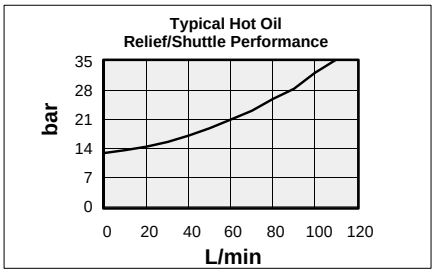

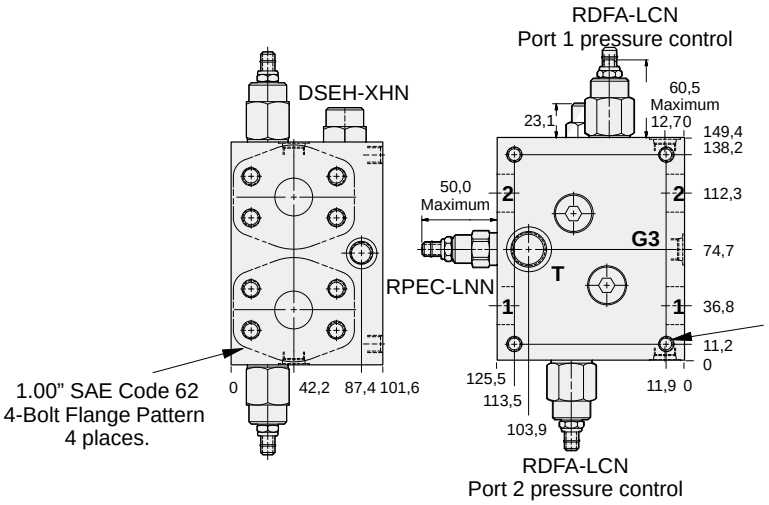

Mounting Holes:
(opposite side)
Inch: .438-14 UNC-2B x 26,9 deep
Metric: M12 x 1.75-6H x 26,9 deep
4 places.

OPTIONS

XRFB – LCN – A*

CARTRIDGE
RDFA Pg 1.10
For Viton Seals Change LCN to LCV.

Customer Specified Setting
Stamped on Hex

PORTS
See Chart above

HYDROSTATIC TRANSMISSION ASSEMBLY
1.25” SAE CODE 61 FLANGE PORT BODY

- Aluminium rated to 210 bar and SG Iron rated to 350 bar.
- Hot oil pressure can be confirmed and/or set with transmission in neutral.

These SUN valve assemblies are for use with hydrostatic transmissions to provide overload relief valve protection for the main circuit in both directions. Additionally, an auxiliary shuttle valve allows bleed-off of hot oil from the low pressure side. Hot oil can be cooled, filtered, or used as a source of oil for flushing other pump and motor cases. Hot oil is removed from the loop when the SUN RPGC cartridge is set below the hydrostatic charge pressure relief valve.
NOTE: A mechanical brake is recommended to positively lock any stopped live load.

Mounting Hole Dimensions	*Port T*	*Ports G1, G2, & G3*	ALUMINIUM		SG IRON	
			Port Code	*List Price*	*Port Code*	*List Price*
Inch	SAE-12	SAE-6	**Q**		**Q/S**	
Metric	.75 BSPP	.25 BSPP	**Q/M**		**Q/T**	

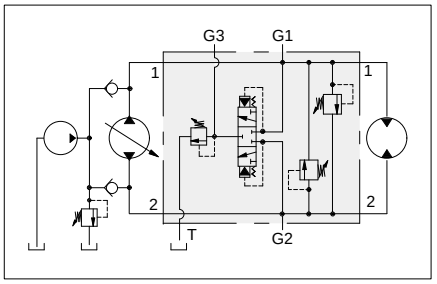

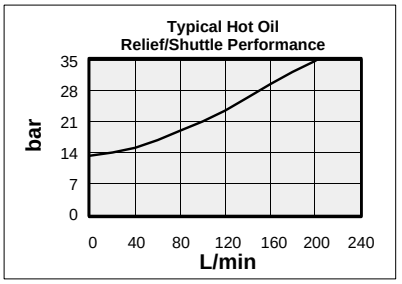

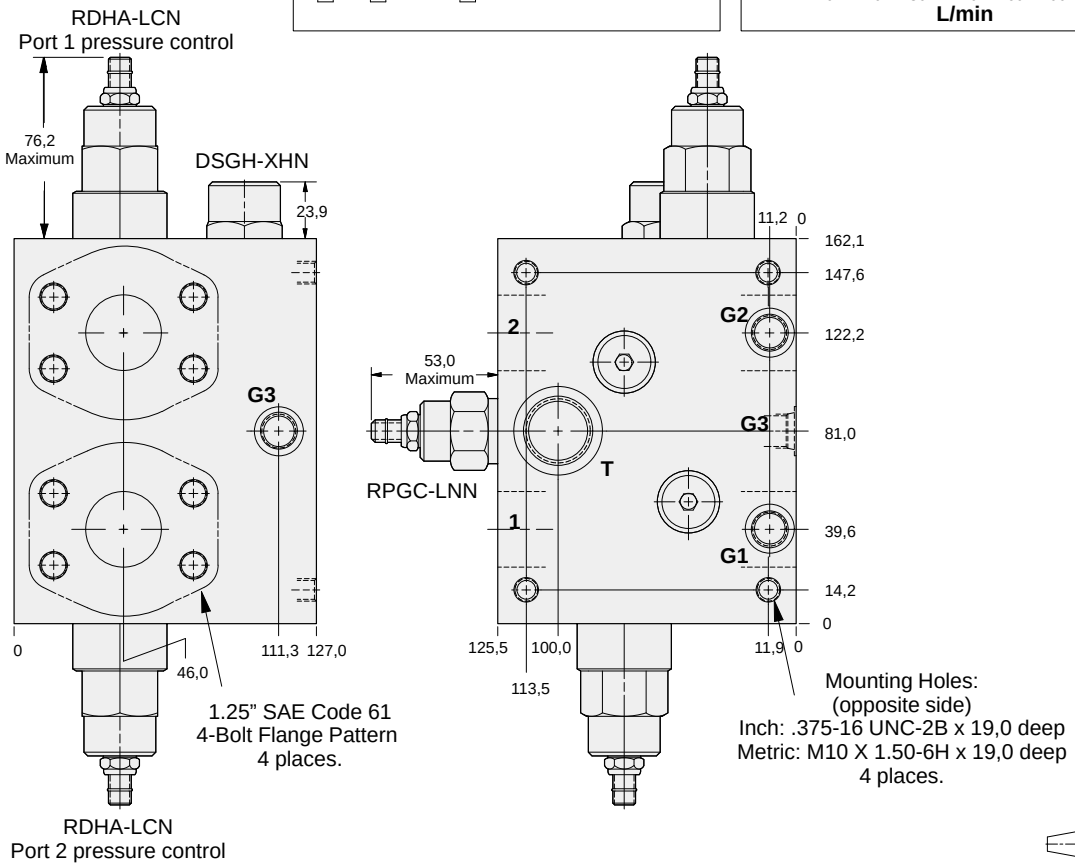

13

OPTIONS

XRHB – LCN – A*

CARTRIDGE

RDHA Pg 1.11
For Viton Seals Change LCN to LCV.

Customer Specified Setting
Stamped on Hex

PORTS

See Chart above

HYDROSTATIC TRANSMISSION ASSEMBLY
1.25” SAE CODE 62 FLANGE PORT BODY

- Aluminium rated to 210 bar and SG Iron rated to 350 bar.
- Hot oil pressure can be confirmed and/or set with transmission in neutral.

These SUN valve assemblies are for use with hydrostatic transmissions to provide overload relief valve protection for the main circuit in both directions. Additionally, an auxiliary shuttle valve allows bleed-off of hot oil from the low pressure side. Hot oil can be cooled, filtered, or used as a source of oil for flushing other pump and motor cases. Hot oil is removed from the loop when the SUN RPGC cartridge is set below the hydrostatic charge pressure relief valve.
NOTE: A mechanical brake is recommended to positively lock any stopped live load.

Mounting Hole Dimensions	*Port T*	*Ports G1, G2, & G3*	ALUMINIUM		SG IRON	
			Port Code	*List Price*	*Port Code*	*List Price*
Inch	SAE-12	SAE-6	**5**		**5/S**	
Metric	.75 BSPP	.25 BSPP	**5/M**		**5/T**	

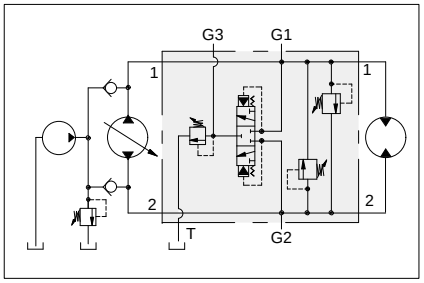

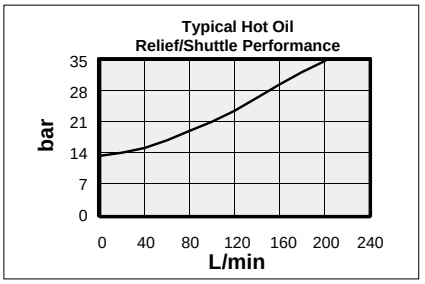

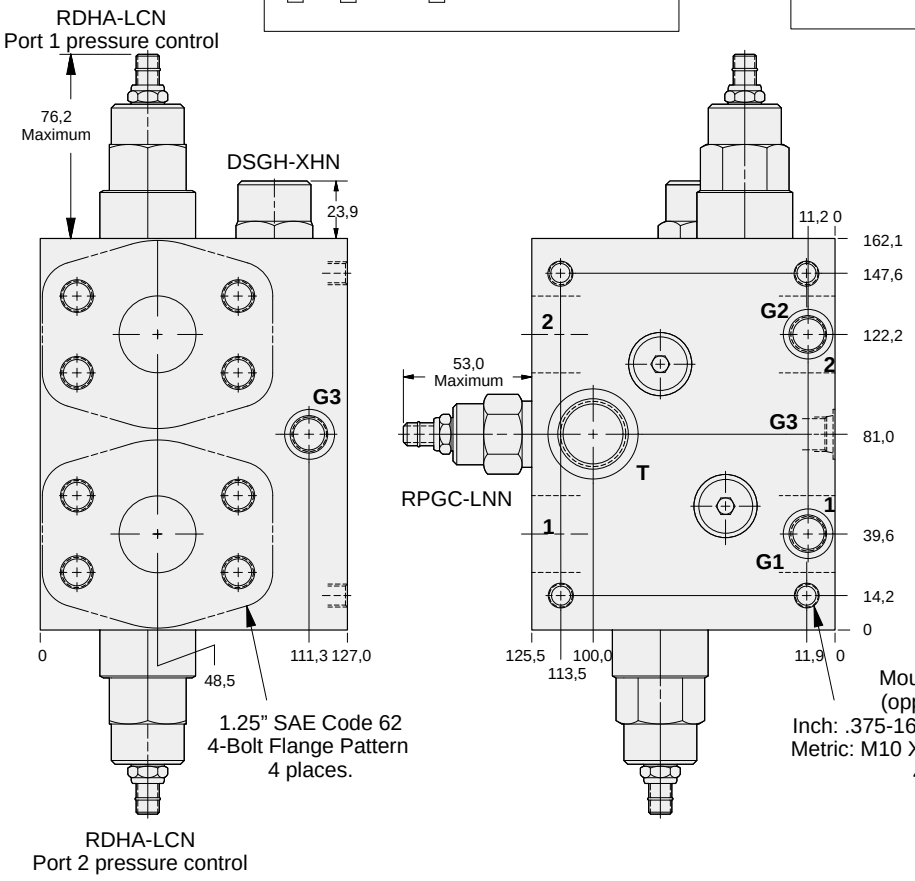

13

OPTIONS

XRHB – LCN – A*

CARTRIDGE

RDHA Pg 1.11
For Viton Seals Change LCN to LCV.

Customer Specified Setting
Stamped on Hex

PORTS

See Chart above

HYDROSTATIC TRANSMISSION ASSEMBLY
1.50” SAE FLANGE PORT BODY

- Aluminium rated to 210 bar and SG Iron rated to 350 bar.
- Hot oil pressure can be confirmed and/or set with transmission in neutral.

Mounting Hole Dimensions	*Ports 1 & 2*	*Port T*	*Ports G1, G2, & G3*	ALUMINIUM		SG IRON	
				Port Code	*List Price*	*Port Code*	*List Price*
Inch	Code 61	SAE-16	SAE-6	**R**		**R/S**	
Metric	Code 61	1.00 BSPP	.25 BSPP	**R/M**		**R/T**	

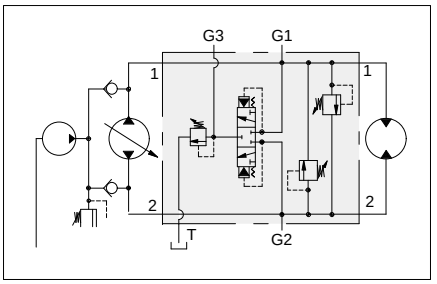

These SUN valve assemblies are for use with hydrostatic transmissions to provide overload relief valve protection for the main circuit in both directions. Additionally, an auxiliary shuttle valve allows bleed-off of hot oil from the low pressure side. Hot oil can be cooled, filtered, or used as a source of oil for flushing other pump and motor cases. Hot oil is removed from the loop when the SUN RPIC cartridge is set below the hydrostatic charge pressure relief valve.
NOTE: A mechanical brake is recommended to positively lock any stopped live load.

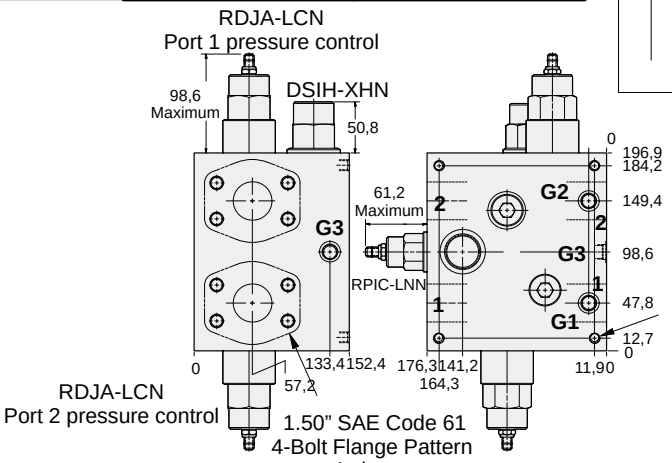

Mounting Holes:
(opposite side)
Inch: .375-16 UNC-2B x 22,4 deep
Metric: M10 X 1.50-6H x 22,4 deep
4 places.

Mounting Hole Dimensions	*Ports 1 & 2*	*Port T*	*Ports G1, G2, & G3*	ALUMINIUM		SG IRON	
				Port Code	*List Price*	*Port Code*	*List Price*
Inch	Code 62	SAE-16	SAE-6	**6**		**6/S**	
Metric	Code 62	1.00 BSPP	.25 BSPP	**6/M**		**6/T**	

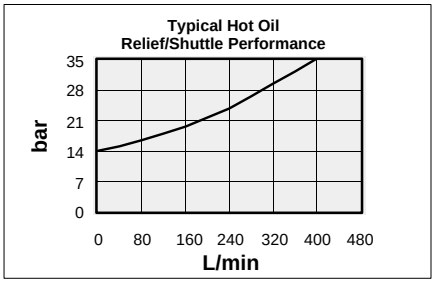

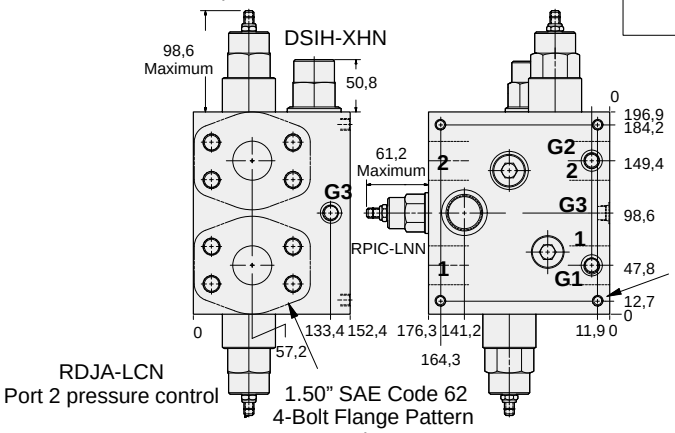

Mounting Holes:
(opposite side)
Inch: .375-16 UNC-2B x 22,4 deep
Metric: M10 X 1.50-6H x 22,4 deep
4 places.

OPTIONS

XRJB – LCN – A*

CARTRIDGE
RDJA Pg 1.11
For Viton Seals Change LCN to LCV.

Customer Specified Setting
Stamped on Hex

PORTS
See Chart above

HYDROSTATIC TRANSMISSION ASSEMBLY
2.00” SAE FLANGE PORT BODY

- Aluminium rated to 210 bar and SG Iron rated to 350 bar.
- Hot oil pressure can be confirmed and/or set with transmission in neutral.

Mounting Hole Dimensions	*Ports 1 & 2*	*Port T*	*Ports G1, G2, & G3*	ALUMINIUM		SG IRON	
				Port Code	*List Price*	*Port Code*	*List Price*
Inch	Code 61	SAE-16	SAE-6	**S**		**S/S**	
Metric	Code 61	1.00 BSPP	.25 BSPP	**S/M**		**S/T**	

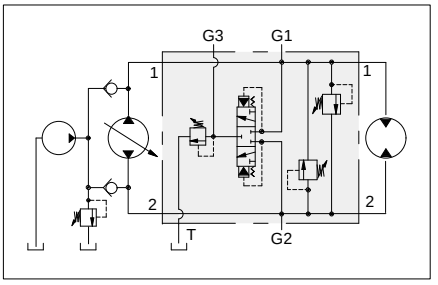

These SUN valve assemblies are for use with hydrostatic transmissions to provide overload relief valve protection for the main circuit in both directions. Additionally, an auxiliary shuttle valve allows bleed-off of hot oil from the low pressure side. Hot oil can be cooled, filtered, or used as a source of oil for flushing other pump and motor cases. Hot oil is removed from the loop when the SUN RPIC cartridge is set below the hydrostatic charge pressure relief valve.
NOTE: A mechanical brake is recommended to positively lock any stopped live load.

RDJA-LCN
Port 1 Pressure Control

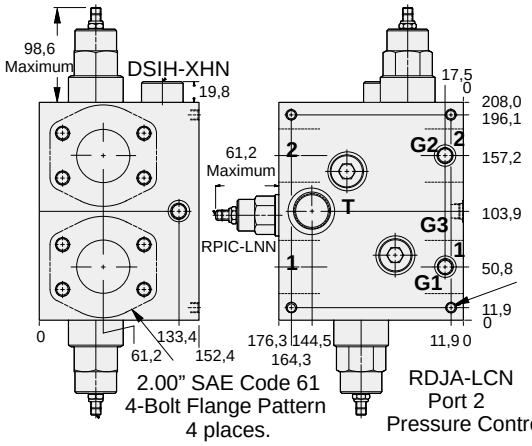

2.00” SAE Code 61
4-Bolt Flange Pattern
4 places.

RDJA-LCN
Port 2
Pressure Control

Mounting Holes:
(opposite side)
Inch: .375-16 UNC-2B x 22,4 deep
Metric: M10 X 1.50-6H x 22,4 deep
4 places.

Mounting Hole Dimensions	*Ports 1 & 2*	*Port T*	*Ports G1, G2, & G3*	ALUMINIUM		SG IRON	
				Port Code	*List Price*	*Port Code*	*List Price*
Inch	Code 62	SAE-16	SAE-6	**8**		**8/S**	
Metric	Code 62	1.00 BSPP	.25 BSPP	**8/M**		**8/T**	

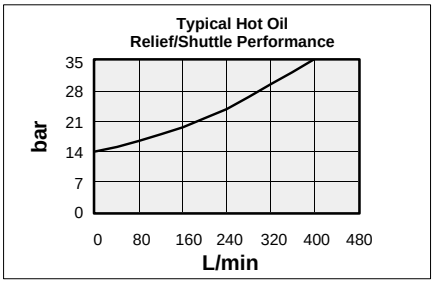

RDJA-LCN
Port 1 Pressure Control

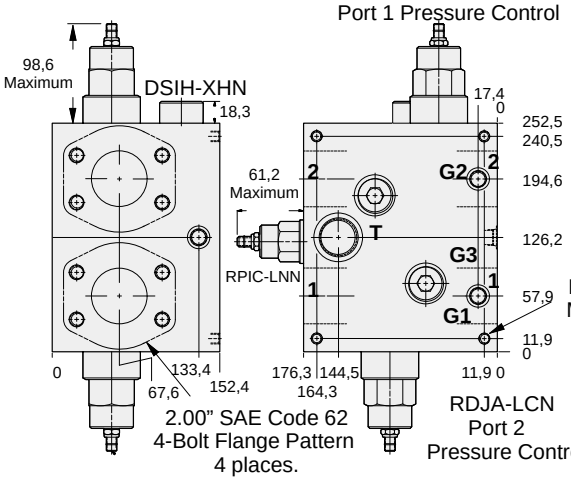

2.00” SAE Code 62
4-Bolt Flange Pattern
4 places.

RDJA-LCN
Port 2
Pressure Control

Mounting Holes:
(opposite side)
Inch: .375-16 UNC-2B x 22,4 deep
Metric: M10 X 1.50-6H x 22,4 deep
4 places.

13

OPTIONS

XRJB – LCN – A*

CARTRIDGE

RDJA Pg 1.11
For Viton Seals Change LCN to LCV.

Customer Specified Setting
Stamped on Hex

PORTS

See Chart above

HOT OIL SHUTTLE AND RELIEF ASSEMBLY
INLINE BODY

- Aluminium rated to 210 bar and SG Iron rated to 350 bar.
- Hot oil pressure can be confirmed and/or set with transmission in neutral.

These SUN valve assemblies are for use in bleed-off of hot oil from the low pressure side of a hydrostatic transmission circuit. The hot oil can be cooled, filtered, or used as a source of oil for flushing other pump and motor cases. The hot oil is removed from the loop when the SUN RPEC cartridge is set below the hydrostatic charge pressure relief valve.

Mounting Hole Dimensions	*Ports 1 & 2*	*Port T*	*Gauge Port*	ALUMINIUM		SG IRON	
				Port Code	*List Price*	*Port Code*	*List Price*
Inch	SAE-10	SAE-8	SAE-6	**K**		**K/S**	
Inch	SAE-12	SAE-8	SAE-6	**L**		**L/S**	
Metric	.50 BSPP	.375 BSPP	.25 BSPP	**V**		**V/S**	
Metric	.75 BSPP	.375 BSPP	.25 BSPP	**W**		**W/S**	

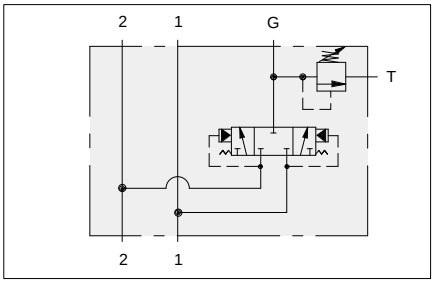

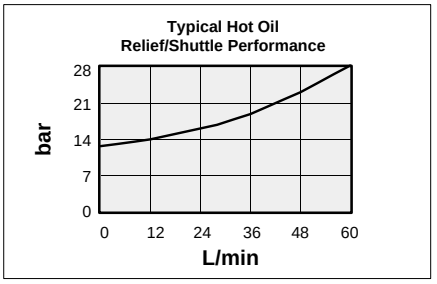

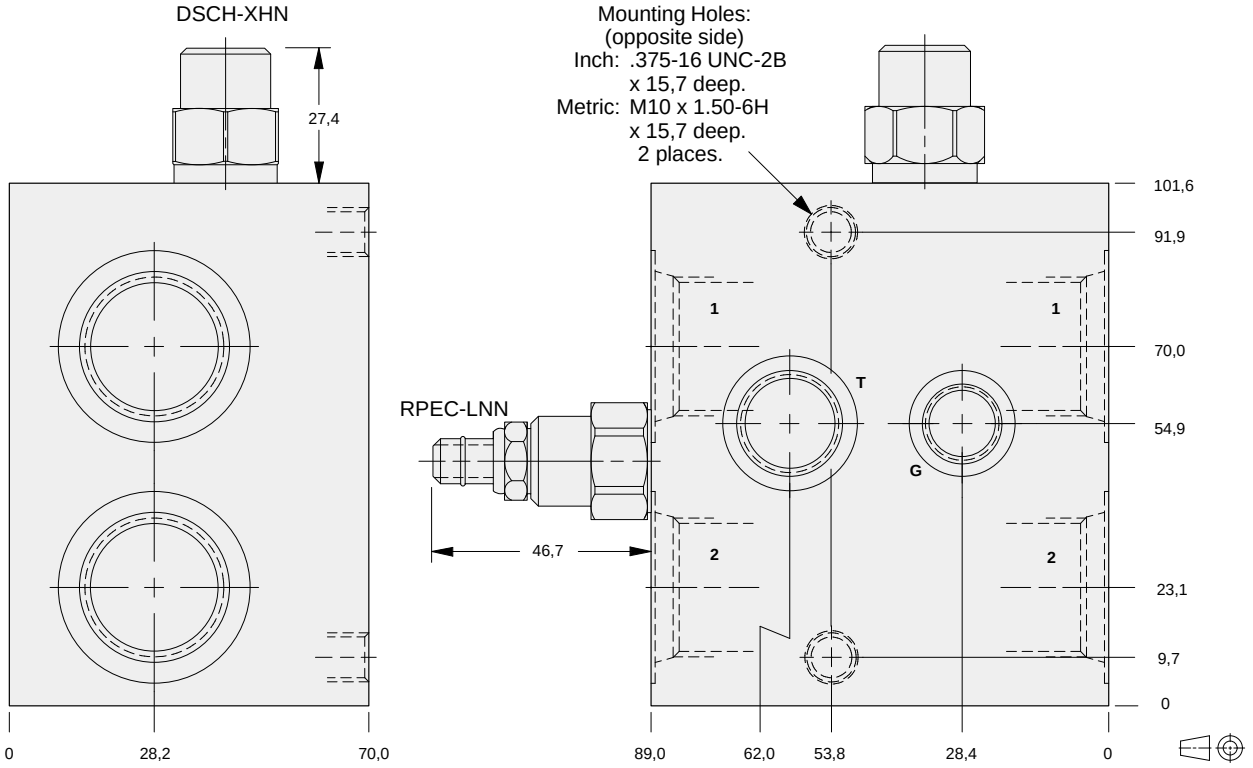

OPTIONS

XRDC – LNN – A*

CARTRIDGE

RPEC Pg 1.11

For Viton Seals Change LNN to LNV.

Customer Specified Setting Stamped on Hex

PORTS

See Chart above

HOT OIL SHUTTLE AND RELIEF ASSEMBLY
.75” SAE FLANGE PORT BODY

- Aluminium rated to 210 bar and SG Iron rated to 350 bar.
- Hot oil pressure can be confirmed and/or set with transmission in neutral.

Mounting Hole Dimensions	*Ports 1 & 2*	*Port T*	*Gauge Port*	ALUMINIUM		SG IRON	
				Port Code	*List Price*	*Port Code*	*List Price*
Inch	Code 61	SAE-8	SAE-6	**O**		**O/S**	
Metric	Code 61	.375 BSPP	.25 BSPP	**O/M**		**O/T**	

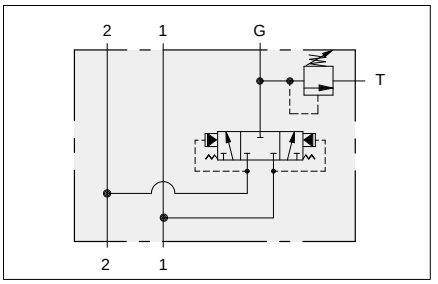

These SUN valve assemblies are for use in bleed-off of hot oil from the low pressure side of a hydrostatic transmission circuit. The hot oil can be cooled, filtered, or used as a source of oil for flushing other pump and motor cases. The hot oil is removed from the loop when the SUN RPEC cartridge is set below the hydrostatic charge pressure relief valve.

.75” SAE Code 61
4-Bolt Flange Pattern
4 places.

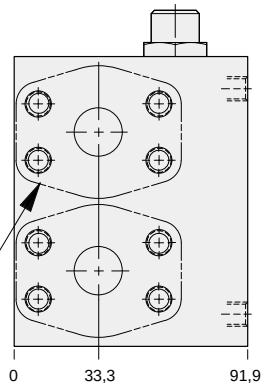

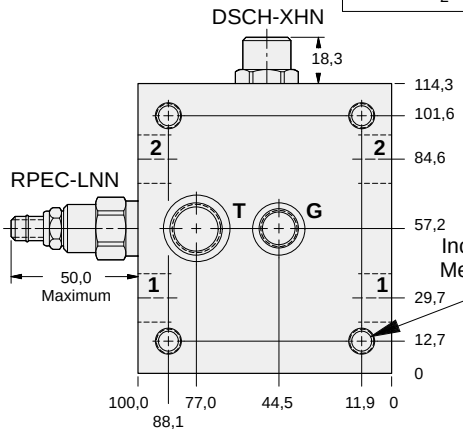

Mounting Holes:
(oppositie side)
Inch: .375-16 UNC-2B x 15,7 deep
Metric: M10 X 1.50-6H x 15,7 deep
4 places.

Mounting Hole Dimensions	*Ports 1 & 2*	*Port T*	*Gauge Port*	ALUMINIUM		SG IRON	
				Port Code	*List Price*	*Port Code*	*List Price*
Inch	Code 62	SAE-8	SAE-6	**3**		**3/S**	
Metric	Code 62	.375 BSPP	.25 BSPP	**3/M**		**3/T**	

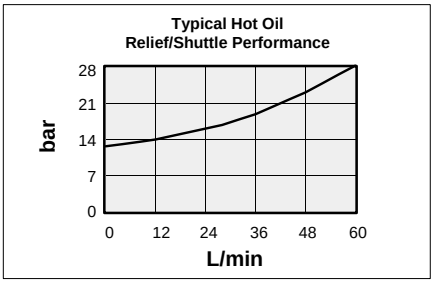

.75” SAE Code 62
4-Bolt Flange Pattern
4 places.

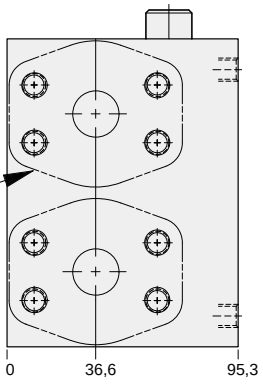

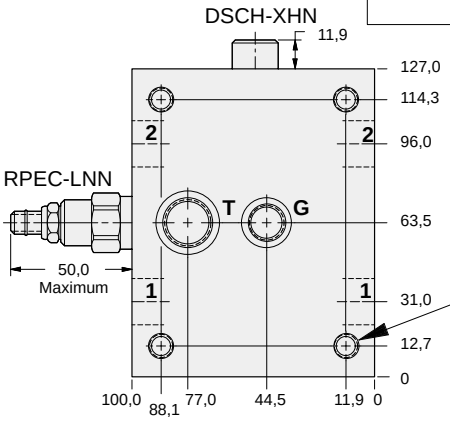

Mounting Holes:
(oppositie side)
Inch: .375-16 UNC-2B x 15,7 deep
Metric: M10 X 1.50-6H x 15,7 deep
4 places.

OPTIONS

XRDC − LNN − A*

CARTRIDGE

RPEC Pg 1.06
For Viton Seals Change LNN to LNV.

Customer Specified Setting
Stamped on Hex

PORTS

See Chart above

HOT OIL SHUTTLE AND RELIEF ASSEMBLY
INLINE BODY

- Aluminium rated to 210 bar and SG Iron rated to 350 bar.
- Hot oil pressure can be confirmed and/or set with transmission in neutral.

These SUN valve assemblies are for use in bleed-off of hot oil from the low pressure side of a hydrostatic transmission circuit. The hot oil can be cooled, filtered, or used as a source of oil for flushing other pump and motor cases. The hot oil is removed from the loop when the SUN RPEC cartridge is set below the hydrostatic charge pressure relief valve.

Mounting Hole Dimensions	*Ports 1 & 2*	*Port T*	*Gauge Port*	ALUMINIUM		SG IRON	
				Port Code	*List Price*	*Port Code*	*List Price*
Inch	SAE-12	SAE-10	SAE-6	**L**		**L/S**	
Inch	SAE-16	SAE-10	SAE-6	**M**		**M/S**	
Metric	.75 BSPP	.50 BSPP	.25 BSPP	**W**		**W/S**	
Metric	1.00 BSPP	.50 BSPP	.25 BSPP	**X**		**X/S**	

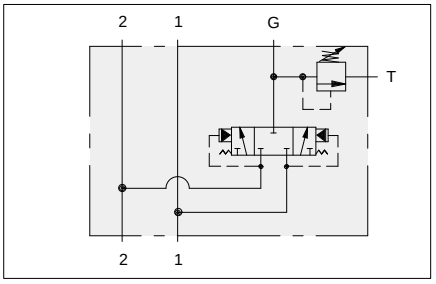

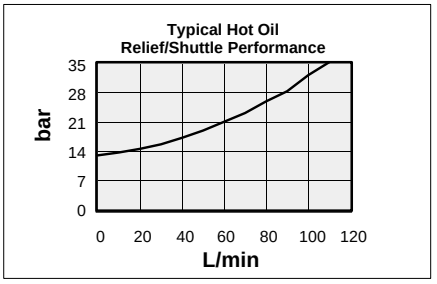

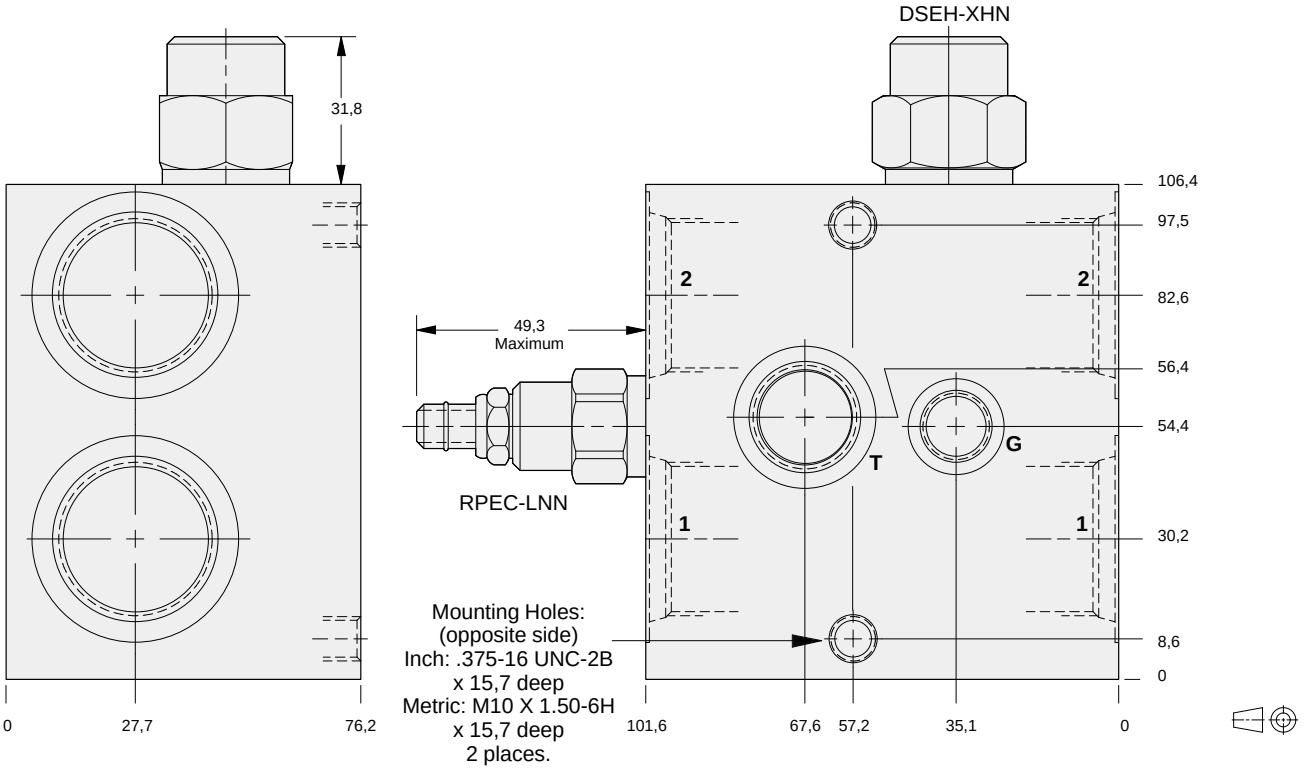

13

OPTIONS

XRFC – LNN A*

CARTRIDGE

RPEC Pg 1.06
For Viton Seals Change LNN to LNV.

Customer Specified Setting
Stamped on Hex

PORTS

See Chart above

HOT OIL SHUTTLE AND RELIEF ASSEMBLY
1.00” SAE FLANGE PORT BODY

- Aluminium rated to 210 bar and SG Iron rated to 350 bar.
- Hot oil pressure can be confirmed and/or set with transmission in neutral.

Mounting Hole Dimensions	*Ports 1 & 2*	*Port T*	*Gauge Port*	ALUMINIUM		SG IRON	
				Port Code	*List Price*	*Port Code*	*List Price*
Inch	Code 61	SAE-10	SAE-6	**P**		**P/S**	
Metric	Code 61	.50 BSPP	.25 BSPP	**P/M**		**P/T**	

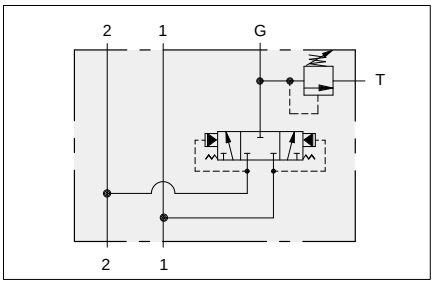

These SUN valve assemblies are for use in bleed-off of hot oil from the low pressure side of a hydrostatic transmission circuit. The hot oil can be cooled, filtered, or used as a source of oil for flushing other pump and motor cases. The hot oil is removed from the loop when the SUN RPEC cartridge is set below the hydrostatic charge pressure relief valve.

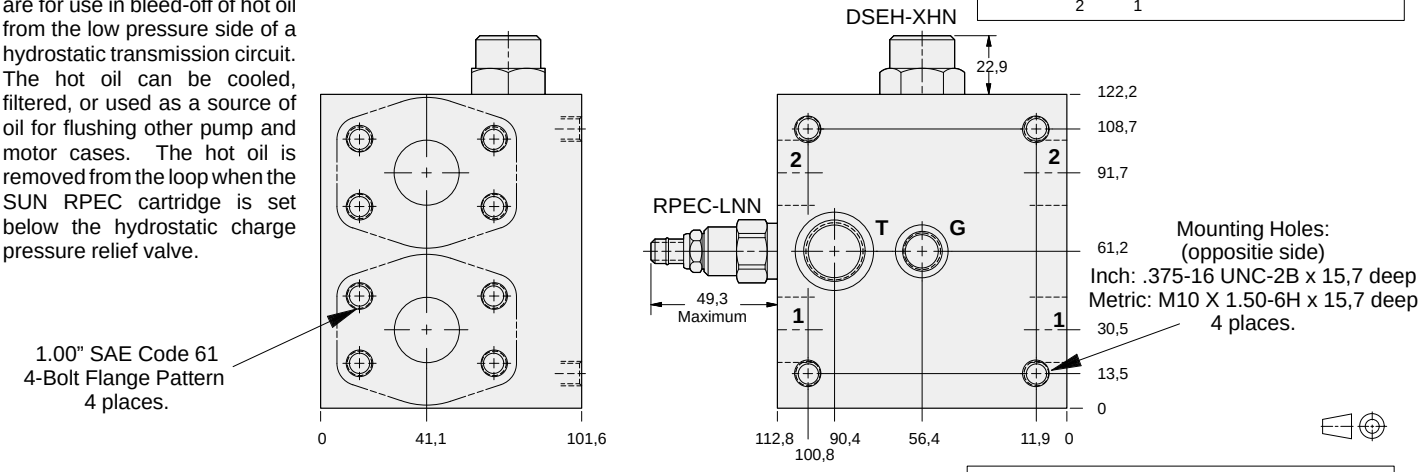

Mounting Hole Dimensions	*Ports 1 & 2*	*Port T*	*Gauge Port*	ALUMINIUM		SG IRON	
				Port Code	*List Price*	*Port Code*	*List Price*
Inch	Code 62	SAE-10	SAE-6	**4**		**4/S**	
Metric	Code 62	.50 BSPP	.25 BSPP	**4/M**		**4/T**	

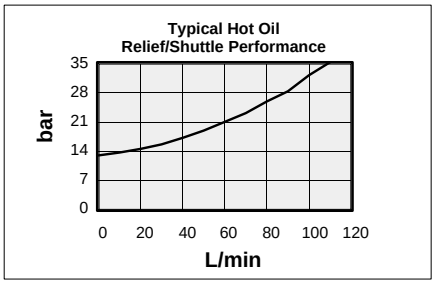

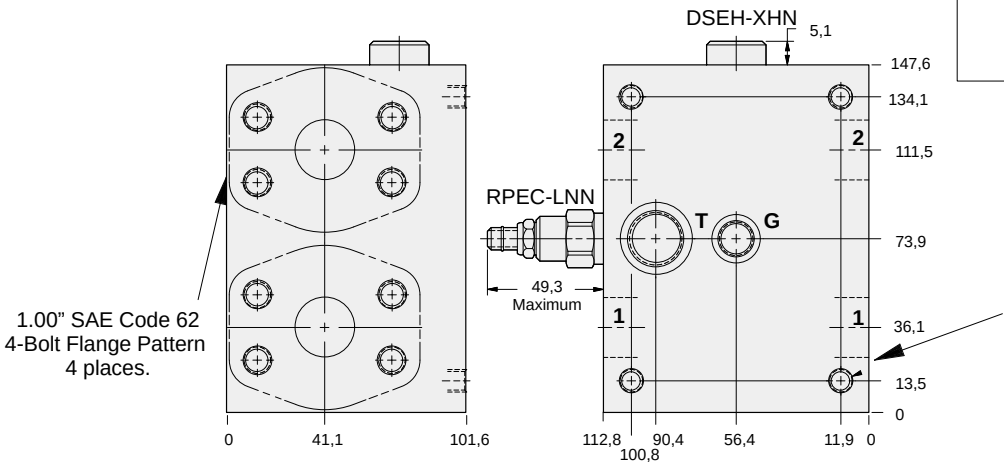

13

OPTIONS

XRFC − LNN − A*

CARTRIDGE

RPEC Pg 1.06
For Viton Seals Change LNN to LNV.

Customer Specified Setting Stamped on Hex

PORTS

See Chart above

HOT OIL SHUTTLE AND RELIEF ASSEMBLY
INLINE BODY

- Aluminium rated to 210 bar and SG Iron rated to 350 bar.
- Hot oil pressure can be confirmed and/or set with transmission in neutral.

These SUN valve assemblies are for use in bleed-off of hot oil from the low pressure side of a hydrostatic transmission circuit. The hot oil can be cooled, filtered, or used as a source of oil for flushing other pump and motor cases. The hot oil is removed from the loop when the SUN RPGC cartridge is set below the hydrostatic charge pressure relief valve.

Mounting Hole Dimensions	*Ports 1 & 2*	*Port T*	*Gauge Port*	**ALUMINIUM**		**SG IRON**	
				Port Code	*List Price*	*Port Code*	*List Price*
Inch	SAE-16	SAE-12	SAE-6	**M**		**M/S**	
Metric	1.00 BSPP	.75 BSPP	.25 BSPP	**X**		**X/S**	

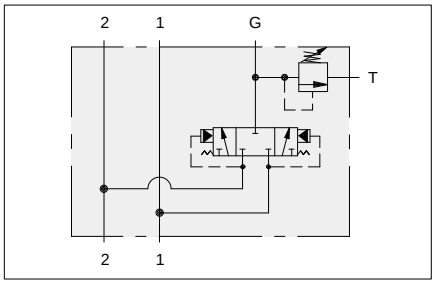

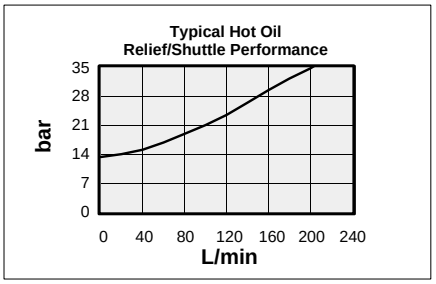

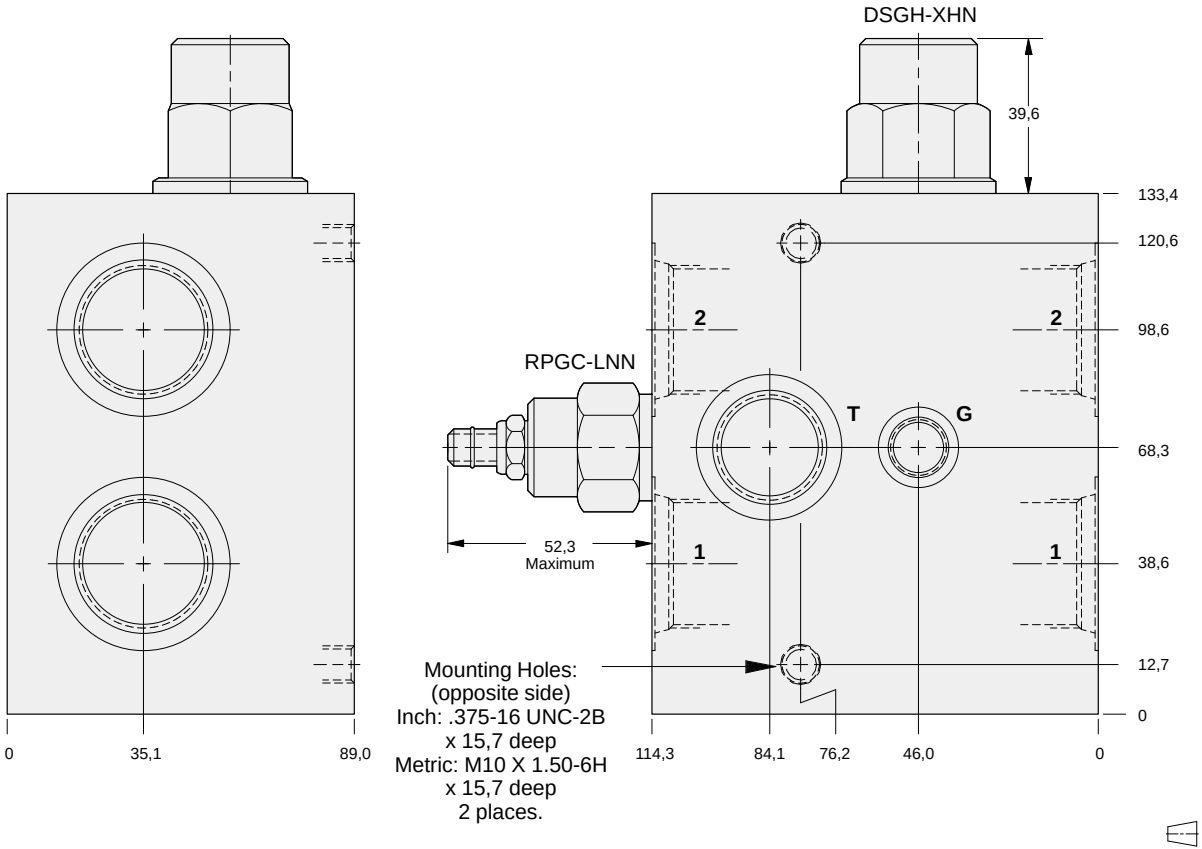

OPTIONS

XRHC – LNN – A*

CARTRIDGE

RPGC Pg 1.06
For Viton Seals Change LNN to LNV.

Customer Specified Setting
Stamped on Hex

PORTS

See Chart above

HOT OIL SHUTTLE AND RELIEF ASSEMBLY
1.25” SAE FLANGE PORT BODY

- Aluminium rated to 210 bar and SG Iron rated to 350 bar.
- Hot oil pressure can be confirmed and/or set with transmission in neutral.

Mounting Hole Dimensions	*Ports 1 & 2*	*Port T*	*Gauge Port*	ALUMINIUM		SG IRON	
				Port Code	*List Price*	*Port Code*	*List Price*
Inch	Code 61	SAE-12	SAE-6	**Q**		**Q/S**	
Metric	Code 61	.75 BSPP	.25 BSPP	**Q/M**		**Q/T**	

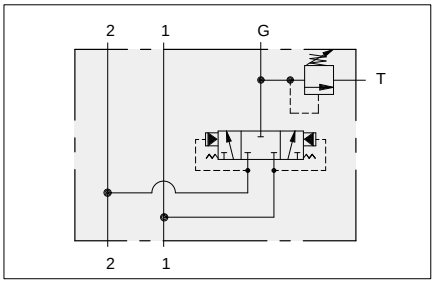

These SUN valve assemblies are for use in bleed-off of hot oil from the low pressure side of a hydrostatic transmission circuit. The hot oil can be cooled, filtered, or used as a source of oil for flushing other pump and motor cases. The hot oil is removed from the loop when the SUN RPGC cartridge is set below the hydrostatic charge pressure relief valve.

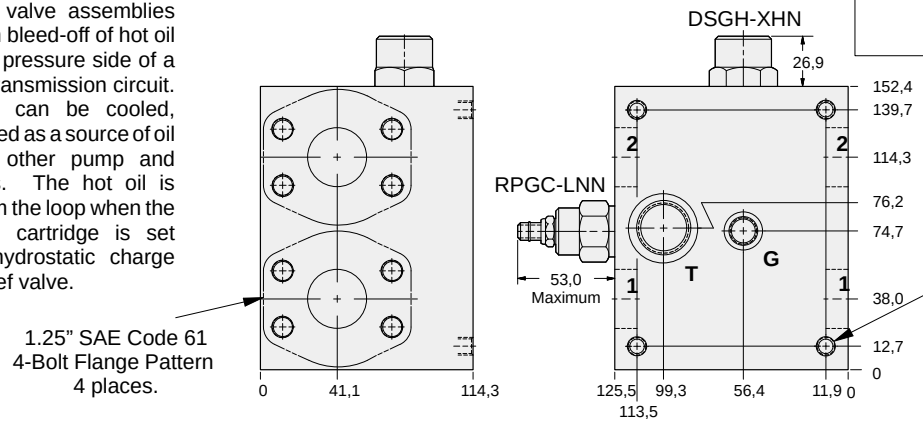

Mounting Hole Dimensions	*Ports 1 & 2*	*Port T*	*Gauge Port*	ALUMINIUM		SG IRON	
				Port Code	*List Price*	*Port Code*	*List Price*
Inch	Code 62	SAE-12	SAE-6	**5**		**5/S**	
Metric	Code 62	.75 BSPP	.25 BSPP	**5/M**		**5/T**	

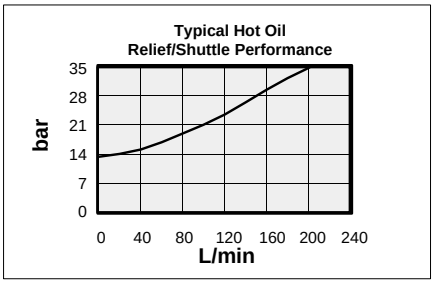

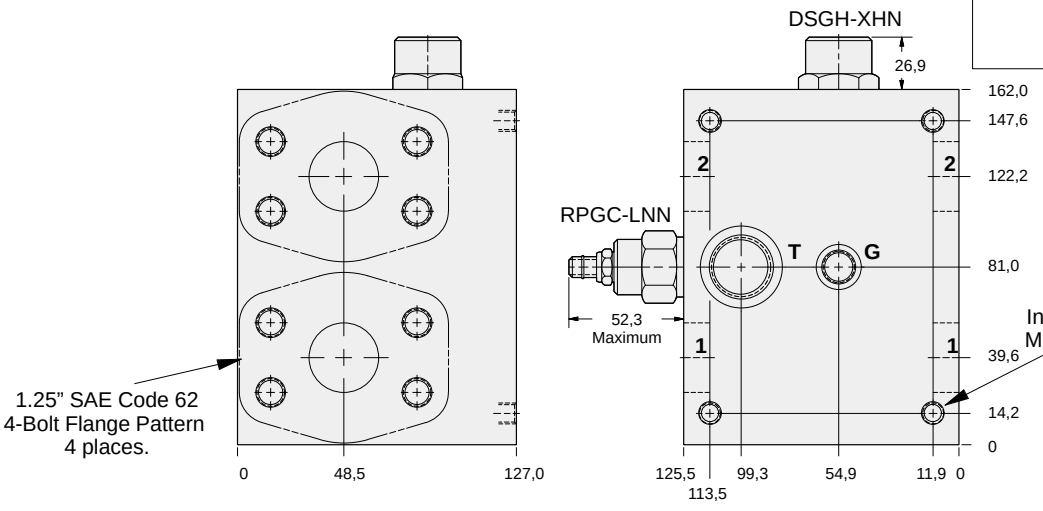

13

OPTIONS

XRHC − LNN − A*

CARTRIDGE

RPGC Pg 1.06
For Viton Seals Change LNN to LNV.

Customer Specified Setting
Stamped on Hex

PORTS

See Chart above

HOT OIL SHUTTLE AND RELIEF ASSEMBLY
INLINE BODY

- Aluminium rated to 210 bar and SG Iron rated to 350 bar.
- Hot oil pressure can be confirmed and/or set with transmission in neutral.

These SUN valve assemblies are for use in bleed-off of hot oil from the low pressure side of a hydrostatic transmission circuit. The hot oil can be cooled, filtered, or used as a source of oil for flushing other pump and motor cases. The hot oil is removed from the loop when the SUN RPIC cartridge is set below the hydrostatic charge pressure relief valve.

Mounting Hole Dimensions	*Ports 1 & 2*	*Port T*	*Gauge Port*	**ALUMINIUM**		**SG IRON**	
				Port Code	*List Price*	*Port Code*	*List Price*
Inch	SAE-20	SAE-16	SAE-6	**M**		**M/S**	
Metric	1.25 BSPP	1.00 BSPP	.25 BSPP	**X**		**X/S**	

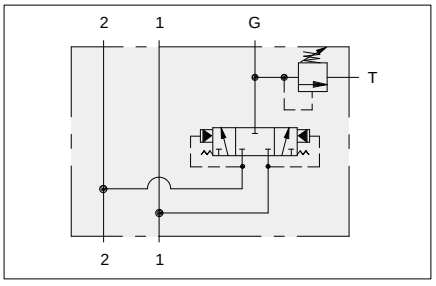

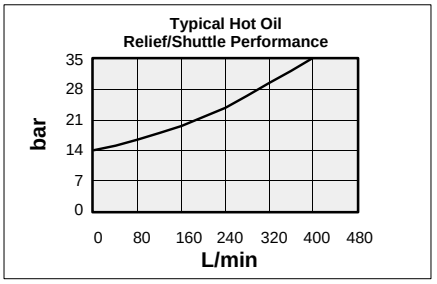

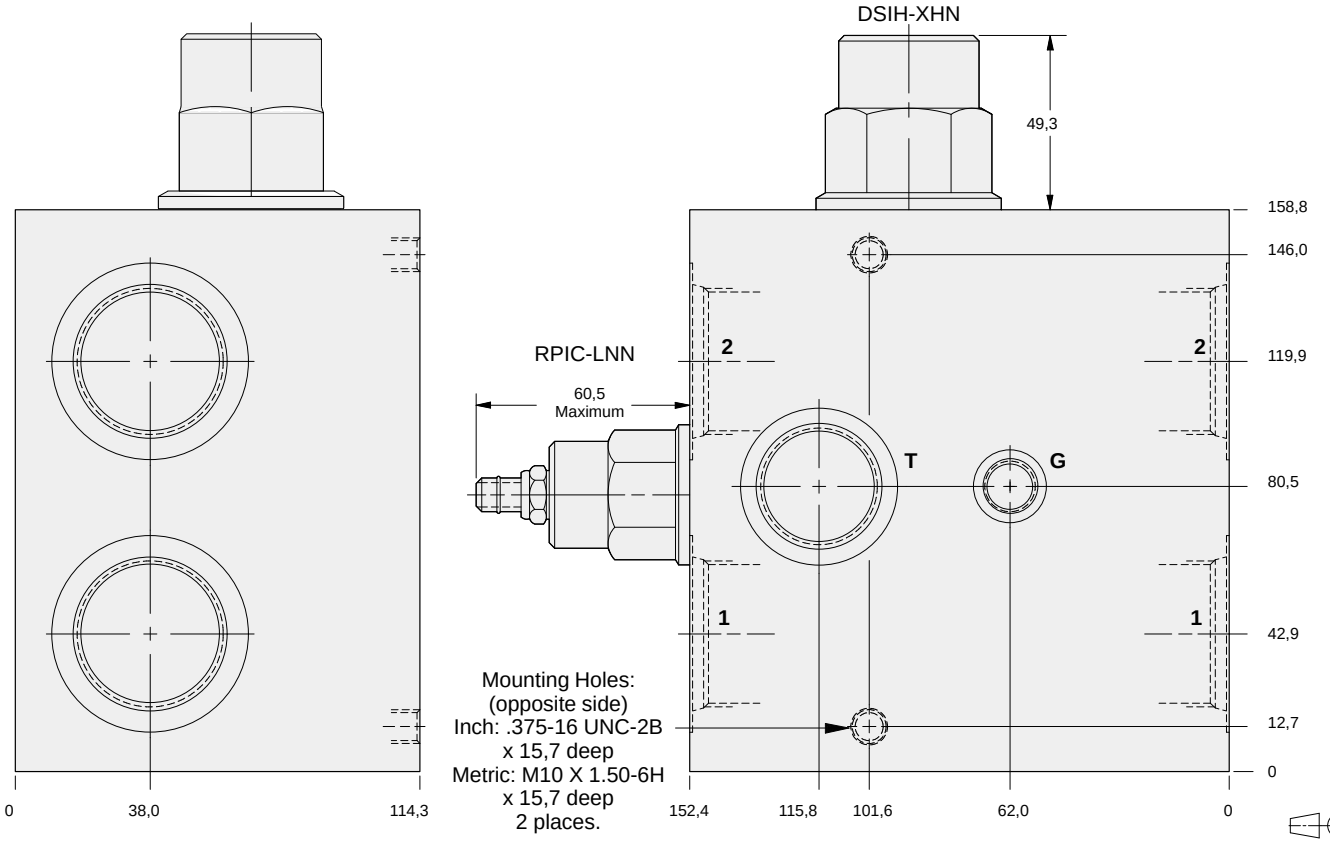

OPTIONS

XRJC – LNN – A*

CARTRIDGE

RPIC Pg 1.07

For Viton Seals Change LNN to LNV.

Customer Specified Setting Stamped on Hex

PORTS

See Chart above

HOT OIL SHUTTLE AND RELIEF ASSEMBLY
1.50” SAE FLANGE PORT BODY

- Aluminium rated to 210 bar and SG Iron rated to 350 bar.
- Hot oil pressure can be confirmed and/or set with transmission in neutral.

Mounting Hole Dimensions	*Ports 1 & 2*	*Port T*	*Gauge Port*	ALUMINIUM		SG IRON	
				Port Code	*List Price*	*Port Code*	*List Price*
Inch	Code 61	SAE-16	SAE-6	**R**		**R/S**	
Metric	Code 61	1.00 BSPP	.25 BSPP	**R/M**		**R/T**	

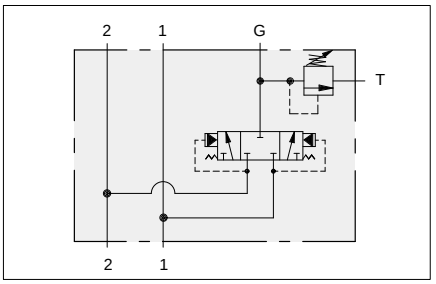

These SUN valve assemblies are for use in bleed-off of hot oil from the low pressure side of a hydrostatic transmission circuit. The hot oil can be cooled, filtered, or used as a source of oil for flushing other pump and motor cases. The hot oil is removed from the loop when the SUN RPIC cartridge is set below the hydrostatic charge pressure relief valve.

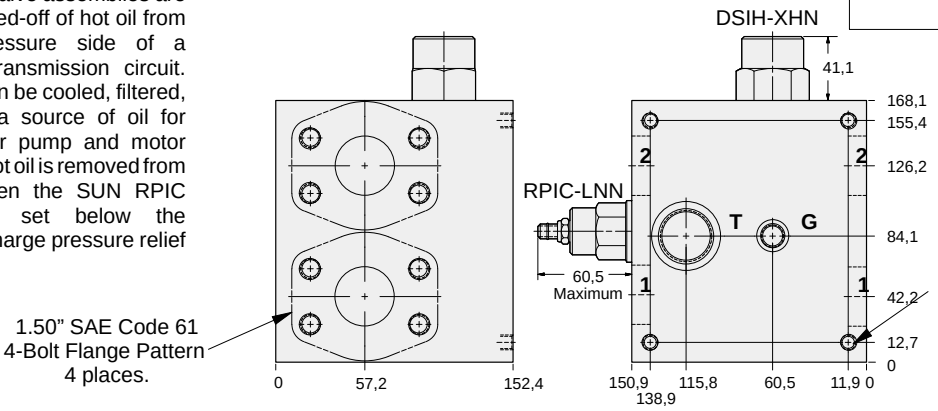

Mounting Holes:
(oppositie side)
Inch: .375-16 UNC-2B x 15,7 deep
Metric: M10 X 1.50-6H x 15,7 deep
4 places.

Mounting Hole Dimensions	*Ports 1 & 2*	*Port T*	*Gauge Port*	ALUMINIUM		SG IRON	
				Port Code	*List Price*	*Port Code*	*List Price*
Inch	Code 62	SAE-16	SAE-6	**6**		**6/S**	
Metric	Code 62	1.00 BSPP	.25 BSPP	**6/M**		**6/T**	

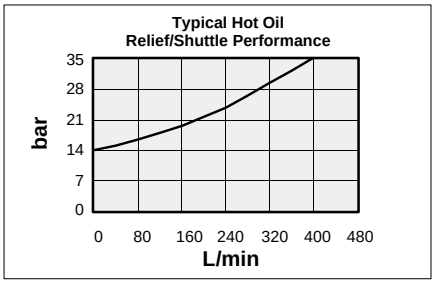

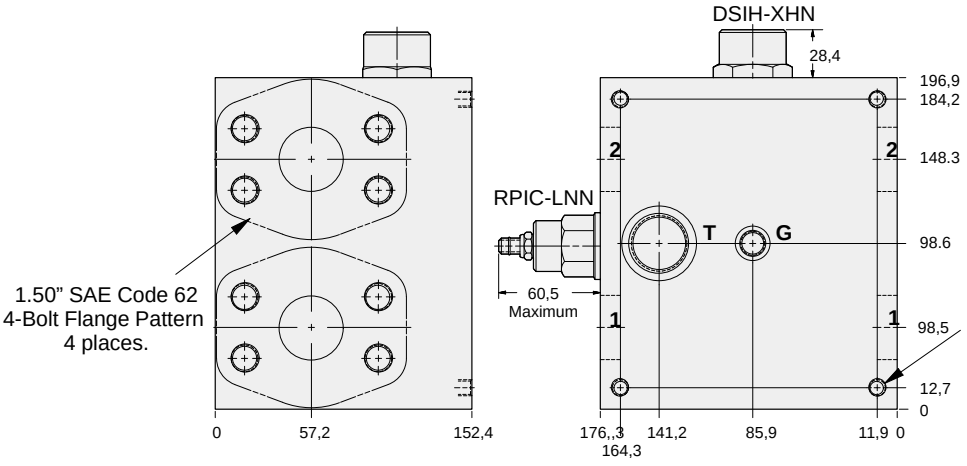

Mounting Holes:
(oppositie side)
Inch: .375-16 UNC-2B x 15,7 deep
Metric: M10 X 1.50-6H x 15,7 deep
4 places.

13

OPTIONS

XRJC − LNN − A*

CARTRIDGE

RPIC Pg 1.07
For Viton Seals Change LNN to LNV.

Customer Specified Setting
Stamped on Hex

PORTS

See Chart above

HOT OIL SHUTTLE AND RELIEF ASSEMBLY
2.00” SAE FLANGE PORT BODY

- Aluminium rated to 210 bar and SG Iron rated to 350 bar.
- Hot oil pressure can be confirmed and/or set with transmission in neutral.

Mounting Hole Dimensions	*Ports 1 & 2*	*Port T*	*Gauge Port*	ALUMINIUM		SG IRON	
				Port Code	*List Price*	*Port Code*	*List Price*
Inch	Code 61	SAE-16	SAE-6	**S**		**S/S**	
Metric	Code 61	1.00 BSPP	.25 BSPP	**S/M**		**S/T**	

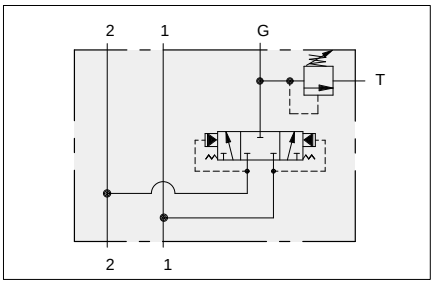

These SUN valve assemblies are for use in bleed-off of hot oil from the low pressure side of a hydrostatic transmission circuit. The hot oil can be cooled, filtered, or used as a source of oil for flushing other pump and motor cases. The hot oil is removed from the loop when the SUN RPIC cartridge is set below the hydrostatic charge pressure relief valve.

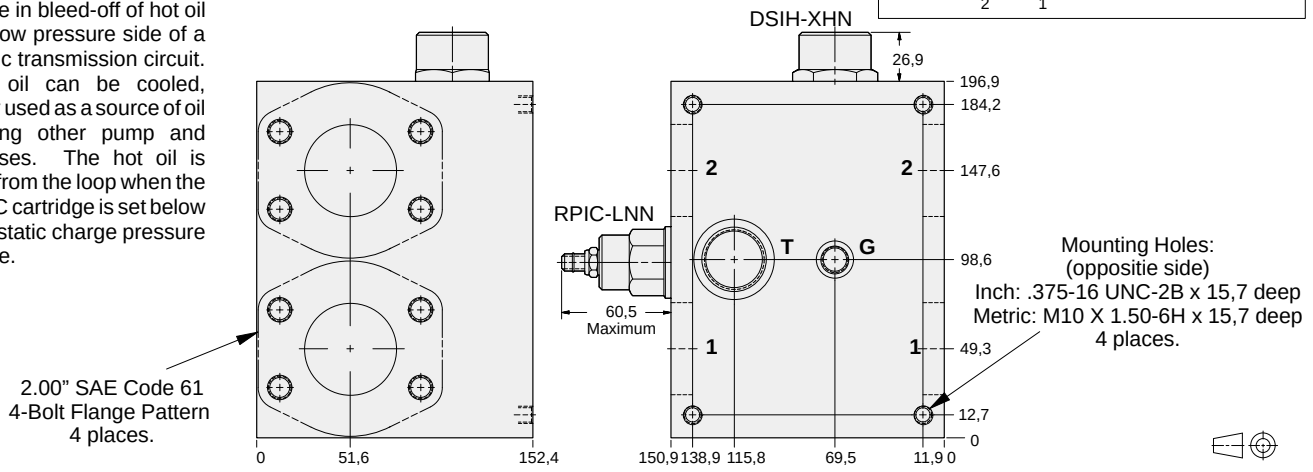

Mounting Hole Dimensions	*Ports 1 & 2*	*Port T*	*Gauge Port*	ALUMINIUM		SG IRON	
				Port Code	*List Price*	*Port Code*	*List Price*
Inch	Code 62	SAE-16	SAE-6	**8**		**8/S**	
Metric	Code 62	1.00 BSPP	.25 BSPP	**8/M**		**8/T**	

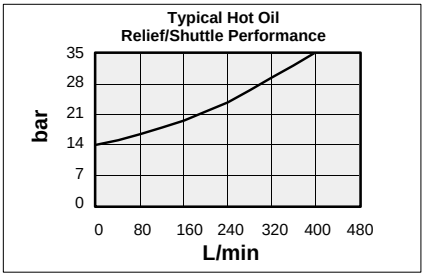

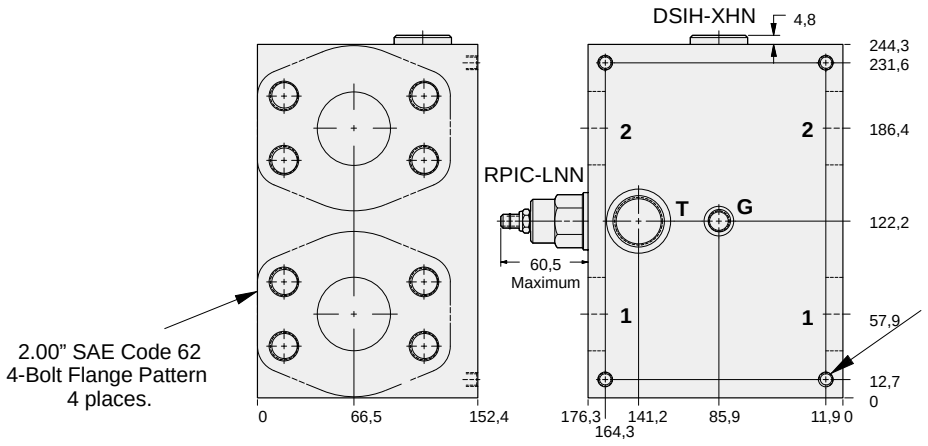

OPTIONS

XRJC − LNN − A*

CARTRIDGE

RPIC Pg 1.07
For Viton Seals Change LNN to LNV.

Customer Specified Setting
Stamped on Hex

PORTS

See Chart above

FLOW DIVIDER/COMBINER TRACTIVE DRIVE ASSEMBLY

- Aluminium rated to 210 bar and SG Iron rated to 350 bar.
- Replaceable slip orifices.

Orifice Options

Orifice Code	Slip at 25 bar	Slip at 210 bar
	Flow (L/min)	Flow (L/min)
A	0	0
L	2,6	7,2
P	6,4	17,8
R	10,5	29,1

Other slip ranges are available, and are detailed on SUN drawing #280–038.
Slip at 25 bar is additive to basic capacity.

Port Options

Ports 2, 3 & 4	ALUMINIUM		SG IRON	
	Port Code	List Price	Port Code	List Price
.25 NPTF	**A**		**A/S**	
.375 NPTF	**B**		**B/S**	
.50 NPTF	**C**		**C/S**	
SAE-6	**I**		**I/S**	
SAE-8	**J**		**J/S**	
SAE-10	**K**		**K/S**	
.25 BSPP	**T**		**T/S**	
.375 BSPP	**U**		**U/S**	
.50 BSPP	**V**		**V/S**	

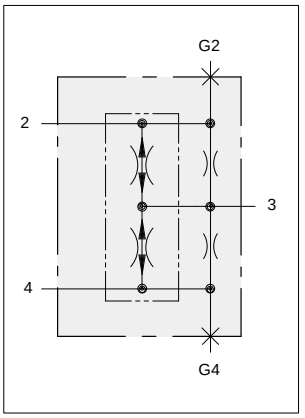

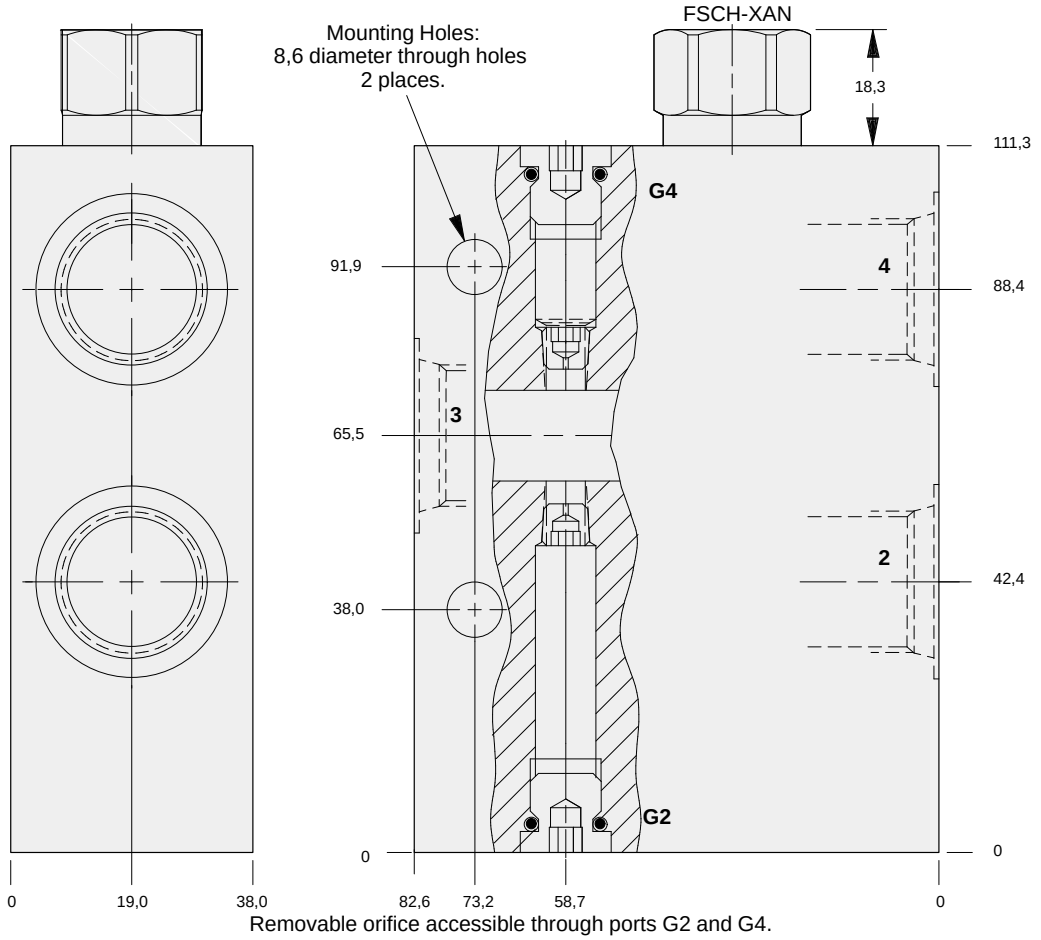

Removable orifice accessible through ports G2 and G4.

OPTIONS

YGCB – XAN – * *

CARTRIDGE
FSCH Pg 7.14
For Viton Seals Change XAN to XAV.

Customer Specified Setting Stamped on Hex

ORIFICE
See Chart above

PORTS
See Chart above

FLOW DIVIDER/COMBINER TRACTIVE DRIVE ASSEMBLY

- Aluminium rated to 210 bar and SG Iron rated to 350 bar.
- Replaceable slip orifices.

Orifice Options

Orifice Code	Slip at 25 bar	Slip at 210 bar
	Flow (L/min)	Flow (L/min)
A	0	0
N	4,5	12,0
S	13	35,0
U	23,0	61,0

Other slip ranges are available, and are detailed on SUN drawing #280–038.
Slip at 25 bar is additive to basic capacity.

Port Options

Ports 2, 3 & 4	ALUMINIUM		SG IRON	
	Port Code	List Price	Port Code	List Price
.375 NPTF	**B**		**B/S**	
.50 NPTF	**C**		**C/S**	
.75 NPTF	**D**		**D/S**	
SAE-8	**J**		**J/S**	
SAE-10	**K**		**K/S**	
SAE-12	**L**		**L/S**	
.375 BSPP	**U**		**U/S**	
.50 BSPP	**V**		**V/S**	
.75 BSPP	**W**		**W/S**	

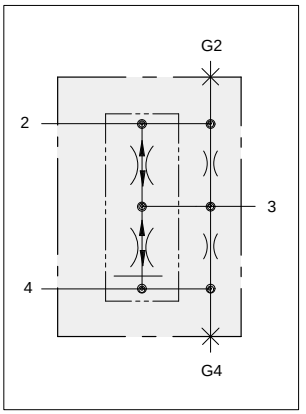

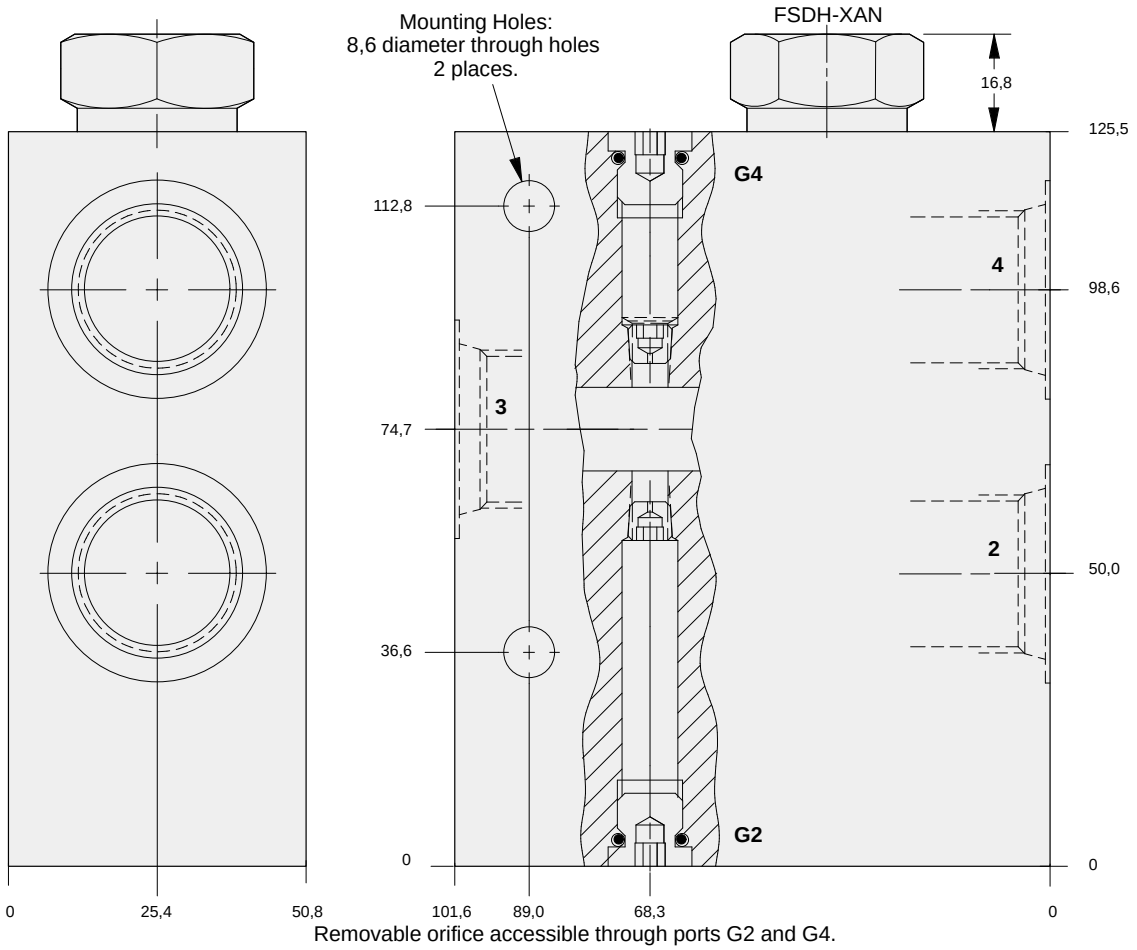

Removable orifice accessible through ports G2 and G4.

OPTIONS

YGDB – XAN – * *

CARTRIDGE
FSDH Pg 7.14
For Viton Seals Change XAN to XAV.

Customer Specified Setting Stamped on Hex

ORIFICE
See Chart above

PORTS
See Chart above

13

FLOW DIVIDER/COMBINER TRACTIVE DRIVE ASSEMBLY

- Aluminium rated to 210 bar and SG Iron rated to 350 bar.
- Replaceable slip orifices.

Orifice Options

Orifice Code	Slip at 25 bar	Slip at 210 bar
	Flow (L/min)	Flow (L/min)
A	0	0
Q	8,7	24,0
U	23,0	61,0
W	35,0	96,0

Other slip ranges are available, and are detailed on SUN drawing #280–038.
Slip at 25 bar additive to basic capacity.

Port Options

Ports 2, 3 & 4	ALUMINIUM		SG IRON	
	Port Code	List Price	Port Code	List Price
.75 NPTF	**D**		**D/S**	
1.00 NPTF	**E**		**E/S**	
SAE-12	**L**		**L/S**	
SAE-16	**M**		**M/S**	
.75 BSPP	**W**		**W/S**	
1.00 BSPP	**X**		**X/S**	

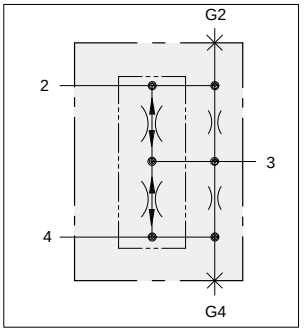

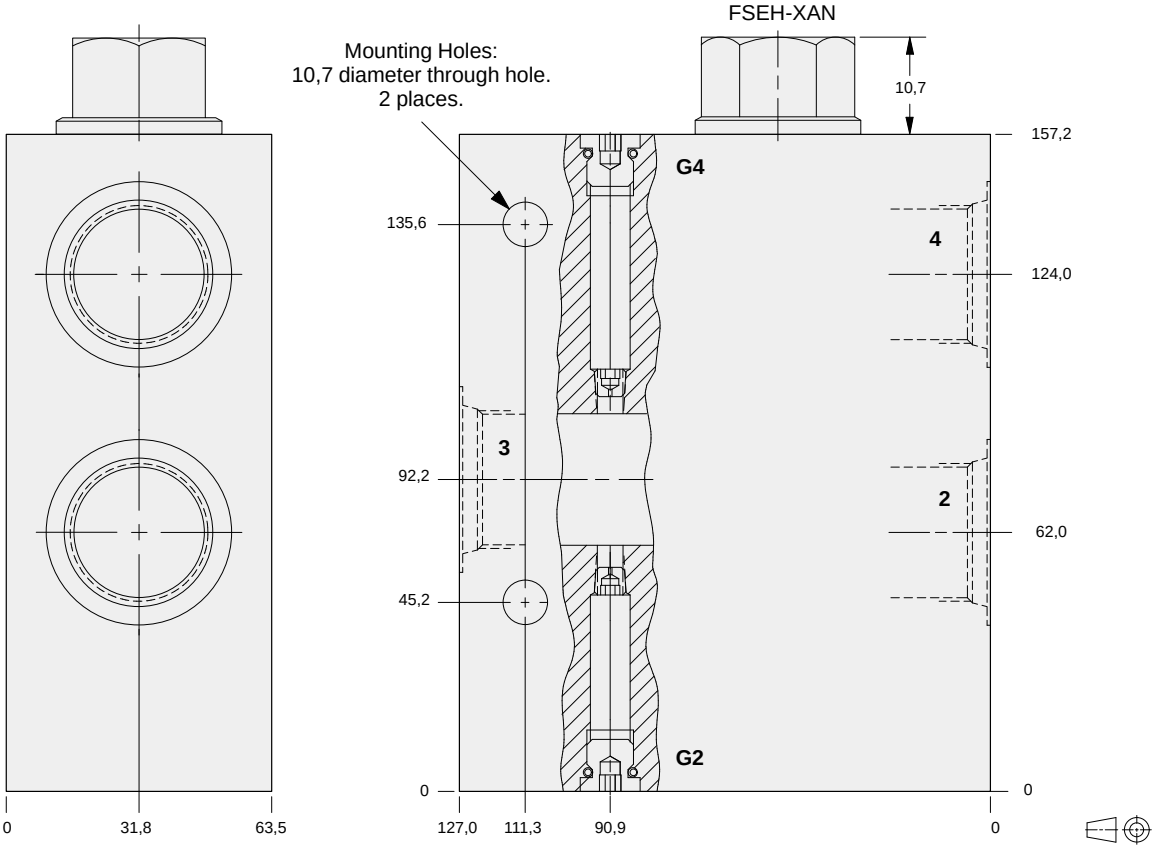

Removable orifice accessible through ports G2 and G4.

OPTIONS

YGEB – XAN – * *

CARTRIDGE
FSEH Pg 7.15
For Viton Seals Change XAN to XAV.

Customer Specified Setting Stamped on Hex

ORIFICE
See Chart above

PORTS
See Chart above

13

FLOW DIVIDER/COMBINER TRACTIVE DRIVE ASSEMBLY

- Aluminium rated to 210 bar and SG Iron rated to 350 bar.
- Replaceable slip orifices.

Orifice Options

Orifice Code	Slip at 25 bar Flow (L/min)	Slip at 210 bar Flow (L/min)
A	0	0
T	17,0	45,0
X	50,0	140,0
Y	90,0	245,0

Other slip ranges are available, and are detailed on SUN drawing #280–040.
Slip at 25 bar is additive to basic capacity.

Port Options

Ports 2, 3 & 4	ALUMINIUM Port Code	ALUMINIUM List Price	SG IRON Port Code	SG IRON List Price
1.00 NPTF	**E**		**E/S**	
1.25 NPTF	**F**		**F/S**	
SAE-16	**M**		**M/S**	
SAE-20	**N**		**N/S**	
1.00 BSPP	**X**		**X/S**	
1.25 BSPP	**Y**		**Y/S**	

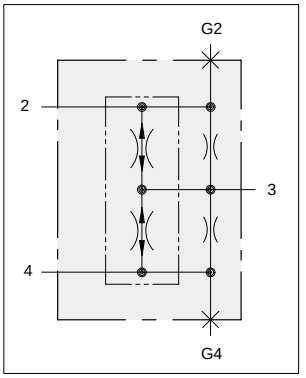

FSFH-XAN

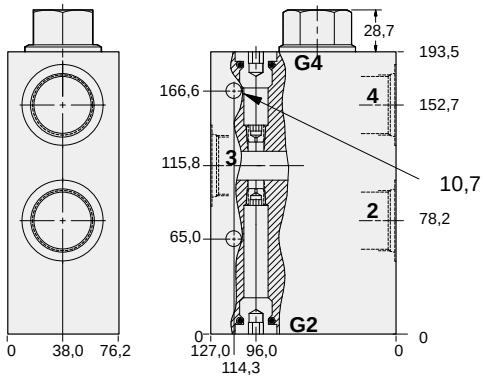

Mounting Holes:
10,7 diameter through hole.
2 places.

Removable orifice accessible through ports G2 and G4.

Orifice Options

Orifice Code	Slip at 25 bar Flow (L/min)	Slip at 210 bar Flow (L/min)
A	0	0
T	17,0	45,0
X	50,0	140,0
Y	90,0	245,0

Other slip ranges are available, and are detailed on SUN drawing #280–040.
Slip at 25 bar is additive to basic capacity.

Mounting Holes:	Port 3 Code 61	Port 2 & 4 Code 61	ALUMINIUM Port Code	ALUMINIUM List Price	SG IRON Port Code	SG IRON List Price
Inch	1.25”	1.00”	**Q**		**Q/S**	
Metric	1.25”	1.00”	**Q/M**		**Q/T**	

FSFH-XAN

1.25” SAE Code 61
4-Bolt Flange Pattern

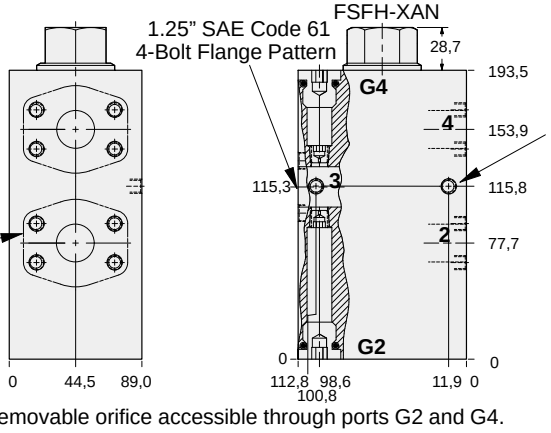

1.00” SAE Code 61
4-Bolt Flange Pattern
2 places.

Mounting Hole:
(opposite side)
Inch: .375-16 UNC-2B
x 15,7 deep.
Metric: M10 x 1.50-6H
x 15,7 deep.

Removable orifice accessible through ports G2 and G4.

OPTIONS

YGFB – XAN – * *

CARTRIDGE
FSFH Pg.7.15
For Viton Seals Change XAN to XAV.

Customer Specified Setting Stamped on Hex

ORIFICE
See Chart above

PORTS
See Chart above

Applications

Regenerative circuits allow a cylinder to be advanced more rapidly than it could be with pump flow alone. To achieve this, oil from the rod end of a cylinder is added to the pump flow to the blind end, increasing the rate of advance.

NOTE: Regeneration circuits apply only to single rod cylinders in the extended direction.

SUN Hydraulics offers two types of regenerative valve assemblies, pressure sensitive and continuous regeneration.

Determination of the type of regenerative circuit to be used is dependent upon the system requirements. In making this determination, several areas need careful consideration.

Pressure sensitive regenerative valves will provide regenerative flow to the blind end of the cylinder until the load induced pressure reaches the setting of the counterbalance valve, at which time rod end oil is automatically diverted to tank. The circuit then becomes non–regenerative and full system pressure is applied to the full blind area, allowing it to develop maximum force.

Continuous (or full time) regenerative valves will provide regenerative flow to the blind end of the cylinder during the complete extension cycle.

Hydraulic cylinders are manufactured with an almost unlimited combination of cylinder–to–rod ratios. These ratios can have a dramatic effect on the speed of extension and retraction of the cylinders.

A 2:1 cylinder (i.e. The blind end piston area is twice the rod end area.) will extend and retract at the same speed if regeneration is used. Without regeneration, the extend speed would be 50% of the retract speed.

Cylinders with large rod diameters typically offer small amounts of oil for use in cylinder extension in regenerative circuits. Rod extension speed therefore may not be increased substantially. In contrast, when retracting a large rod diameter cylinder in a regenerative circuit, the speed may be so great, due the small volume of oil required, that the system may become unstable and generate shock. Conversely, cylinders with small rod diameters may produce shock on rod extension, and retract slowly.

When applying pressure sensitive regenerative valve assemblies, several factors must be considered:

- The pressure required to move a cylinder.
- Rod–to–diameter ratio.
- Pressure adjustment methods required to control the setting of the SUN counterbalance valve.

Losses due to high flows and seal friction may prevent a circuit from staying in regeneration. *Be conservative in system design.*

NOTE: In applications where the load tends to extend the cylinder, a vented pilot to open check valve or a vented counterbalance valve may be installed in the cylinder rod port to positively lock the cylinder.

Formulae to calculate flow in regenerative circuits include:

Regenerative Flow (flow out the rod end) $= \frac{Db^2 - Dr^2}{Dr^2} \times Pump\ Flow$

Combined Flow (pump flow plus regenerative flow) $= \frac{Db^2}{Dr^2} \times Pump\ Flow$

Retraction Flow (flow out of the blind end during retraction) $= \frac{Db^2}{Db^2 - Dr^2} \times Pump\ Flow$

Db = Bore Diameter
Dr = Rod Diameter

Design Concepts and Features

SUN's pressure sensitive regenerative valve assembly incorporates a pressure adjustable counterbalance valve that provides a smooth transition when the work is engaged and pressure in the blind end rises to approximately 25% of the set point of the counterbalance valve, at which time the regenerative flow decreases smoothly until rod end flow is fully diverted to tank. Full pump pressure is then applied to the blind end area developing maximum force.

SUN's full time regenerative valve assembly utilizes a standard check valve in place of the counterbalance valve. This allows flow from the rod end to be supplied to the blind end continuously during the complete extension cycle.

SUN's regenerative valve assemblies are available in various flow rates and packaged as inline, ISO sandwich assemblies, and subplate versions.

13

REGENERATION ASSEMBLY
PRESSURE SENSITIVE

Refer to page 13.42 for further technical information.

- Aluminium rated to 210 bar and SG Iron rated to 350 bar.

YDCC: 60 L/min maximum regenerative flow. Regeneration diminishes progressively above setting of CBCA.

Ports CH CR & VR	ALUMINIUM		SG IRON	
	Port Code	*List Price*	*Port Code*	*List Price*
.50 NPTF	**C**		**C/S**	
SAE-10	**K**		**K/S**	
.50 BSPP	**V**		**V/S**	

NOTE: Refer to page 13.42 if load causes cylinder to extend.

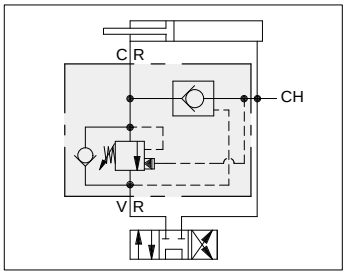

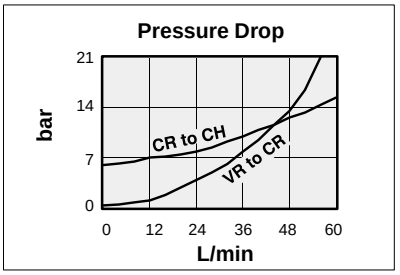

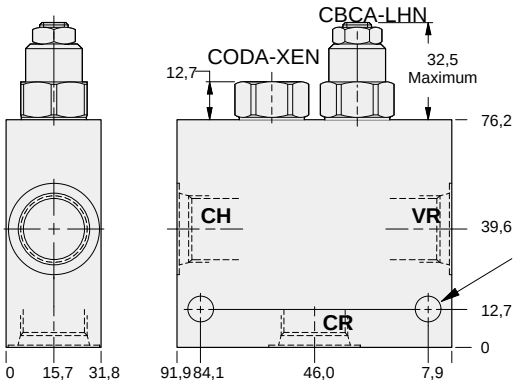

Mounting Holes:
8,6 diameter through holes
2 places.

YDCD: 40 L/min maximum regenerative flow, with load holding check valve. Regeneration diminishes progressively above setting of CBCA.

Ports CH CR & VR	ALUMINIUM		SG IRON	
	Port Code	*List Price*	*Port Code*	*List Price*
.50 NPTF	**C**		**C/S**	
SAE-10	**K**		**K/S**	
.50 BSPP	**V**		**V/S**	

NOTE: Refer to page 13.42 if load causes cylinder to extend.

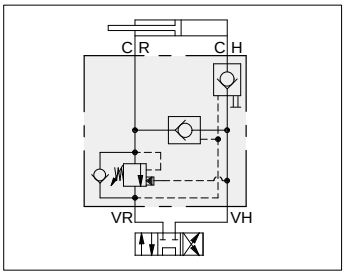

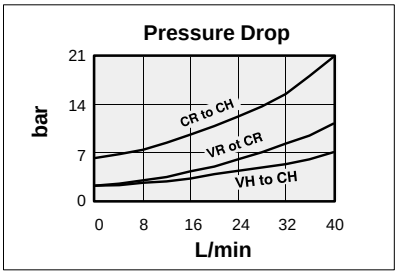

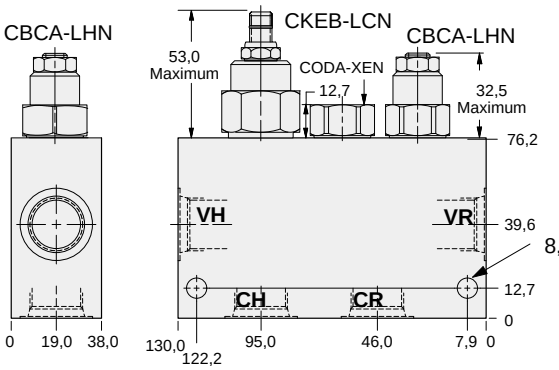

Mounting Holes:
8,6 diameter through hole
2 places.

OPTIONS

YDC* – LHN – A*

FUNCTION

C Less CKEB Load Holding Check

D Includes CKEB Load Holding Check See Pg 4.16

For Viton Seals Change LHN to LHV.

For Viton Seals Change LHN to LHV.

Customer Specified Setting Stamped on Hex

PORTS

See Chart above

REGENERATION ASSEMBLY
PRESSURE SENSITIVE

Refer to page 13.42 for further technical information.

- Aluminium rated to 210 bar and SG Iron rated to 350 bar.

YDEC: 120 L/min maximum regeneration flow. Regeneration diminishes progressively above setting of CBEA.

Ports CH CR & VR	ALUMINIUM Port Code	ALUMINIUM List Price	SG IRON Port Code	SG IRON List Price
.75 NPTF	D		D/S	
SAE-12	L		L/S	
.75 BSPP	W		W/S	

NOTE: Refer to page 13.42 if load causes cylinder to extend.

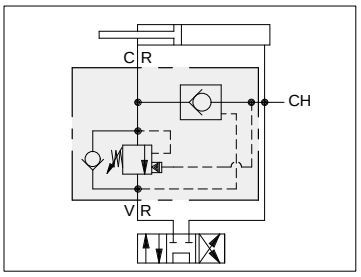

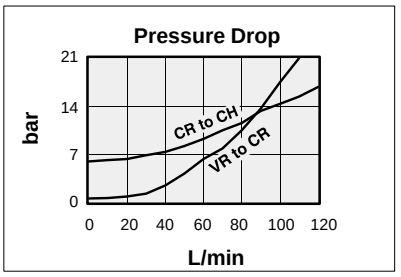

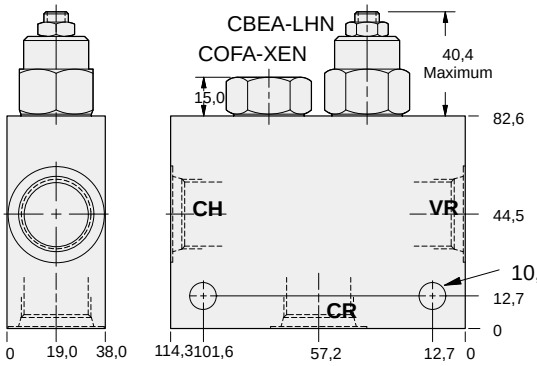

Mounting Holes:
10,7 diameter through hole.
2 places.

YDED: 80 L/min maximum total flow, with load holding check valve. Regeneration diminishes progressively above setting of CBEA.

Ports CH CR & VR	ALUMINIUM Port Code	ALUMINIUM List Price	SG IRON Port Code	SG IRON List Price
.75 NPTF	D		D/S	
SAE-12	L		L/S	
.75 BSPP	W		W/S	

NOTE: Refer to page 13.42 if load causes cylinder to extend.

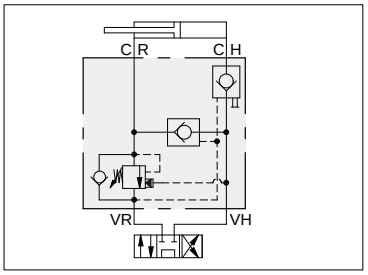

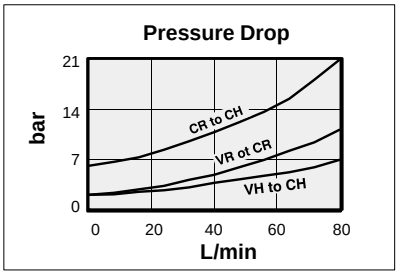

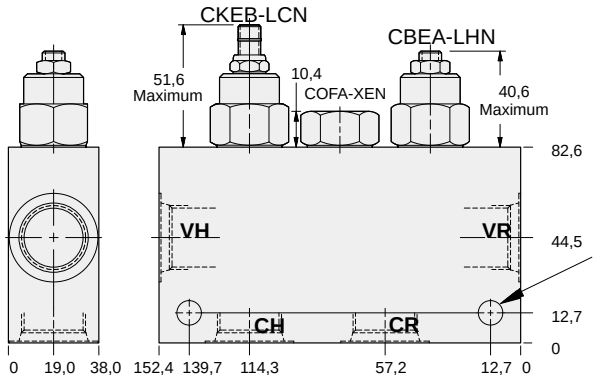

Mounting Holes:
10,7 diameter through hole.
2 places.

13

OPTIONS

YDE* – LHN – A*

FUNCTION

- **C** Less CKEB Load Holding Check
- **D** Includes CKEB Load Holding Check See Pg 4.16

For Viton Seals Change LHN to LHV.

For Viton Seals Change LHN to LHV.

Customer Specified Setting Stamped on Hex

PORTS

See Chart above

REGENERATION ASSEMBLY
PRESSURE SENSITIVE

Refer to page 13.42 for further technical information.

- Aluminium rated to 210 bar and SG Iron rated to 350 bar.

YDGC: 240 L/min maximum regeneration flow. Regeneration diminishes progressively above setting of CBGA .

Mounting Hole Dimensions	*Ports CR, CH & VR*	ALUMINIUM		SG IRON	
		Port Code	*List Price*	*Port Code*	*List Price*
Inch	.75 NPTF	**D**		**D/S**	
Inch	1.00 NPTF	**E**		**E/S**	
Inch	1.25 NPTF	**F**		**F/S**	
Inch	SAE-12	**L**		**L/S**	
Inch	SAE-16	**M**		**M/S**	
Inch	SAE-20	**N**		**N/S**	
Metric	.75 BSPP	**W**		**W/S**	
Metric	1.00 BSPP	**X**		**X/S**	
Metric	1.25 BSPP	**Y**		**Y/S**	
Inch	1.00" SAE Code 61	**P**		**P/S**	
Metric		**P/M**		**P/T**	

NOTE: Refer to page 13.42 if load causes cylinder to extend.

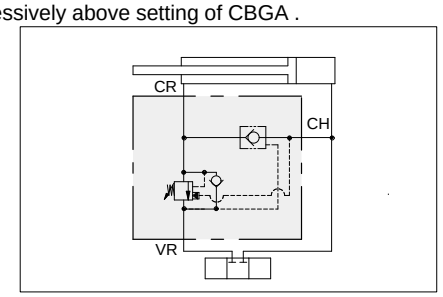

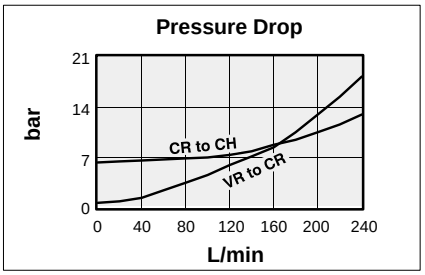

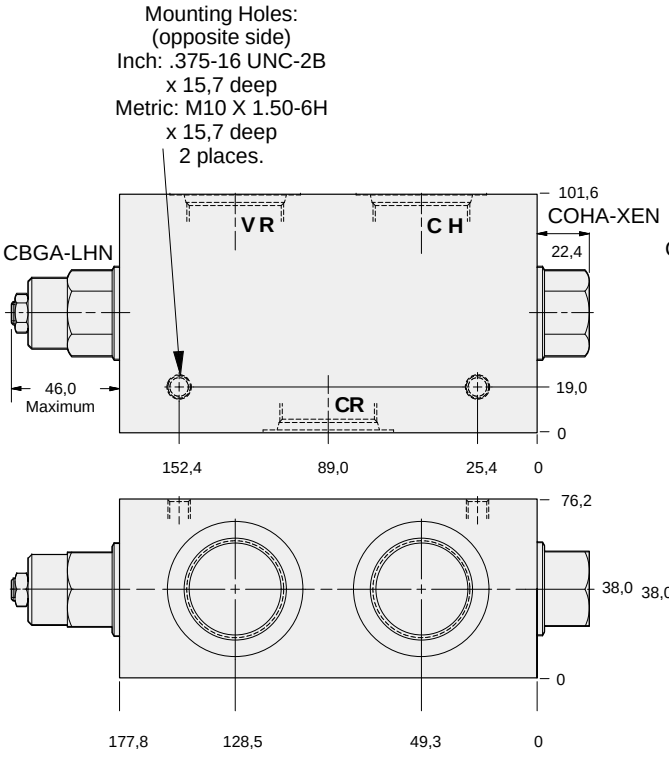

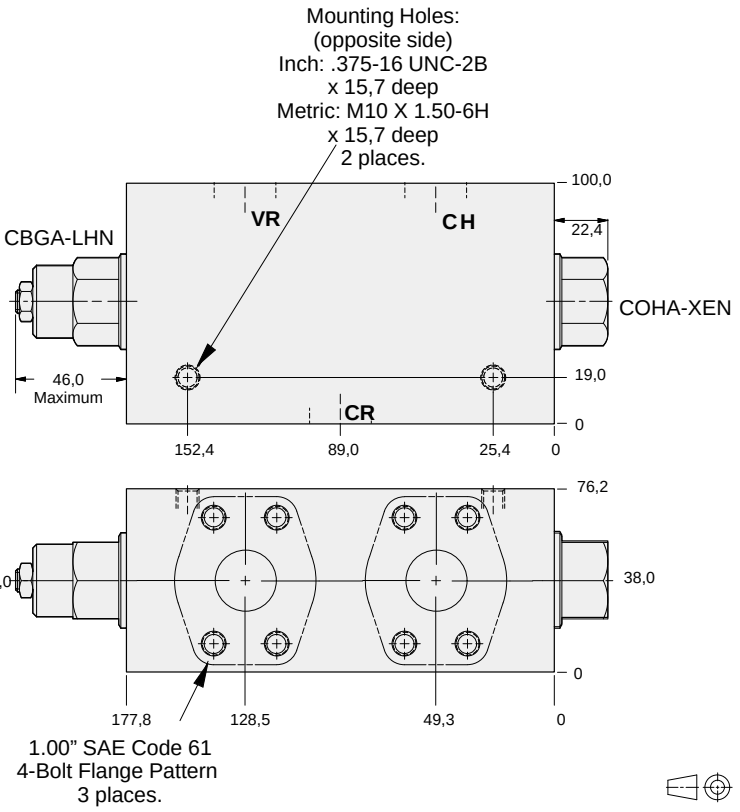

OPTIONS

YDGC – LHN – A*

For Viton Seals Change LHN to LHV.

Customer Specified Setting Stamped on Hex

PORTS

See Chart above

REGENERATION ASSEMBLY
PRESSURE SENSITIVE

Refer to page 13.42 for further technical information.

- Aluminium rated to 210 bar and Ductile Iron rated to 350 bar.

YDGD: 200 L/min maximum regeneration flow. Regeneration diminishes progressively above setting of CBGA.

Mounting Hole Dimensions	*Ports CH, CR & VR*	ALUMINIUM		SG IRON	
		Port Code	*List Price*	*Port Code*	*List Price*
Inch	.75 NPTF	**D**		**D/S**	
Inch	1.00 NPTF	**E**		**E/S**	
Inch	1.25 NPTF	**F**		**F/S**	
Inch	SAE-12	**L**		**L/S**	
Inch	SAE-16	**M**		**M/S**	
Inch	SAE-20	**N**		**N/S**	
Metric	.75 BSPP	**W**		**W/S**	
Metric	1.00 BSPP	**X**		**X/S**	
Metric	1.25 BSPP	**Y**		**Y/S**	
Inch	1.25" SAE Code 61	**Q**		**Q/S**	
Metric		**Q/M**		**Q/T**	

NOTE: Refer to page 13.42 if load causes cylinder to extend.

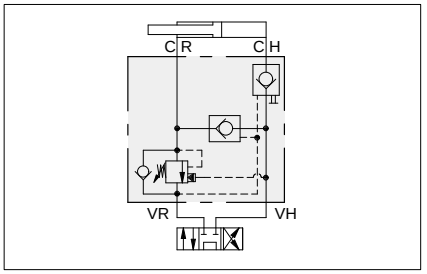

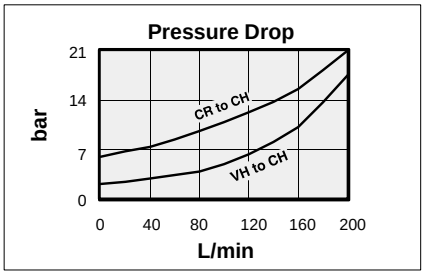

Mounting Holes:
(opposite side)
Inch: .375-16 UNC-2B
x 15,7 deep
Metric: M10 X 1.50-6H
x 15,7 deep
2 places.

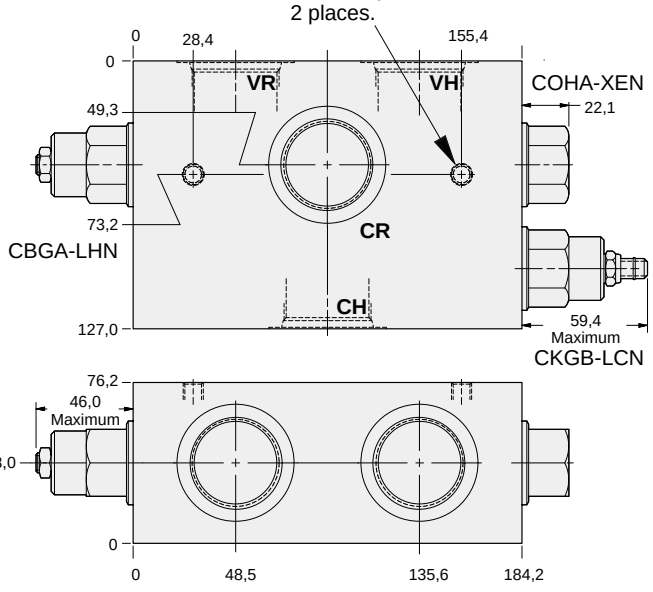

Mounting Holes:
(opposite side)
Inch: .375-16 UNC-2B
x 15,7 deep
Metric: M10 X 1.50-6H
x 15,7 deep
2 places.

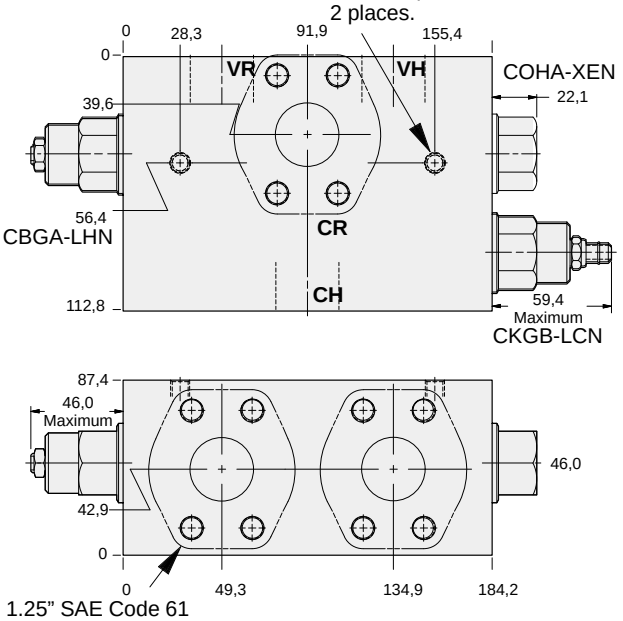

1.25" SAE Code 61
4-Bolt Flange Pattern
2 places.

OPTIONS

YDGD – LHN – A*

For Viton Seals Change
LHN to LHV.

Customer Specified Setting
Stamped on Hex

PORTS
See Chart
above

REGENERATION ASSEMBLY
PRESSURE SENSITIVE

Refer to page 13.42 for further technical information.

- Aluminium rated to 210 bar and SG Iron rated to 350 bar.

YDHC: 480 L/min maximum regeneration flow. Regeneration diminishes progressively above setting of CBGA.

Mounting Hole Dimensions	ALUMINIUM		SG IRON	
	Port Code	*List Price*	*Port Code*	*List Price*
Inch	**5**		**5/S**	
Metric	**5/M**		**5/T**	

NOTE: Refer to page 13.42 if load causes cylinder to extend.

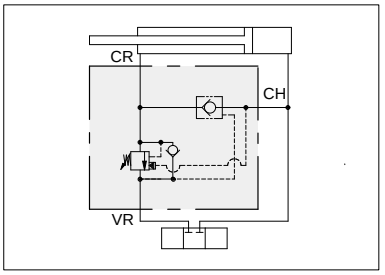

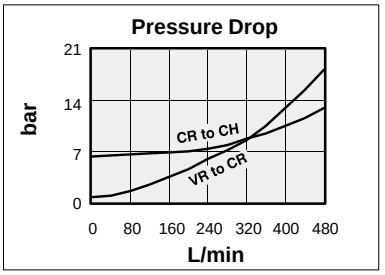

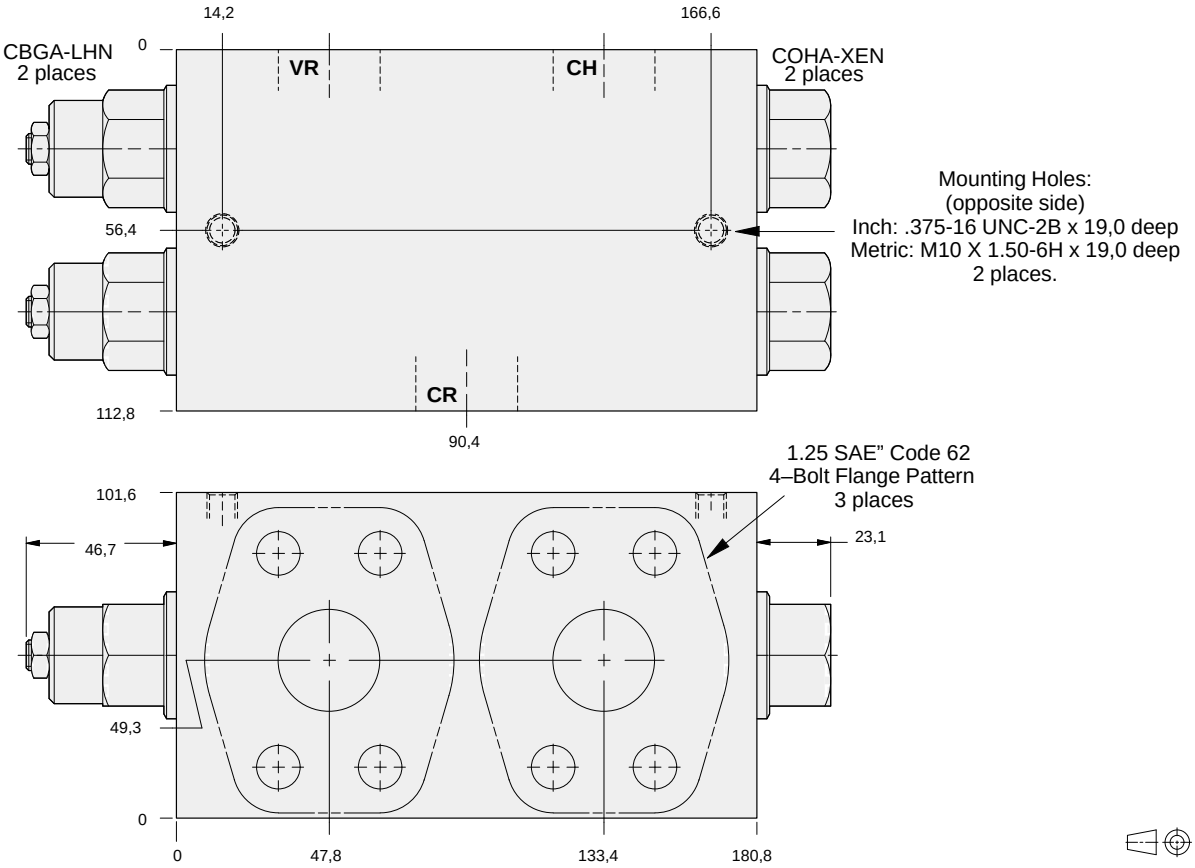

13

OPTIONS

YDHC – LHN – A*

For Viton Seals Change LHN to LHV.

Customer Specified Setting Stamped on Hex

PORTS

See Chart above

REGENERATION ASSEMBLY
PRESSURE SENSITIVE

Refer to page 13.42 for further technical information.

- Aluminium rated to 210 bar and SG Iron rated to 350 bar.

YDJC: 480 L/min maximum regeneration flow. Regeneration diminishes progressively above setting of CBIA.

Ports CH CR & VR	ALUMINIUM		SG IRON	
	Port Code	*List Price*	*Port Code*	*List Price*
SAE-20	**N**		**N/S**	

NOTE: Refer to page 13.42 if load causes cylinder to extend.

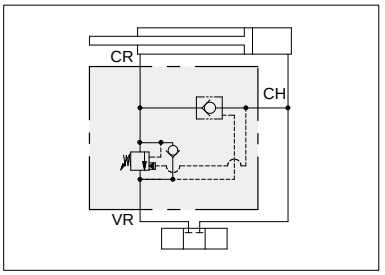

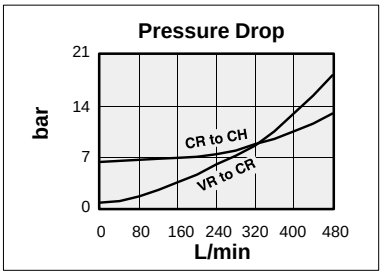

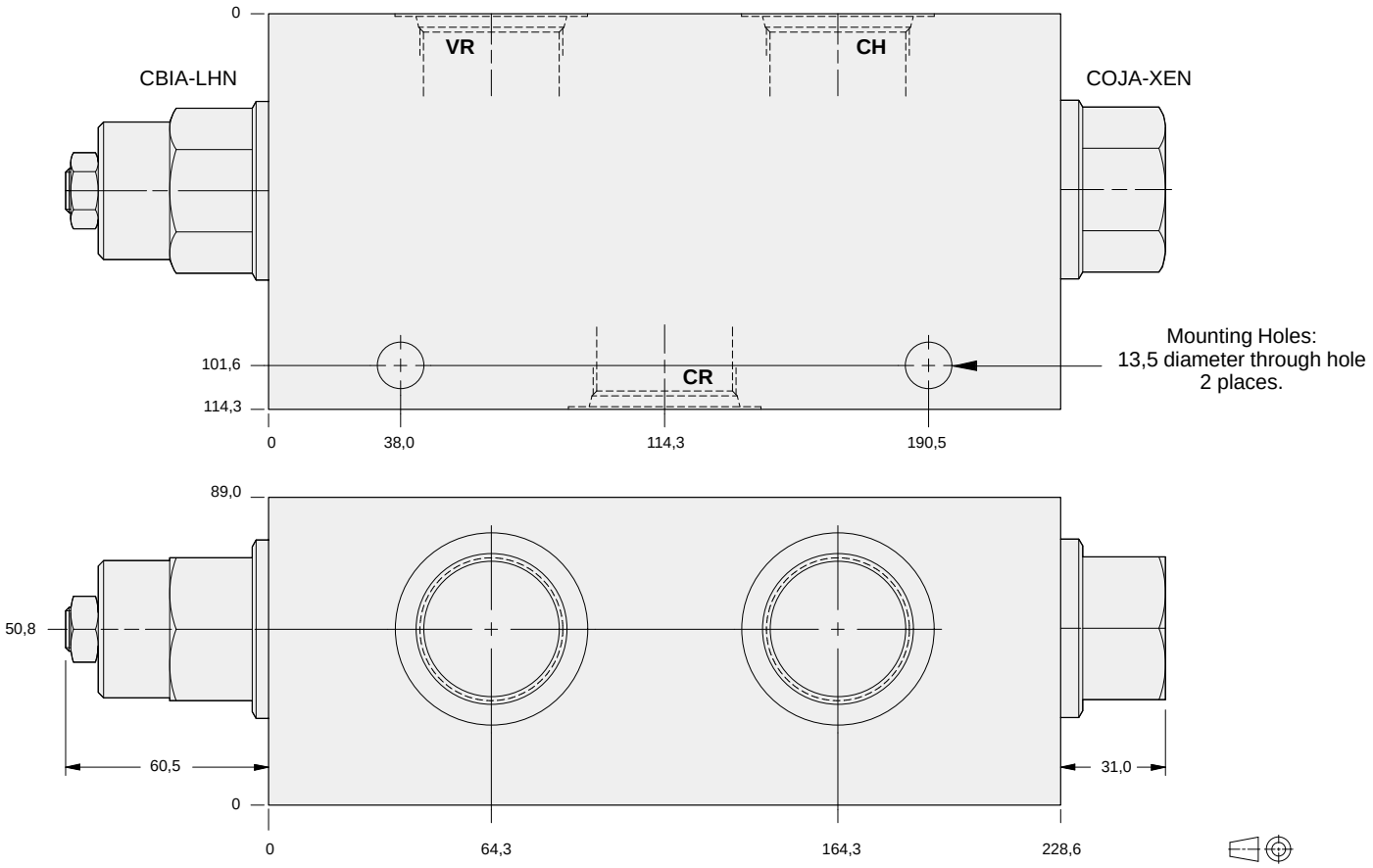

13

OPTIONS

YDJC – LHN – A*

For Viton Seals Change LHN to LHV.

Customer Specified Setting Stamped on Hex

PORTS

See Chart above

REGENERATION ASSEMBLY
PRESSURE SENSITIVE

Refer to page 13.42 for further technical information.

- Aluminium rated to 210 bar and SG Iron rated to 350 bar.

YDJC: 960 L/min maximum regeneration flow. Regeneration diminishes progressively above setting of CBIA.

Mounting Hole Dimensions	ALUMINIUM		SG IRON	
	Port Code	*List Price*	*Port Code*	*List Price*
Inch	**S**		**S/S**	
Metric	**S/M**		**S/T**	

NOTE: Refer to page 13.42 if load causes cylinder to extend.

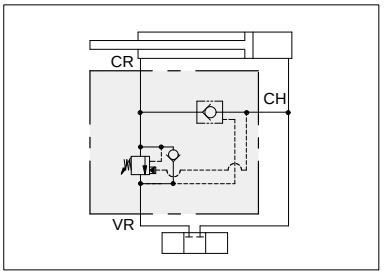

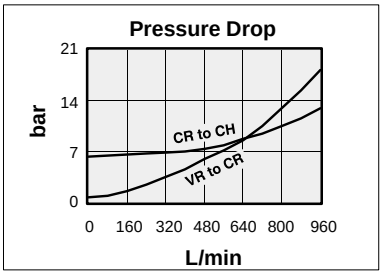

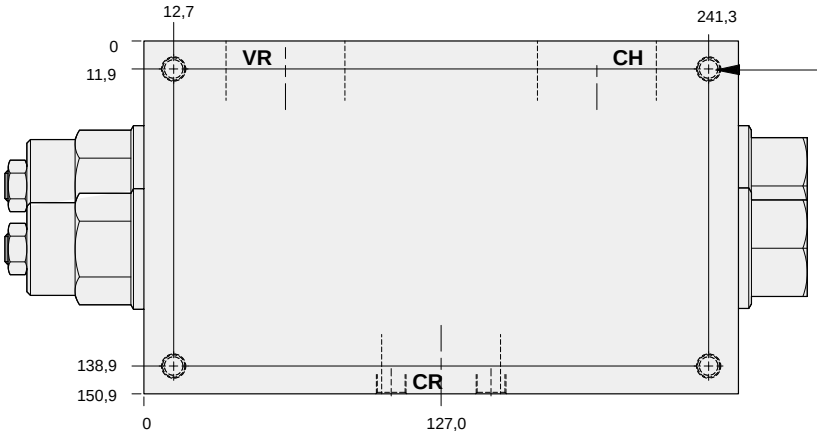

Mounting Holes:
(opposite side)
Inch: .375-16 UNC-2B x 15,7 deep
Metric: M10 X 1.50-6H x 15,7 deep
4 places.

2.00" SAE Code 61
4-Bolt Flange Pattern
3 places.

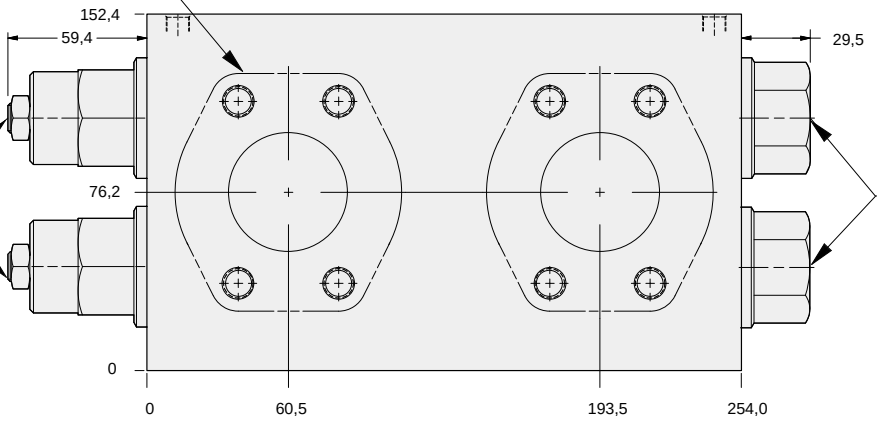

CBIA-LHN
2 places

COJA-XEN
2 places

Refer to page 13.42 if load causes cylinder to extend.

OPTIONS

YDJC – LHN – A*

For Viton Seals Change
LHN to LHV.

Customer Specified Setting
Stamped on Hex

PORTS
See Chart
above

- Aluminium rated to 210 bar and SG Iron rated to 350 bar.

Ports P, T A1 & A2	ALUMINIUM		SG IRON	
	Port Code	List Price	Port Code	List Price
.25 NPTF	A		A/S	
.375 NPTF	B		B/S	
.50 NPTF	C		C/S	
.75 NPTF	D		D/S	
SAE-6	I		I/S	
SAE-8	J		J/S	
SAE-10	K		K/S	
SAE-12	L		L/S	
.25 BSPP	T		T/S	
.375 BSPP	U		U/S	
.50 BSPP	V		V/S	
.75 BSPP	W		W/S	

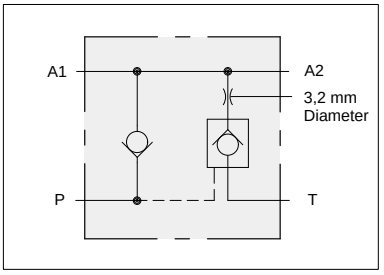

CXFA-XCN

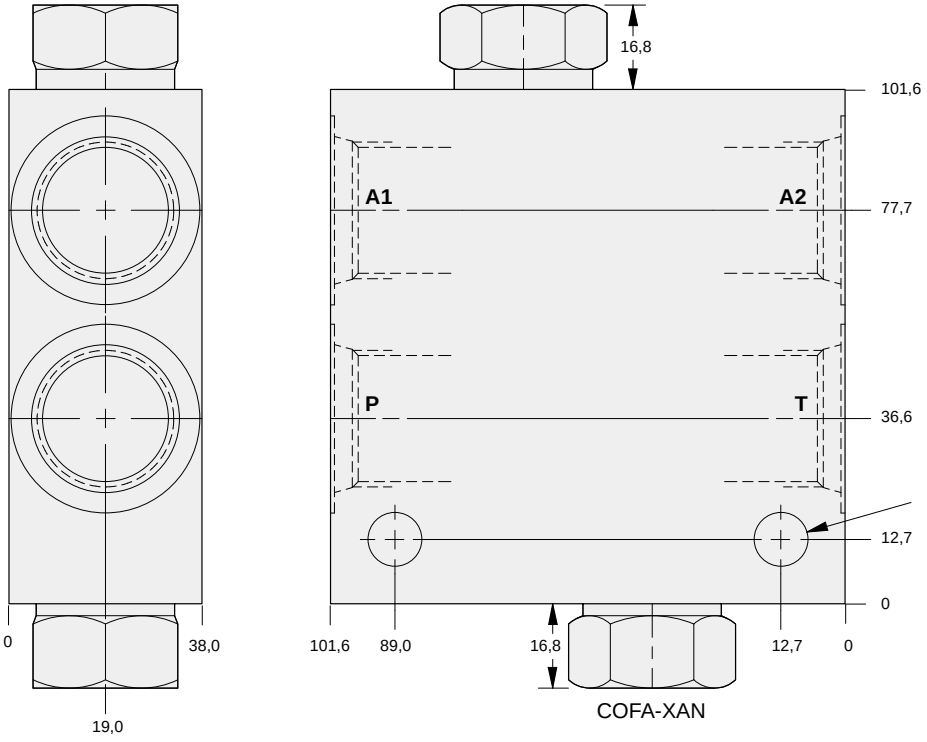

Mounting Holes:
10,7 diameter through hole.
2 places.

13

OPTIONS

YCFE – XAN – A*

For Viton Seals Change XAN to XAV.

PORTS
See Chart above

ACCUMULATOR DUMP ASSEMBLY

- Aluminium rated to 210 bar and SG Iron rated to 350 bar.

Ports P, A1 & A2	Port T	ALUMINIUM Port Code	ALUMINIUM List Price	SG IRON Port Code	SG IRON List Price
.75 NPTF	.50 NPTF	**D**		**D/S**	
1.00 NPTF	.50 NPTF	**E**		**E/S**	
1.25 NPTF	.50 NPTF	**F**		**F/S**	
SAE-12	SAE-8	**L**		**L/S**	
SAE-16	SAE-8	**M**		**M/S**	
SAE-20	SAE-8	**N**		**N/S**	
.75 BSPP	.50 BSPP	**W**		**W/S**	
1.00 BSPP	.50 BSPP	**X**		**X/S**	
1.25 BSPP	.50 BSPP	**Y**		**Y/S**	

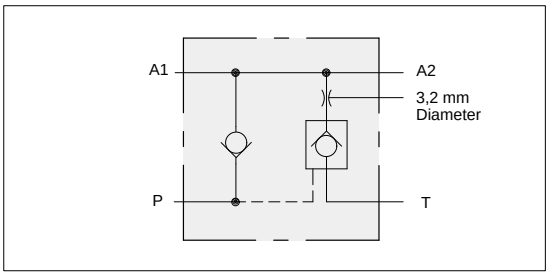

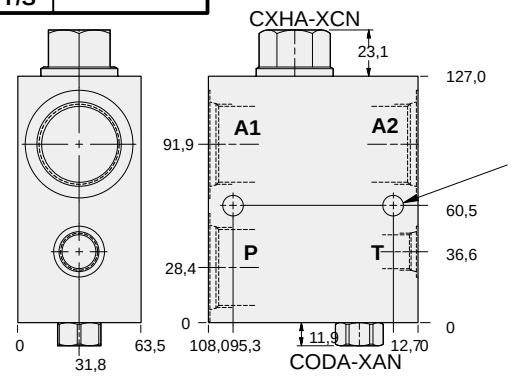

Mounting Holes:
10,7 diameter through hole.
2 places.

Mounting Hole Dimensions	Ports A1, A2, P Code 61	Port T	ALUMINIUM Port Code	ALUMINIUM List Price	SG IRON Port Code	SG IRON List Price
Inch	1.00”	SAE-8	**P**		**P/S**	
Metric	1.00”	.50 BSPP	**P/M**		**P/T**	
Inch	1.25”	SAE-8	**Q**		**Q/S**	
Metric	1.25”	.50 BSPP	**Q/M**		**Q/T**	

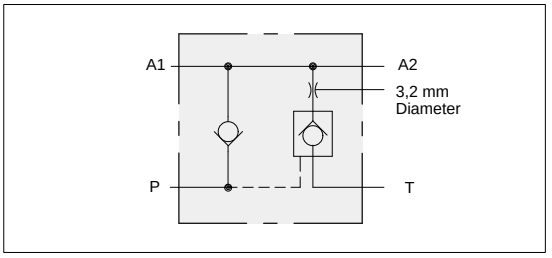

Code 61
4-Bolt Flange Pattern
3 places.

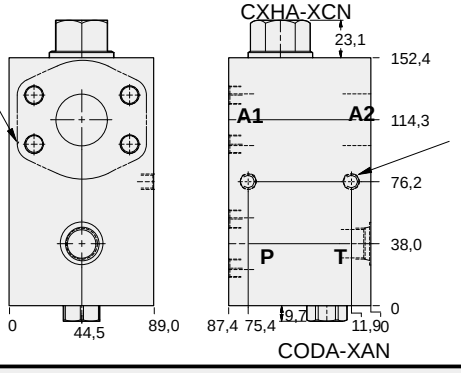

Mounting Holes:
(opposite sides)
Inch: .375-16 UNC-2B
x 15,7 deep
Metric: M10 X 1.50-6H
x 15,7 deep
2 places.

OPTIONS

YCHE – XAN – A*

For Viton Seals Change XAN to XAV.

PORTS
See Chart above

PUMP CIRCUIT CONTROL ASSEMBLY
SUITABLE FOR RESERVIOR MOUNTING
FOR USE WITH MULTIPLE PUMP CIRCUITS

- Aluminium rated to 210 bar and SG Iron rated to 350 bar.

YFRC: 95 L/min

Mounting Hole Dimensions	*Port P, S, & T2*	*Port T1*	*Gauge Port*	ALUMINIUM		SG IRON	
				Port Code	*List Price*	*Port Code*	*List Price*
Inch	.75 NPTF	.50 NPTF	.25 NPTF	**D**		**D/S**	
Inch	SAE-12	SAE-8	.25 NPTF	**L**		**L/S**	
Metric	.75 BSPP	.50 BSPP	.25 BSPP	**W**		**W/S**	

YFRC and YFRE valves are suitable for multiple pump circuits when connected directly to each pump in the system. They provide air–bleed and relief protection for each pump and the check valve position isolates the other pumps from the valve assembly.

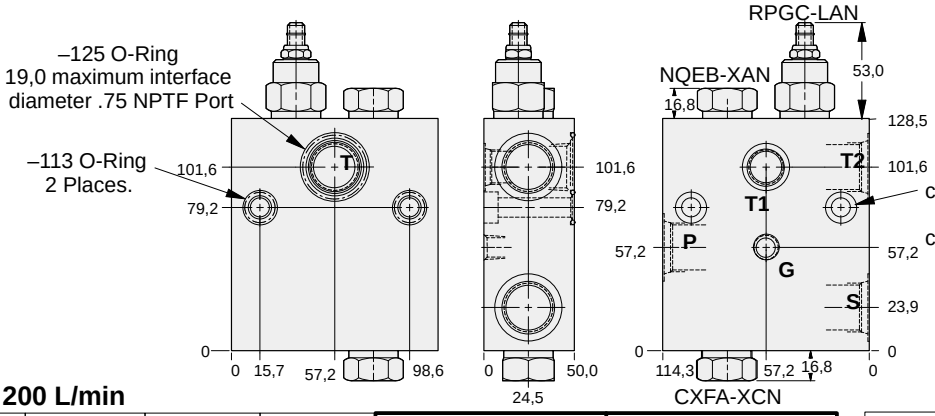

Mounting Holes:
Inch: 10,4 diameter through hole, counterbore 15,0 diameter x 7,9 deep.
Metric: 10,7 diameter through hole, counterbore 17,3 diameter x 7,9 deep 2 places.

YFRE: 200 L/min

Mounting Hole Dimensions	*Port P, S, & T2*	*Port T1*	*Gauge Port*	ALUMINIUM		SG IRON	
				Port Code	*List Price*	*Port Code*	*List Price*
Inch	1.00 NPTF	.75 NPTF	.25 NPTF	**E**		**E/S**	
Inch	SAE-16	SAE-12	.25 NPTF	**M**		**M/S**	
Metric	1.00 BSPP	.75 BSPP	.25 BSPP	**X**		**X/S**	

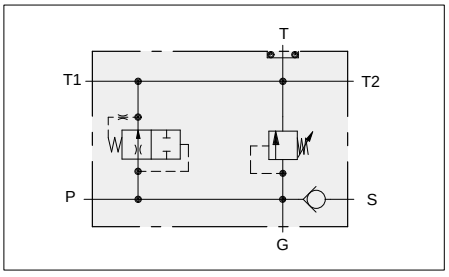

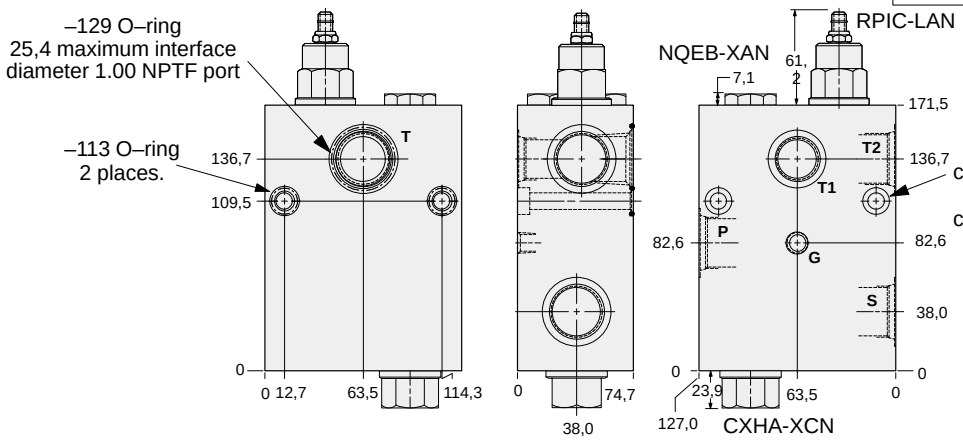

Mounting Holes:
Inch: 10,4 diameter through hole, counterbore 15,0 diameter x 7,9 deep.
Metric: 10,7 diameter through hole, counterbore 17,3 diameter x 7,9 deep 2 places.

13

OPTIONS

YFR* – LAN – A*

FLOW CAPABILITY

C 95 L/min RPGC Cartridge

E 200 L/min RPIC Cartridge

Customer Specified Setting Stamped on Hex

For Viton Seals Change LAN to LAV.

For Viton Seals Change LAN to LAV.

PORTS

See Chart above

PUMP CIRCUIT CONTROL ASSEMBLY
SUITABLE FOR RESERVIOR MOUNTING
FOR USE WITH SINGLE PUMP CIRCUITS

- Aluminium rated to 210 bar and SG Iron rated to 350 bar.

YFRD: 95 L/min

Mounting Hole Dimensions	*Port P, S, & T2*	*Port T1*	*Gauge Port*	ALUMINIUM		SG IRON	
				Port Code	*List Price*	*Port Code*	*List Price*
Inch	.75 NPTF	.50 NPTF	.25 NPTF	**D**		**D/S**	
Inch	SAE-12	SAE-8	.25 NPTF	**L**		**L/S**	
Metric	.75 BSPP	.50 BSPP	.25 BSPP	**W**		**W/S**	

The SUN pump circuit manifold contains an air-bleed and start up valve, main system relief, and a check valve for use with any basic power unit. O– ring seals for one of the tank ports and bolt mounting holes are provided for direct reservoir mounting. All T ports are also threaded.

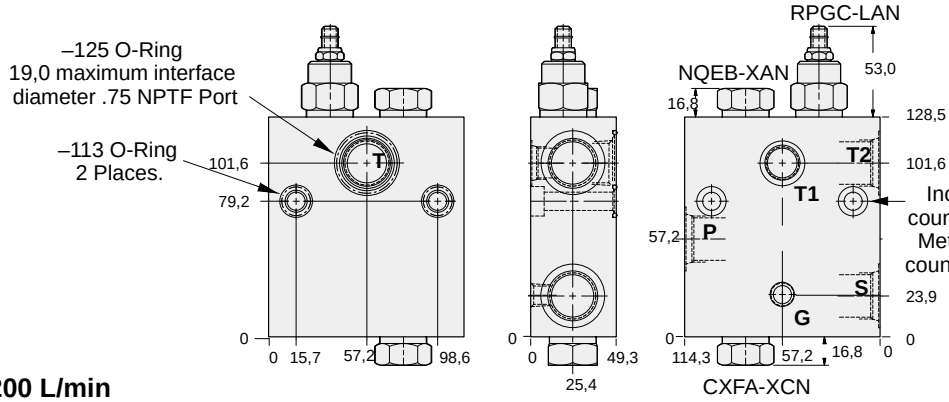

Mounting Holes:
Inch: 10,4 diameter through hole, counterbore 15,0 diameter x 7,9 deep.
Metric: 10,7 diameter through hole, counterbore 17,3 diameter x 7,9 deep 2 places.

YFRF: 200 L/min

Mounting Hole Dimensions	*Port P, S, & T2*	*Port T1*	*Gauge Port*	ALUMINIUM		SG IRON	
				Port Code	*List Price*	*Port Code*	*List Price*
Inch	1.00 NPTF	.75 NPTF	.25 NPTF	**E**		**E/S**	
Inch	SAE-16	SAE-12	.25 NPTF	**M**		**M/S**	
Metric	1.00 BSPP	.75 BSPP	.25 BSPP	**X**		**X/S**	

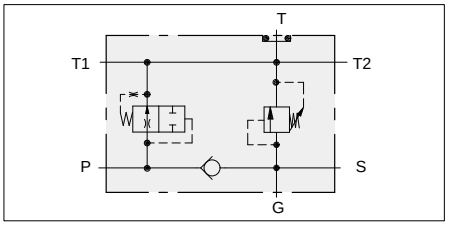

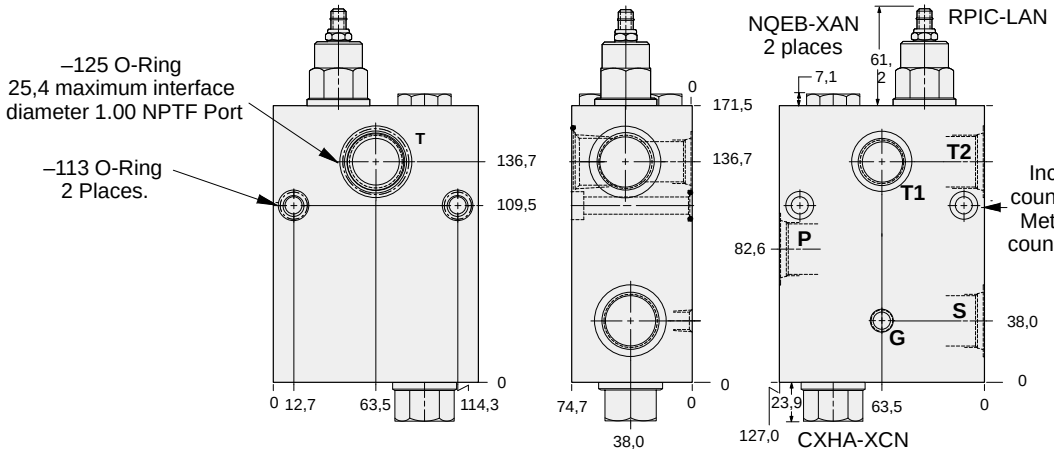

Mounting Holes:
Inch: 10,4 diameter through hole, counterbore 15,0 diameter x 7,9 deep.
Metric: 10,7 diameter through hole, counterbore 17,3 diameter x 7,9 deep 2 places.

OPTIONS

YFR* – LAN A*

FLOW CAPABILITY

D 95 L/min RPGC Cartridge

F 200 L/min RPIC Cartridge

Customer Specified Setting Stamped on Hex

For Viton Seals Change LAN to LAV.

For Viton Seals Change LAN to LAV.

PORTS

See Chart above

PRESSURE–COMPENSATED PRIORITY FLOW CONTROL ASSEMBLY WITH RELIEF ON CONTROLLED FLOW PORT

Customer Must Specify Flow ⊗

- Aluminium rated to 210 bar and SG Iron rated to 350 bar.

YRDR: Up to 23 L/min Priority Flow.

Ports EF & P	Ports CF & T	Gauge Port	ALUMINIUM Port Code	ALUMINIUM List Price	SG IRON Port Code	SG IRON List Price
.25 NPTF	.25 NPTF	.25 NPTF	A		A/S	
.375 NPTF	.375 NPTF	.25 NPTF	B		B/S	
.50 NPTF	.375 NPTF	.25 NPTF	C		C/S	
SAE-6	SAE-6	.25 NPTF	I		I/S	
SAE-8	SAE-8	.25 NPTF	J		J/S	
SAE-10	SAE-8	.25 NPTF	K		K/S	
.25 BSPP	.25 BSPP	.25 BSPP	T		T/S	
.375 BSPP	.375 BSPP	.25 BSPP	U		U/S	
.50 BSPP	.375 BSPP	.25 BSPP	V		V/S	

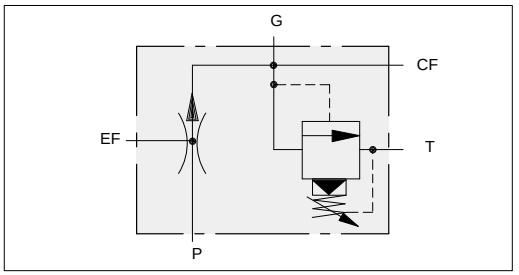

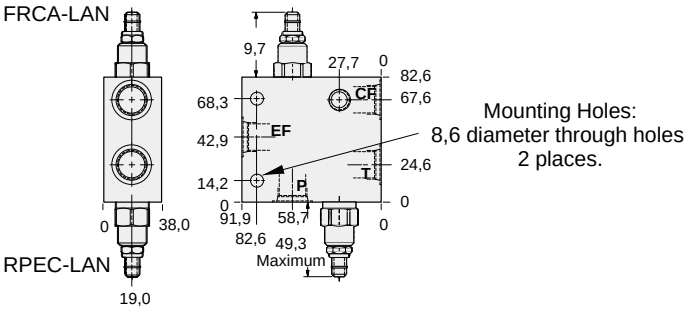

YREM: Up to 45 L/min Priority Flow.

Ports EF & P	Ports CF & T	Gauge Port	ALUMINIUM Port Code	ALUMINIUM List Price	SG IRON Port Code	SG IRON List Price
.50 NPTF	.50 NPTF	.25 NPTF	C		C/S	
.75 NPTF	.50 NPTF	.25 NPTF	D		D/S	
SAE-10	SAE-10	.25 NPTF	K		K/S	
SAE-12	SAE-10	.25 NPTF	L		L/S	
.50 BSPP	.50 BSPP	.25 BSPP	V		V/S	
.75 BSPP	.50 BSPP	.25 BSPP	W		W/S	

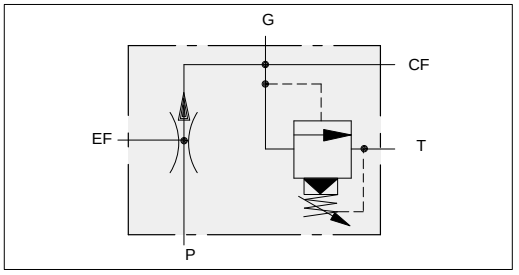

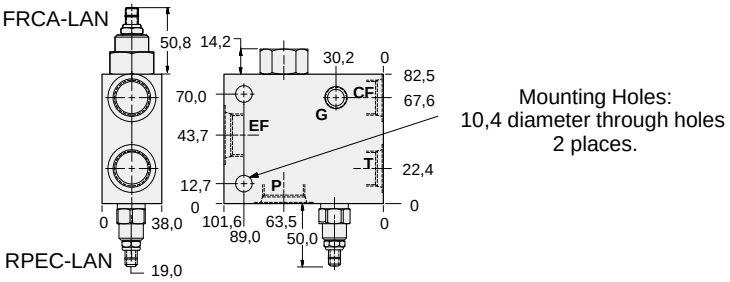

13

OPTIONS

YR – LAN – ****

FLOW CAPACITY

DR	Up to 23 L/min	For Viton Seals Change LAN to LAV.
EM	Up to 45 L/min	Customer Specified Setting Stamped on Hex

FLOW ADJUSTMENTS

L	Tuning Adjust
X	Non–adjustable

PORTS

See Chart above

⊗ ***Customer must specify flow. 0,4 to 45 L/min***

PRESSURE–COMPENSATED PRIORITY FLOW CONTROL ASSEMBLY WITH RELIEF ON CONTROLLED FLOW PORT

Customer Must Specify Flow ⊗

- Aluminium rated to 210 bar and SG Iron rated to 350 bar.

YRFF: Up to 95 L/min Priority Flow.

Ports EF & P	*Ports CF & T*	*Gauge Port*	ALUMINIUM		SG IRON	
			Port Code	*List Price*	*Port Code*	*List Price*
.75 NPTF	.75 NPTF	.25 NPTF	**D**		**D/S**	
1.00 NPTF	.75 NPTF	.25 NPTF	**E**		**E/S**	
1.25 NPTF	.75 NPTF	.25 NPTF	**F**		**F/S**	
SAE-12	SAE-12	.25 NPTF	**L**		**L/S**	
SAE-16	SAE-12	.25 NPTF	**M**		**M/S**	
SAE-20	SAE-12	.25 NPTF	**N**		**N/S**	
.75 BSPP	.75 BSPP	.25 BSPP	**W**		**W/S**	
1.00 BSPP	.75 BSPP	.25 BSPP	**X**		**X/S**	
1.25 BSPP	.75 BSPP	.25 BSPP	**Y**		**Y/S**	

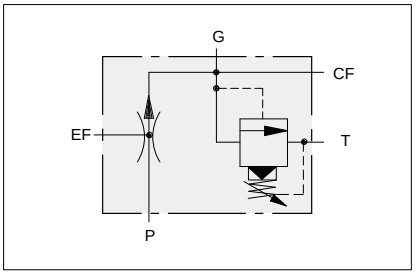

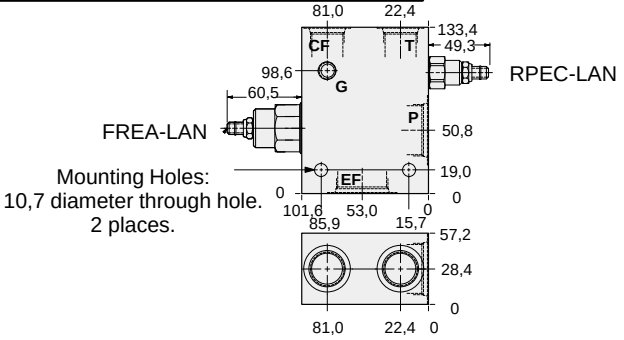

Mounting Hole Dimensions	*Ports EF & P Code 61*	*Ports CF & T Code 61*	*Gauge Port*	ALUMINIUM		SG IRON	
				Port Code	*List Price*	*Port Code*	*List Price*
Inch	1.00”	1.00”	.25 NPTF	**P**		**P/S**	
Metric	1.00”	1.00”	.25 BSPP	**P/M**		**P/T**	
Inch	1.25”	1.00”	.25 NPTF	**Q**		**Q/S**	
Metric	1.25”	1.00”	.25 BSPP	**Q/M**		**Q/T**	

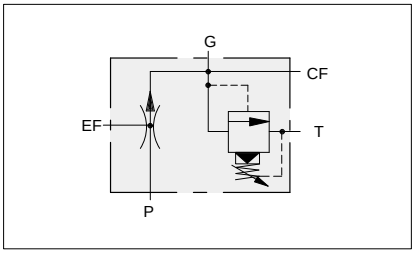

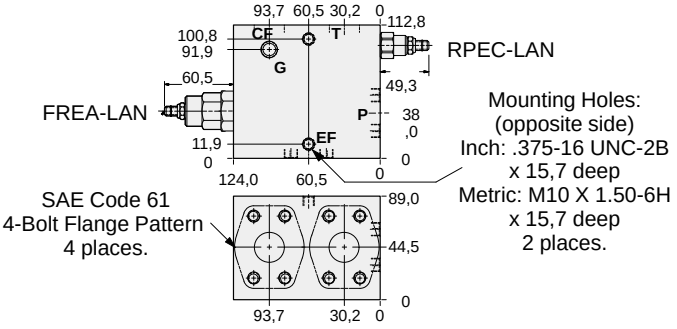

OPTIONS

YRFF – LAN – **

FLOW ADJUSTMENT

L Tuning Adjust

X Non–adjustable

For Viton Seals Change LAN to LAV.

Customer Specified Setting Stamped on Hex

PORTS

See Chart above

⊗ ***Customer must specify flow. 0,8 to 95 L/min***

PRESSURE–COMPENSATED PRIORITY FLOW CONTROL ASSEMBLY WITH RELIEF ON CONTROLLED FLOW PORT

Customer Must Specify Flow ⊗

- Aluminium rated to 210 bar and SG Iron rated to 350 bar.

YRHF: Up to 200 L/min Priority Flow.

Mounting Hole Dimensions	*Ports EF & P Code 61*	*Ports CF & T Code 61*	*Gauge Port*	**ALUMINIUM**		**SG IRON**	
				Port Code	*List Price*	*Port Code*	*List Price*
Inch	2.00”	1.50”	.25 NPTF	**S**		**S/S**	
Metric	2.00”	1.50”	.25 BSPP	**S/M**		**S/T**	

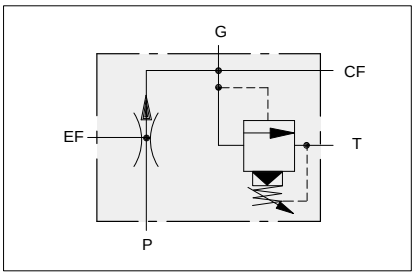

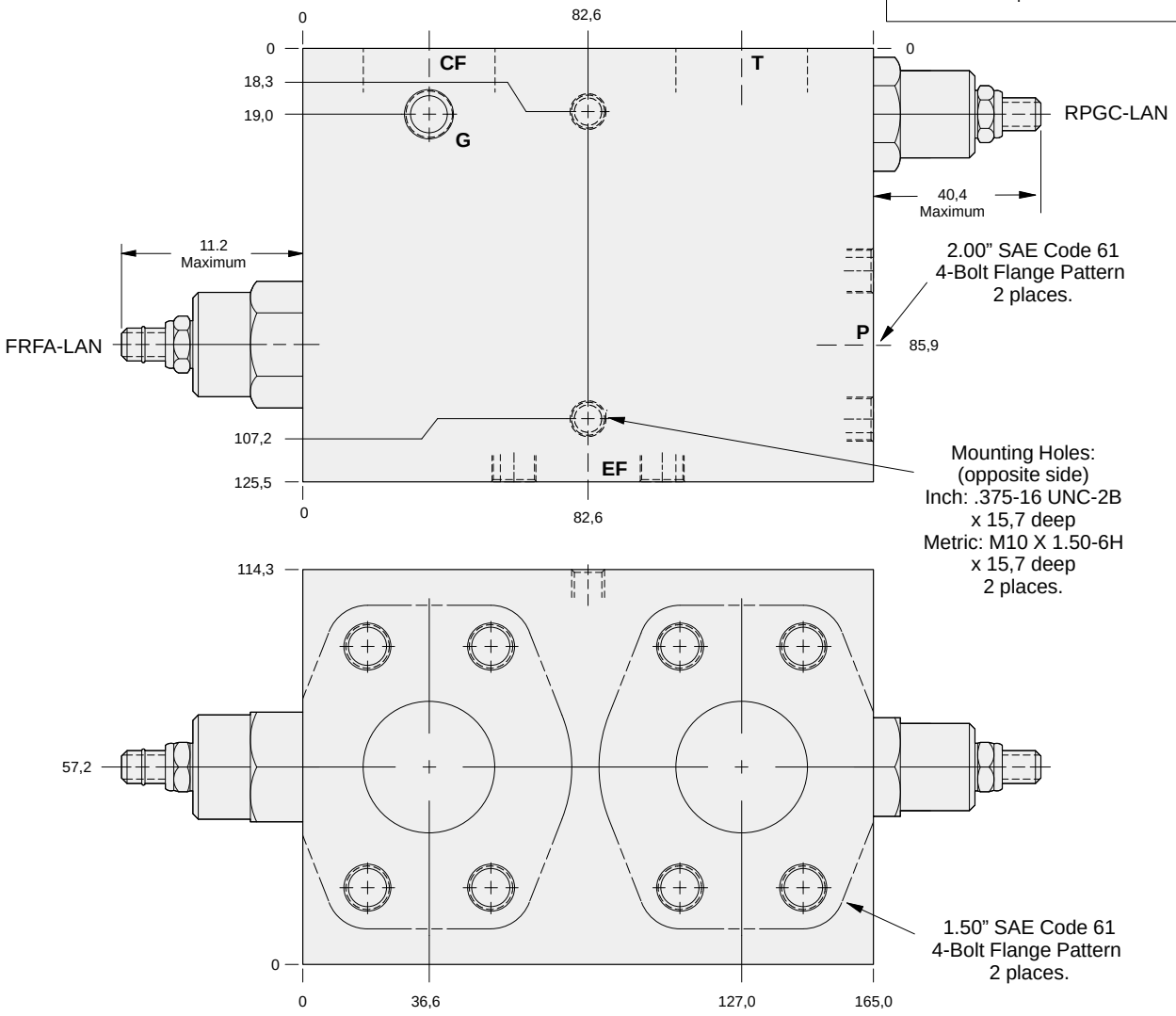

13

OPTIONS

YRHF – LAN – * *

FLOW ADJUSTMENT

L Tuning Adjust

X Non–adjustable

For Viton Seals Change LAN to LAV.

Customer Specified Setting Stamped on Hex

PORTS

See Chart above

⊗ ***Customer must specify flow. 0,8 to 200 L/min***

Over 40 New Products in this Catalogue

Relief Cartridge Valves

Page 9: The **RP*S** is a seated style pilot operated relief valve. This provides reduced leakage, faster response and a reduced pressure overshoot to give improved pressure control.

Page 10: The **RPGT** is a "soft start" relief valve available in series 2 only providing a pressure ramping over 300 milliseconds when it opens to provide excellent pressure protection and reduce shock.

Page 13: The **RBAP** is an electro-proportional, direct acting pilot relief valve that fits into the Sun T-8A cavity. It can be used as a pilot valve on it's own or together with many types of main stage pressure control valves that have the T-8A cavity in the end of the cartridge.

Page 14: The **RP*C-8** is a normally closed spool type modulating valve, with a T-8A cavity in the end. This would enable any of the Sun pilot valves, such as the RBAP proportional valve, to be fitted into the end to make a high capacity proportional relief valve.

Page 15: The **RP*S-8** is a seated style normally closed modulating valve, with a T-8A cavity in the end. This would enable any of the Sun pilot valves, such as the RBAP proportional valve, to be fitted into the end to make a proportional relief valve with low leakage on the main stage.

Page 18: The **RV*S** is a ventable, seated style, pilot operated relief valve. This provides reduced leakage, faster response and a reduced pressure overshoot to give improved pressure control.

Page 20: The **RV*D-8** is a normally closed, balanced piston, modulating element with a T-8A cavity in the end. The cartridge is ventable and also has an external drain connection. This would enable any Sun pilot valve, such as the RBAP proportional valve, to be fitted into the end to make a ventable proportional relief with separate drain port.

Sequence Cartridge Valves

Page 23: The **RSDC-8** is a normally closed, balanced piston, modulating element with a T-8A cavity in the end and external drain. This would enable any Sun pilot valve such as the RBAP proportional valve to be fitted into the end to make a relief valve with separate pilot drain.

Reducing/Relieving Cartridge Valves

Page 37: The **PB*B-8** is a normally open modulating element with a T-8A cavity in the end. This would enable any Sun pilot valve such as the RBAP proportional valve to be fitted to make a proportional pressure reducing valve.

Page 38: The **PP*B-8** is a normally open modulating element with a T-8A cavity in the end. This would enable any Sun pilot such as the RBAP proportional valve to be fitted into the end to make a proportional pressure reducing/ relieving valve.

Page 39: The **PV*A-8** is a normally open modulating element with a T-8A cavity in the end and an external drain. This would enable any Sun pilot valve, such as the RBAP proportional valve, to be fitted into the end to make a proportional pressure reducing/relieving valve with external drain.

Page 40 and 41: The **PRD*** is an electro-proportional, direct acting, pressure reducing/relieving valve available in series 1 only. There are two versions available, one with low leakage and the other with higher leakage and improved response.

Flow Control Cartridge Valves

Page 73: The **FPCC** is an electro-proportional, normally closed throttle valve available in series 1 only. It provides some pressure compensation but needs a separate compensator for more accurate control.

Page 74: The **FPCH** is an electro-proportional, normally open throttle valve available in series 1 only. It provides some pressure compensation but needs a separate compensator for more accurate control.

Priority Flow Control Cartridge Valves

Page 78: The **FV*A-8** is a ventable, fixed orifice, priority flow control valve with a T-8A cavity in the end of the cartridge. This enables a Sun pilot solenoid, pneumatic or manual valve to be fitted into the cartridge to select the priority flow condition or bypass all flow to tank.

Logic Elements

Page 89: The **LO**-8** is a poppet type, spring biased closed, pilot-to-close unbalanced logic valve with a T-8A cavity in the end of the cartridge. This enables a Sun pilot solenoid, pneumatic or manual valve to be fitted into the cartridge to select the valve in the open or closed condition.

Page 95: The **DO*R**-8 is a poppet type, pilot-to-close, normally open balanced logic valve with a T-8A cavity in the end of the cartridge. This enables a Sun pilot solenoid, pneumatic or manual valve to be fitted into the cartridge to select the valve in the open or closed condition.

Page 100: The **DK*R-8** is a poppet type, pilot-to-open, normally closed balanced logic valve with a T-8A cavity in the end of the cartridge. This enables a Sun pilot solenoid, pneumatic or manual valve to be fitted into the cartridge to select the valve in the open or closed condition.

Over 40 New Products in this Catalogue

Directional Cartridge Valves

Page 105: The **DRBO** is direct acting, externally drained, normally closed, three-way directional valve in series 1 only. It is available with an adjustment on the pressure at which the valve will switch.

Page 105: The **DRBP** is direct acting, externally drained, normally open, three-way directional valve in series 1 only. The valve is available with an adjustment on the pressure at which the valve will switch.

Page 105: The **DRBR** is a direct acting, internally drained, externally piloted, three-way directional valve in series 1 only. The valve is available with an adjustment on the pressure at which the valve will switch.

Page 106: The **DV*A-8** is a direct acting, normally open, two-way directional valve with a T-8A cavity in the end. This enables a Sun pilot solenoid, pneumatic or manual valve to be fitted into the cartridge to select the valve in the open or closed condition.

Page 106: The **DV*B-8** is a direct acting, normally closed, two-way directional valve with a T-8A cavity in the end. This enables a Sun pilot solenoid, pneumatic or manual valve to be fitted into the cartridge to select the valve in the open or closed condition.

Page 106: The **DV*C-8** is a direct acting, three-way directional valve with Port 1 blocked and a T-8A cavity in the end. This enables a Sun pilot solenoid, pneumatic or manual valve to be fitted into the cartridge to select the valve in the open or closed condition.

Page 106: The **DV*D-8** is a direct acting, three-way directional valve with Port 1 open and a T-8A cavity in the end. This enables a Sun pilot solenoid, pneumatic or manual valve to be fitted into the cartridge to select the valve in the open or closed condition.

Page 107: The **DV*M-8** is a vent-to-operate two-position two-way, normally open directional valve with a T-8A cavity in the end and external drain. This enables a Sun pilot solenoid, pneumatic or manual valve to be fitted into the cartridge to select the valve in the open or closed condition.

Page 107: The **DV*N-8** is a vent-to-operate two-position two-way, normally closed directional valve with a T-8A cavity in the end and external drain. This enables a Sun pilot solenoid, pneumatic or manual valve to be fitted into the cartridge to select the valve in the open or closed condition.

Page 107: The **DV*O-8** is a vent-to-operate two-position three-way directional valve with a T-8A cavity in the end and external drain. This enables a Sun pilot solenoid, pneumatic or manual valve to be fitted into the cartridge to select the valve in the open or closed condition.

Page 107: The **DV*P-8** is a vent-to-operate two-position three-way directional valve with a T-8A cavity in the end and external drain. This enables a Sun pilot solenoid, pneumatic or manual valve to be fitted into the cartridge to select the valve in the open or closed condition.

Page 108: The **DF*A-8** two-position, two-way normally closed port 1 to 2, directional valve with a T-8A cavity in the end of the cartridge. This enables a Sun pilot solenoid, pneumatic or manual valve to be fitted into the cartridge to select the valve in the open or closed condition.

Page 109: The **DF*B-8** two-position, two-way normally closed port 2 to 1, directional valve with a T-8A cavity in the end of the cartridge. This enables a Sun pilot solenoid, pneumatic or manual valve to be fitted into the cartridge to select the valve in the open or closed condition.

Pilot Control Cartridge Valves

Page 125: The **DAAM** is a manually operated, two-position, two-way pilot valve. This valve could be fitted into any cartridge with a T-8A cavity in the end to provide manual switching. Available with momentary, detented, or dual operator.

Page 129: The **DBAM** is a manually operated, two-position, three-way valve.

Circuit Savers

Page 146: The **COFO** is a 120:1 ratio, pilot to close check valve in series 2 only. This valve is specifically designed for accumulator unloading and dump circuits when the pump is not operating.

Page 152: The **DS*X** is a two-position, three-way, vent-to-shift, normally closed diverter valve. This valve could be used in parallel with flow divider valves to enable the function to be bypassed in traction drive circuits.

Page 153: The **DS*Y** is a two-position, three-way, vent-to-shift diverter valve. This valve works as a simple flow diverter valve.

Page 154: The **LHDT** is a bi-directional, normally open modulating valve in series 1 only. This valve can be used with an external orifice to provide pressure compensated flow control in both directions.

Hybrid Relief Cartridge Valves

Page 156: The **HRDA** is a dual function cartridge providing both a direct acting relief valve and check valve. The relief function is before the check valve.

Page 157: The **HRDB** is a dual function cartridge providing both a direct acting relief valve and check valve. The relief function is after the check valve.

Page 158: The **HVCA** is a dual function cartridge providing both a ventable pilot operated relief and check valve. The ventable relief function is before the check valve.

Page 159: The **HVCA-8** is a dual function cartridge providing both a normally closed modulating function and a check valve and a T-8A cavity in the end of the cartridge. This would enable a Sun pilot valve such as a pilot proportional valve to provide a proportional pressure control and check function in one cartridge.

Contents

Relief Cartridge Valves 5

Sequence Cartridge Valves 21

Reducing and Reducing/Relieving Cartridge Valves 29

Pilot Operated Check Cartridge Valves 43

Counterbalance Cartridge Valves 47

Check Cartridge Valves 59

Flow Control Cartridge Valves 65

Priority Flow Control Cartridge Valves 75

Flow Divider/Combiner Cartridge Valves 81

Logic Elements 87

Directional Cartridge Valves 101

Solenoid Operated Cartridge Valves 113

Pilot Control Cartridge Valves 121

Shuttle Cartridge Valves 135

Circuit Savers 143

Hybrid Relief Cartridge Valves 155

General Information 161

Cartridge Control Options 162
Cartridge Control Kits 163
Cavity Plugs 165
Solenoid Electrical Connector Options 167
Orifice Pressure Drop Data 168
Model Code Index 169

Warranty 176

Model Codes printed in Red are Preferred Versions of products shown in this catalogue and most readily available.

Specifications, descriptions and illustrative material contained herein were accurate as known at the time this publication was approved for printing.

Sun Hydraulics reserves the right to discontinue models at any time, or change prices, specifications or designs without notice or incurring obligation.

All rights reserved. This book, or any part thereof, may not be reproduced or transmitted in any form or by any means, electronic or mechanical, including photocopying, recording, or information storage and retrieval systems, for any purpose without the express written permission of Sun Hydraulics Corporation, 1500 West University Parkway, Sarasota, Florida, 34243, USA.

Copyright © 2004 Sun Hydraulics Corporation
Sarasota, FL 34243 USA

Printed in England

Relief Cartridge Valves

	Cartridge Type	*Page*
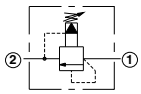	Pilot Operated, Balanced Piston	6
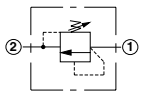	Direct Acting	7
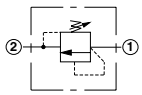	Direct Acting, Pilot Stage	8
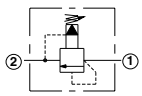	Pilot Operated, Balanced Poppet	9
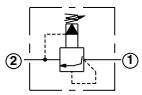	Pilot Operated, Balanced Poppet, Soft Start	10
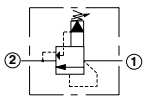	Pilot Operated, Kick-down	11
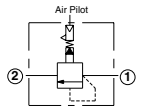	Pilot Operated, Balanced Piston, Air Controlled	12
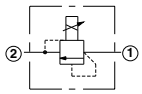	Electro-proportional Pilot	13
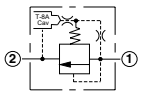	Balanced Piston, Modulating Element with Integral Pilot Control Cavity	14
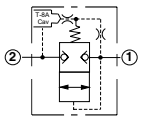	Balanced Poppet, Modulating Element with Integral Pilot Control Cavity	15
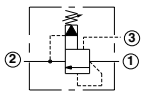	Ventable, Pilot Operated, Balanced Piston	16
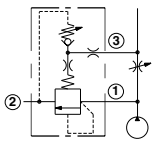	Modulating Element with Relief Function	17
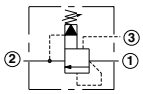	Ventable, Pilot Operated, Balanced Poppet	18
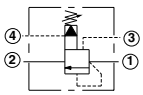	Ventable, Pilot Operated, Balanced Piston with External Drain	19
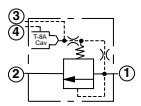	Ventable, Balanced Piston, Modulating Element with External Drain and Integral Pilot Control Element	20

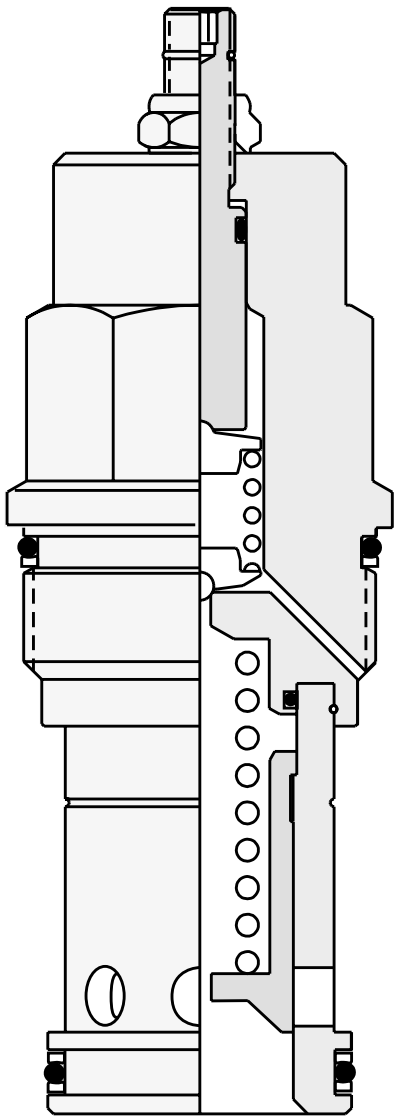

PILOT OPERATED BALANCED PISTON,

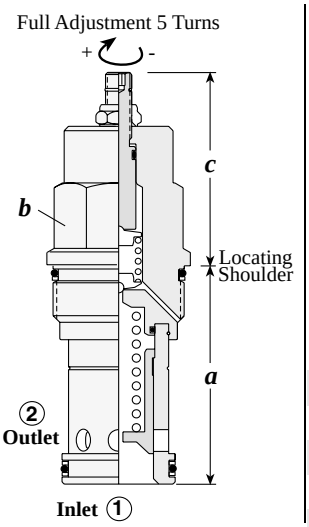

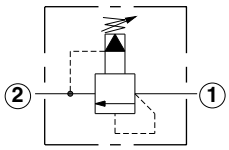

Capacity	*Typical Cartridge Model Code*	*Cavity*	*Cartridge Dimensions*					*Installation Torque (Nm)*
			a	*b*	*c*			
					L	C	K	
45 L/min.	**RPCC – LAN**	T - 162A	31	19,1	54	56	59	35/40
95 L/min.	**RPEC – LAN**	T - 10A	39,7	22,2	51	53	58	40/50
200 L/min.	**RPGC – LAN**	T - 3A	47,8	28,6	54	56	61	60/70
380 L/min.	**RPIC – LAN**	T - 16A	61,9	31,8	62	64	69	200/215
760 L/min.	**RPKC – LAN**	T - 18A	79,4	41,3	72	74	78	465/500

Performance Curves

RPCC **RPEC** **RPGC** **RPIC** **RPKC**

Typical Pressure Rise

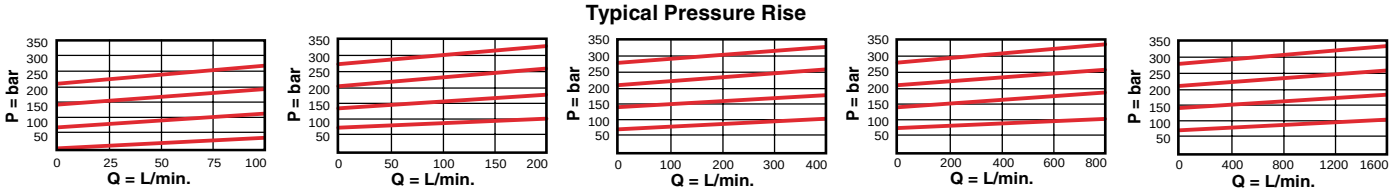

- Maximum operating pressure = 350 bar
- Will accept maximum pressure at Port 2
- Back pressure on the tank port (port 2) is directly additive at a 1:1 ratio to the valve setting
- Factory pressure settings established at 15 L/min.
- Typical response time 10 ms.
- Maximum leakage = RPCC, RPEC: 32,8 cc/min./70 bar, RPGC: 49,2 cc/min./70 bar, RPIC: 66,5 cc/min./70 bar, RPKC: 81,9 cc/min./70 bar
- RPCC minimum setting for all spring ranges is 5 bar.

OPTION ORDERING INFORMATION

Model Codes printed in Red are Preferred Versions and most readily available

RP ✶ C – ✶ ✶ ✶

Nominal Capacity	*Control***	*Adjustment Range*	*Seal*
C 45 L/min.*	**L** Standard Screw	**A** 7 - 210 bar	**N** Buna-N
E 95 L/min.	**C** Tamper Resistant	**B** 3,5 - 105 bar	**V** Viton
G 200 L/min.	**K** Handknob	**C** 10 - 420 bar	
I 380 L/min.		**N** 4 - 55 bar	
K 760 L/min.		**Q** 4 - 25 bar	
		W 10 - 315 bar	

Adjustment Range Options:
A, B, C, and W are standard set at 70 bar.
N Option is standard set at 25 bar.
Q Option is standard set at 14 bar.
** Minimum setting 5 bar on all ranges.*
Customer may specify pressure setting.

*** See page 162 for information on Control Options*

Visit www.sunhydraulics.com for detailed and complete technical information on our full line of products.

DIRECT ACTING

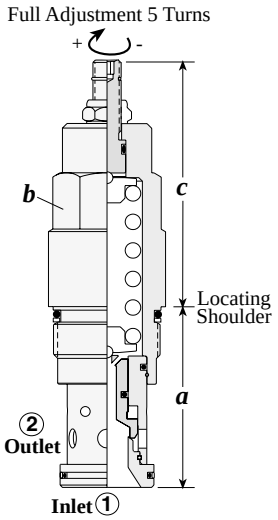

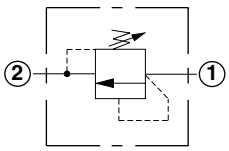

Capacity	Typical Cartridge Model Code	Cavity	Cartridge Dimensions a	Cartridge Dimensions b	Cartridge Dimensions c L	Cartridge Dimensions c C	Installation Torque (Nm)
45 L/min.	**RDBA – LAN**	T - 162A	31	19,1	54	56	35/40
95 L/min.	**RDDA – LAN**	T - 10A	39,7	22,2	61	63	40/50
200 L/min.	**RDFA – LAN**	T - 3A	47,8	28,6	64	66	60/70
380 L/min.	**RDHA – LAN**	T - 16A	61,9	31,8	83	85	200/215
760 L/min.	**RDJA – LAN**	T - 18A	79,4	41,3	100	104	465/500

Performance Curves

RDBA **RDDA** **RDFA** **RDHA** **RDJA**

Typical Pressure Rise

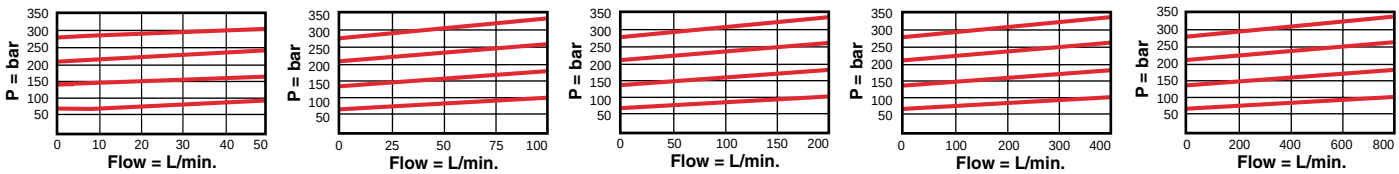

- Maximum operating pressure = 350 bar
- Cannot be adjusted with pressure at Port 1.
- Will accept maximum pressure at Port 2.
- Back pressure on the tank port (port 2) is directly additive at a 1:1 ratio to the valve setting.
- Factory pressure settings established at 15 L/min.
- Typical response time 2 ms.
- Maximum leakage = 0,7 cc/min. at reseat.
- Reseat exceeds 90% of cracking pressure.

OPTION ORDERING INFORMATION

Model Codes printed in Red are Preferred Versions and most readily available

RD ✶ A – ✶ ✶ ✶

Nominal Capacity

- **B** 45 L/min.
- **D** 95 L/min.
- **F** 200 L/min.
- **H** 380 L/min.
- **J** 760 L/min.

Control**

- **L** Standard Screw
- **C** Tamper Resistant

Adjustment Range

- **A** 35 - 210 bar
- **B** 20 - 105 bar
- **C** 70 - 420 bar
- **D** 14 - 55 bar
- **E** 7 - 25 bar
- **S** 3,5 - 14 bar
- **W** 70 - 315 bar

Seal

- **N** Buna-N
- **V** Viton

Adjustment Range Options:
A, B, C, and W are standard set at 70 bar.
D Option is standard set at 25 bar.
E Option is standard set at 14 bar.
S Option is standard set at 7 bar.
Customer may specify pressure setting.

U.S. Patent #4,742,846
European Patent Pending

** *See page 162 for information on Control Options*

Visit www.sunhydraulics.com for detailed and complete technical information on our full line of products.

DIRECT ACTING, PILOT STAGE

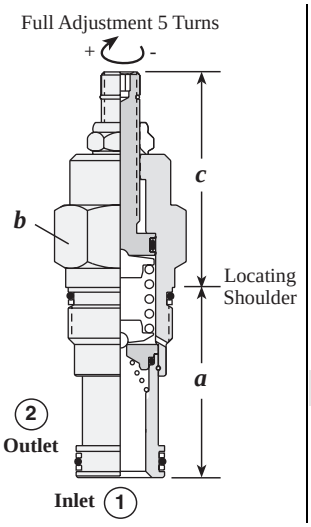

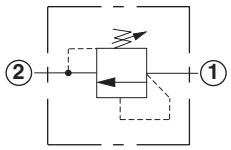

Capacity	*Typical Cartridge Model Code*	*Cavity*	*Cartridge Dimensions*					*Installation Torque (Nm)*
			a	*b*	*c*			
					L	C	K	
1 L/min.	**RBAC – LAN**	T - 10A	39,7	22,2	51	53	58	40/50
2 L/min.	**RBAA – LAN**	T - 3A	47,8	28,6	54	56	61	60/70

Performance Curves

RBAC **RBAA**

Typical Pressure Rise

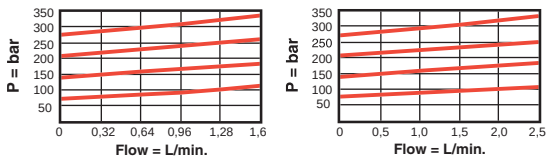

- Maximum operating pressure = 350 bar
- Typical response time 2 ms.
- Maximum leakage less than 0,4 cc/min.
- Back pressure on the tank port (port 2) is directly additive at a 1:1 ratio to the valve setting

OPTION ORDERING INFORMATION

Model Codes printed in Red are Preferred Versions and most readily available

RB A ★ – ★ ★ ★

Nominal Capacity	*Control***	*Adjustment Range*	*Seal*
C 1 L/min.	**L** Standard Screw	**A** 2 - 210 bar	**N** Buna-N
A 2 L/min.	**C** Tamper Resistant	**B** 2 - 105 bar	**V** Viton
	K Handknob	**C** 2 - 420 bar	
		D 2 - 55 bar	
		E 2 - 25 bar	
		W 2 - 315 bar	

** *See page 162 for information on Control Options*

Adjustment Range Options:
A, B, C, and W are standard set at 70 bar.
D Option is standard set at 25 bar.
E Option is standard set at 14 bar.
Customer may specify pressure setting.

PILOT OPERATED, BALANCED POPPET

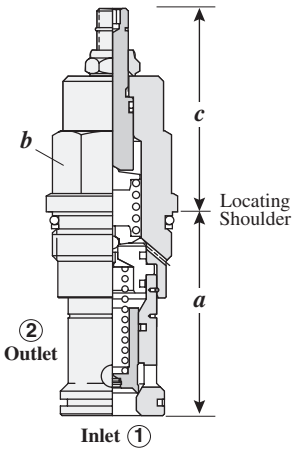

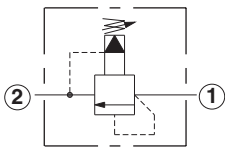

Capacity	*Typical Cartridge Model Code*	*Cavity*	*Cartridge Dimensions* *a*	*b*	*c* L	*c* C	*Installation Torque (Nm)*
200 L/min	**RPGS – LAN**	T - 3A	47,8	28,6	54	55	60/70
380 L/min.	**RPIS – LAN**	T - 16A	61,9	31,8	62,0	62,0	200/215

Performance Curves

RPGS **RPIS**

Typical Pressure Rise

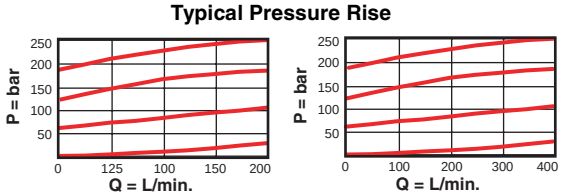

- Maximum operating pressure = 350 bar
- Maximum leakage 0,7 cc/min. at reseat
- Reseat exceeds 90% of cracking pressure.
- Factory pressure settings established at 15 L/min.
- Typical response time 10 ms.
- Back pressure on the tank port (port 2) is directly additive at a 1:1 ratio to the valve setting

OPTION ORDERING INFORMATION

Model Codes printed in Red are Preferred Versions and most readily available

RP ✶ S – ✶ ✶ ✶

Nominal Capacity	*Control***	*Adjustment Range*	*Seal*
G 200 L/min.	**C** Tamper Resistant Factory Set	**A** 7 - 210 bar	**N** Buna-N
I 380 L/min.	**K** Handknob	**B** 3,5 - 105 bar	**V** Viton
	L Standard Screw Adjustment	**C** 10 - 420 bar	
		N 4 - 55 bar	
		Q 4 - 25 bar	
		W 7 - 315 bar	

Adjustment Range Options:
A, B, C, and W are standard set at 70 bar.
N Option is standard set at 25 bar.
Q Option is standard set at 14 bar.
Customer may specify pressure setting.

** *See page 162 for information on Control Options*

Visit www.sunhydraulics.com for detailed and complete technical information on our full line of products.

PILOT OPERATED, BALANCED POPPET, SOFT START

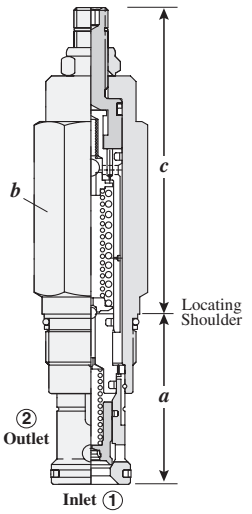

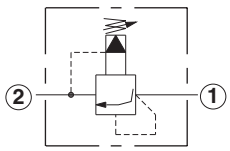

Capacity	*Typical Cartridge Model Code*	*Cavity*	*Cartridge Dimensions* *a*	*b*	*c* L	*c* C	*Installation Torque (Nm)*
200 l/min.	**RPGT - LAN**	T - 3A	47,8	28,6	85,8	88,1	60/70

Performance Curves

RPGT

Typical Pressure Rise

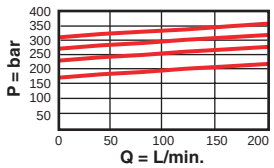

Typical Ramp Time

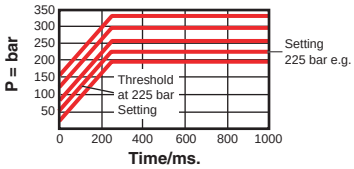

- Maximum operating pressure = 350 bar
- Will accept maximum pressure at Port 2.
- Factory pressure settings established at 15 L/min.
- Shifting time from minimum to maximum setting 250 ms.
- Control pilot flow = 0,16 to 0,41 L/min.

OPTION ORDERING INFORMATION **Model Codes printed in Red are Preferred Versions and most readily available**

RP G T – ★ ★ ★

Nominal Capacity

G 200 L/min.

Control**

C Tamper Resistant Factory Set

L Standard Screw Adjustment

Adjustment Range

A 140 - 210 bar

C 315 - 420 bar

W 210-315 bar

Seal

N Buna-N

V Viton

Patents:
U.S. #6,039,070;
Germany EP 1 001 197;
Japan #3,119,230

*** See page 162 for information on Control Options*

Adjustment Range Options:
A is standard set at 140 bar.
C is standard set at 315 bar.
W is standard set at 210 bar.
Customer may specify pressure setting.

Visit www.sunhydraulics.com for detailed and complete technical information on our full line of products.

PILOT OPERATED, KICK-DOWN

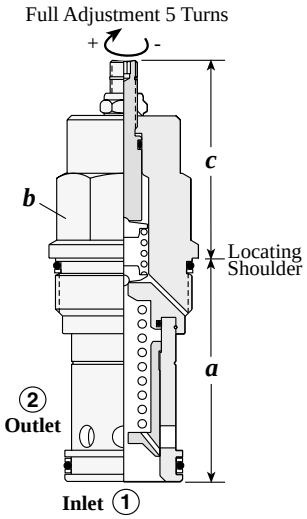

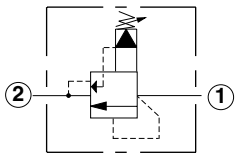

Capacity	Typical Cartridge Model Code	Cavity	Cartridge Dimensions a	b	c L	c C	c K	Installation Torque (Nm)
95 L/min.	**RQEB – LAN**	T - 10A	39,7	22,2	51	53	58	40/50
200 L/min.	**RQGB – LAN**	T - 3A	47,8	28,6	54	56	61	60/70
380 L/min.	**RQIB – LAN**	T - 16A	61,9	31,8	62	64	69	200/215
760 L/min.	**RQKB – LAN**	T - 18A	79,4	41,3	72	74	78	465/500

Performance Curves

RQEB **RQGB** **RQIB** **RQKB**

Unloaded Pressure Drop

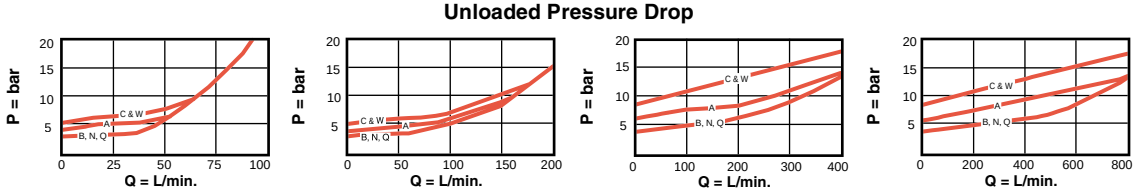

- Maximum operating pressure = 350 bar
- Will accept maximum pressure at Port 2.
- Flow through cartridge must cease to reset valve.
- Back pressure on the tank port (port 2) is directly additive at a 1:1 ratio to the valve setting
- Factory pressure settings established at kick down point.
- Typical response time 25 ms.
- Maximum leakage = RQEB: 32,8 cc/min./70 bar, RQGB: 49,2 cc/min./70 bar, RQIB: 65,5 cc/min./70 bar, RQKB: 81,9 cc/min./70 bar

OPTION ORDERING INFORMATION

Model Codes printed in Red are Preferred Versions and most readily available

RQ ★ B – ★ ★ ★

Nominal Capacity	*Control***	*Adjustment Range*	*Seal*
E 95 L/min.	**L** Standard Screw	**A** 7 - 210 bar	**N** Buna-N
G 200 L/min.	**C** Tamper Resistant	**B** 3,5 - 105 bar	**V** Viton
I 380 L/min.	**K** Handknob	**C** 10 - 420 bar	
K 760 L/min.		**N** 4 - 55 bar	
		Q 4 - 25 bar	
		W 10 - 315 bar	

*** See page 162 for information on Control Options*

Adjustment Range Options:
A, B, C, and W are standard set at 70 bar.
N Option is standard set at 25 bar.
Q Option is standard set at 14 bar.
Customer may specify pressure setting.

Visit www.sunhydraulics.com for detailed and complete technical information on our full line of products.

PILOT OPERATED, BALANCED PISTON, AIR CONTROLLED

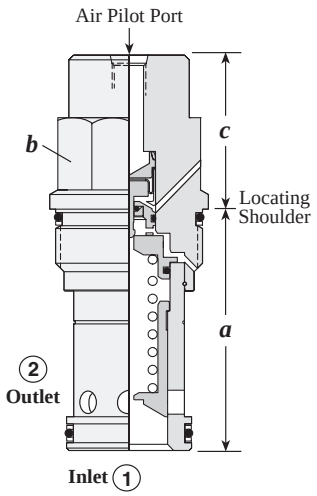

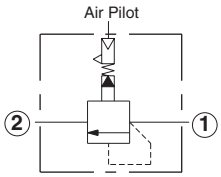

Capacity	*Typical Cartridge Model Code*	*Cavity*	*Cartridge Dimensions* *a*	*b*	*c* A	*c* B	*Installation Torque (Nm)*
200 L/min.	**RPGD – ABN**	T - 3A	47,8	28,6	34	-	60/70
380 L/min.	**RPID – BBN**	T - 16A	61,9	31,8	-	42	200/215
760 L/min.	**RPKD – BBN**	T - 18A	79.4	41,3	-	51	465/500

Performance Curves

RPGD **RPID** **RPKD**

Typical Pressure Rise

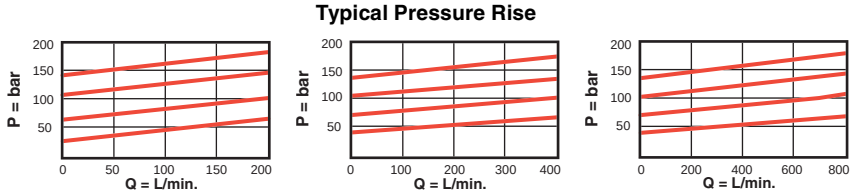

- Maximum operating pressure = 140 bar
- Will accept maximum pressure at Port 2.
- Maximum air pressure should not exceed 10 bar.
- Pilot ratio, air to hydraulic = 1:20
- Typical response time 10 ms.
- Maximum leakage = RPGD: 49,2 cc/min./70 bar, RPID: 65,5 cc/min./70 bar, RPKD: 81,9 cc/min./70 bar.

OPTION ORDERING INFORMATION

Model Codes printed in Red are Preferred Versions and most readily available

RP ✶ D – ✶ ✶ ✶

Nominal Capacity

G 200 L/min.

I 380 L/min.

K 760 L/min.

Control

Available for RPGD only

A 1/4" NPTF Pilot Port at end of Cartridge*

Available for RPID, RPKD only

B SAE-4 Pilot Port at end of Cartridge*

* *Maximum air pilot pressure should not exceed 10 bar.*

Adjustment Range

B 3,5 - 105 bar

Seal

N Buna-N

V Viton

Visit www.sunhydraulics.com for detailed and complete technical information on our full line of products.

ELECTRO-PROPORTIONAL PILOT

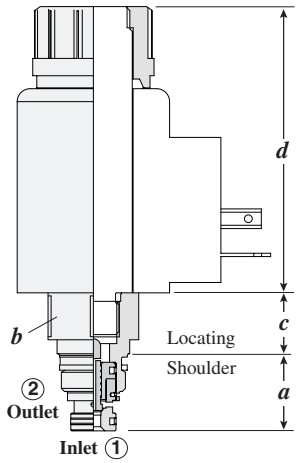

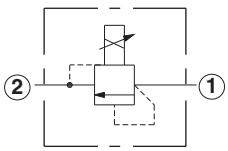

Capacity	Typical Cartridge Model Code	Cavity	Cartridge Dimensions a	b	c	d	Installation Torque (Nm)
1 L/min.	**RBAP – MAN**	T - 8A	18,8	22,2	15,0	70,1	35/40

Performance Curves

RBAP

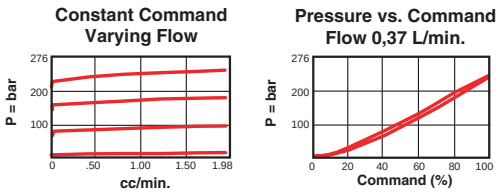

- Maximum operating pressure = 350 bar
- Maximum leakage = 24,6 cc/min at reseat
- Back pressure on the tank port (port 2) is directly additive at a 1:1 ratio to the valve setting
- Reseat exceeds 85% of crack
- Hysteresis with dither <4%
- Hysteresis with DC input <8%
- Linearity with dither <2%
- For optimum performance, an amplifier with current sensing and adjustable dither should be used. Dither should be adjustable between 100 - 250 Hz.

OPTION ORDERING INFORMATION

Model Codes printed in Red are Preferred Versions and most readily available

RB A P – ★ ★ ★

Nominal Capacity	*Control*	*Adjustment Range*	*Seal*
A 1 L/min.	**M** Manual Override (Standard)	**A** 20 - 210 bar	**N** Buna-N
		B 10 - 105 bar	**V** Viton
	NOTE: Coil must be ordered separately. Use 12V DC or 24V DC (Series 770-*) coils only. See page 167.**	**W** 35 - 350 bar	

Visit www.sunhydraulics.com for detailed and complete technical information on our full line of products.

BALANCED PISTON, MODULATING ELEMENT WITH INTEGRAL PILOT CONTROL CAVITY

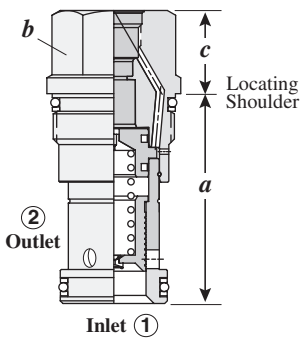

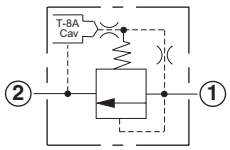

The -8 control option allows a pilot control valve to be incorporated directly into the end of the modulating element via the T-8A cavity. These pilot control cartridges are sold separately and include electro-proportional, solenoid, air pilot, and hydraulic pilot operation. See Pilot Control Cartridges on page 121.

Capacity	*Typical Cartridge Model Code*	*Cavity*	*Cartridge Dimensions*			*Installation Torque (Nm)*
			a	*b*	*c*	
95 L/min.	**RPEC – 8WN**	T - 10A	39,7	22,2	22,2	40/50
190 L/min.	**RPGC – 8WN**	T - 3A	47,8	28,6	22,2	60/70
380 L/min.	**RPIC – 8WN**	T - 16A	61,9	31,8	31,8	200/215
760 L/min.	**RPKC – 8WN**	T - 18A	79,9	41,3	41,3	465/500

Performance Curves

RPEC-8 **RPGC-8** **RPIC-8** **RPKC-8**

Pressure vs. Flow

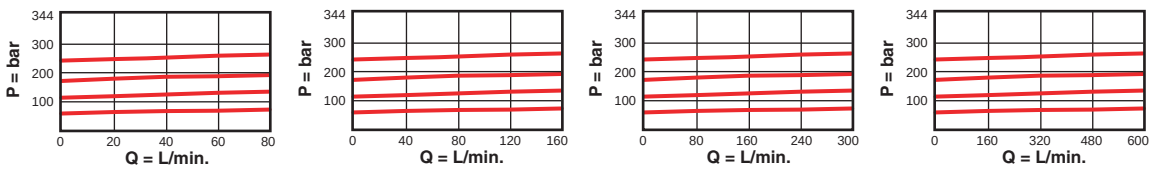

- Maximum operating pressure = 350 bar
- Will accept maximum pressure at Port 2.
- Back pressure on the tank port (port 2) is directly additive at a 1:1 ratio to the valve setting
- Control pilot flow = RPEC-8: 0,11 to 0,16 L/min., RPGC-8: 0,16 to 0,25 L/min., RPIC-8, RPKC-8: 0,25 to 0,33 L/min.
- Maximum leakage = RPEC-8: 32,8 cc/min/ 70 bar: RPGC-8: 49,2 cc/min./70, RPIC-8: 65,5 cc/min./70 bar, RPKC-8: 81,9 cc/min./70 bar.
- With the -8 control option, the main stage valve should first be installed to the correct torque value. The T-8A pilot control valve should then be installed into the main stage valve to its required torque value.

OPTION ORDERING INFORMATION **Model Codes printed in Red are Preferred Versions and most readily available**

RP ✶ C – 8 ✶ ✶

Nominal Capacity	*Control*	*MinimumControl Pressure*	*Seal*
E 95 L/min.	**8** T-8A Cavity in hex body for pilot operation (Pilot valve to be ordered separately)	**D** 1,7 bar	**N** Buna-N
G 200 L/min.		**W** 7 bar	**V** Viton
I 380 L/min.			
K 760 L/min.			

Visit www.sunhydraulics.com for detailed and complete technical information on our full line of products.

BALANCED POPPET, MODULATING ELEMENT WITH INTEGRAL PILOT CONTROL CAVITY

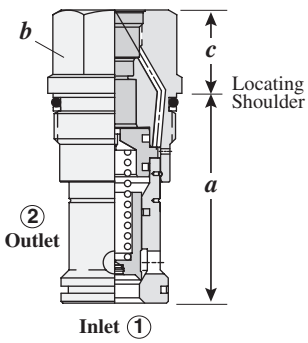

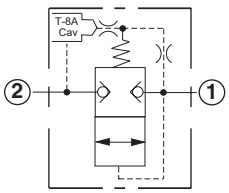

The -8 control option allows a pilot control valve to be incorporated directly into the end of the modulating element via the T-8A cavity. These pilot control cartridges are sold separately and include electro-proportional, solenoid, air pilot, and hydraulic pilot operation. See Pilot Control Cartridges on page 121.

Capacity	*Typical Cartridge Model Code*	*Cavity*	*Cartridge Dimensions*			*Installation Torque (Nm)*
			a	*b*	*c*	
200 L/min.	**RPGS – 8WN**	T - 3A	84,7	28,6	22,2	60/70
380 L/min.	**RPIS – 8WN**	T - 16A	84,7	31,8	31,8	200/215

Performance Curves

RPGS-8 **RPIS-8**

Typical Pressure Rise

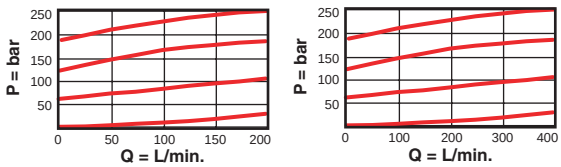

- Maximum operating pressure = 350 bar
- Will accept maximum pressure at Port 2
- Back pressure on the tank port (port 2) is directly additive at a 1:1 ratio to the valve setting.
- Typical response time 10 ms
- Control pilot flow = RPGS-8: 0,16 to 0,25 L/min., RPIS-8: 0,25 to 0,33 L/min.
- Maximum leakage = 0,7 cc/min. at reseat
- Reseat exceeds 90% of cracking pressure.
- With the -8 control option, the main stage valve should first be installed to the correct torque value. The T-8A pilot control valve should then be installed into the main stage valve to its required torque value.

OPTION ORDERING INFORMATION

Model Codes printed in Red are Preferred Versions and most readily available

RP ✶ S – 8 ✶ ✶

Nominal Capacity	*Control***	*MinimumControl Pressure*	*Seal*
G 200 L/min.	**8** T-8A Cavity in hex body for pilot operation (Pilot valve to be ordered separately)	**B** 3,5 bar	**N** Buna-N
I 380 L/min.		**W** 7 bar	**V** Viton

Visit www.sunhydraulics.com for detailed and complete technical information on our full line of products.

VENTABLE, PILOT OPERATED, BALANCED PISTON

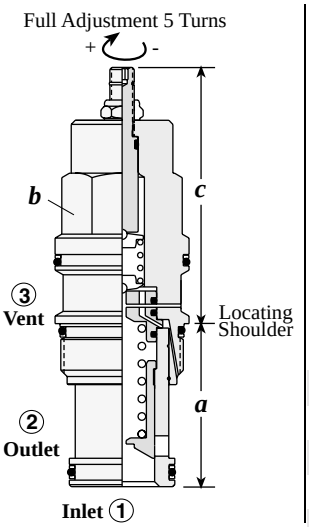

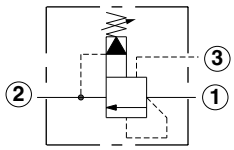

Capacity	Typical Cartridge Model Code	Cavity	Cartridge Dimensions a	b	c L	c C	c K	Installation Torque (Nm)
30 L/min.	**RVBA – LAN**	T - 163A	31	19,1	65	67	71	35/40
60 L/min.	**RVCA – LAN**	T - 11A	34,9	22,2	64	66	70	40/50
120 L/min.	**RVEA – LAN**	T - 2A	34,9	28,6	72	74	78	60/70
240 L/min.	**RVGA – LAN**	T - 17A	46	31,8	84	86	90	200/215
480 L/min.	**RVIA – LAN**	T - 19A	63,5	41,3	100	104	107	465/500

Performance Curves

RVBA **RVCA** **RVEA** **RVGA** **RVIA**

Typical Pressure Rise

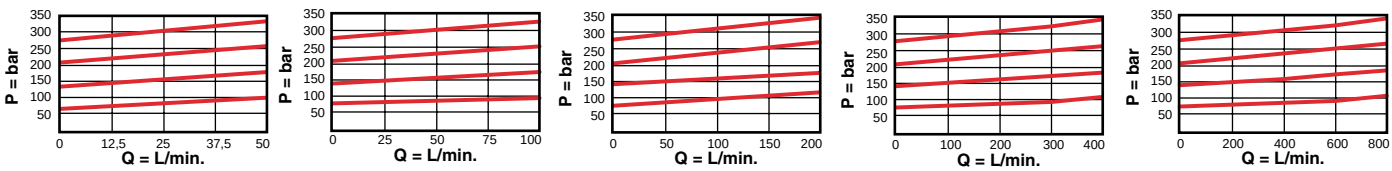

- Maximum operating pressure = 350 bar
- Pressure at port 3 (vent) controls the valve below its setting.
- Back pressure on the tank port (port 2) is directly additive at a 1:1 ratio to the valve setting.
- Control pilot flow = RVBA, RVCA: 0,11 L/min. to 0,16 L/min.; RVEA: 0,16 L/min. to 0,25 L/min.; RVGA, RVIA: 0,25 L/min. to 0,33 L/min.
- Factory pressure setting established at 15 L/min.
- Typical response time 10 ms.
- Maximum leakage = RVBA, RVCA: 32,8 cc/min/70 bar, RVEA: 49,2 cc/min/70 bar, RVGA: 65,5 cc/min/70 bar, RVIA: 81,9 cc/min/70 bar.
- RVBA minimum setting for all spring ranges is 5 bar.
- Will accept maximum pressure at port 2.

OPTION ORDERING INFORMATION

Model Codes printed in Red are Preferred Versions and most readily available

RV ★ A – ★ ★ ★

Nominal Capacity	*Control***	*Adjustment Range*	*Seal*
B 30 L/min.*	**L** Standard Screw	**A** 7 - 210 bar	**N** Buna-N
C 60 L/min.	**C** Tamper Resistant	**B** 3,5 - 105 bar	**V** Viton
E 120 L/min.	**K** Handknob	**C** 10 - 420 bar	
G 240 L/min.		**N** 4 - 55 bar	
I 480 L/min.		**Q** 4 - 25 bar	
		W 10 - 315 bar	

Adjustment Range Options:
A, B, C, and W are standard set at 70 bar.
N Option is standard set at 25 bar.
Q Option is standard set at 14 bar.

** Minimum setting 5 bar on all ranges.*
Customer may specify pressure setting.

*** See page 162 for information on Control Options*

Visit www.sunhydraulics.com for detailed and complete technical information on our full line of products.

MODULATING ELEMENT WITH RELIEF FUNCTION

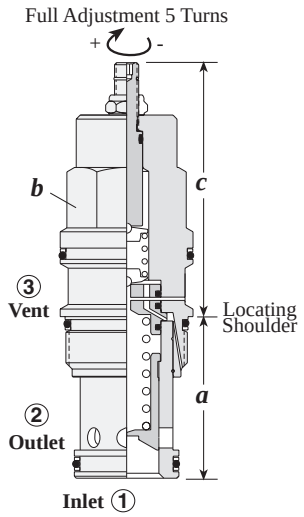

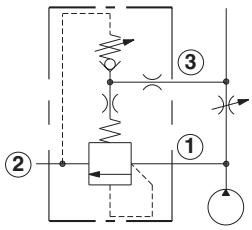

Capacity	Typical Cartridge Model Code	Cavity	Cartridge Dimensions a	b	c L	c C	c K	Installation Torque (Nm)
10 L/min.	**RVBB – LAN**	T - 163A	31	19,1	65	67	71	35/40
20 L/min.	**RVCB – LAN**	T - 11A	34,9	22,2	64	66	70	40/50
40 L/min.	**RVEB – LAN**	T - 2A	34,9	28,6	72	74	78	60/70
80 L/min.	**RVGB – LAN**	T - 17A	46	31,8	84	86	90	200/215
160 L/min.	**RVIB – LAN**	T - 19A	63,5	41,3	100	104	107	465/500

Performance Curves

RVBB **RVCB** **RVEB** **RVGB** **RVIB**

Typical Compensator Differentials

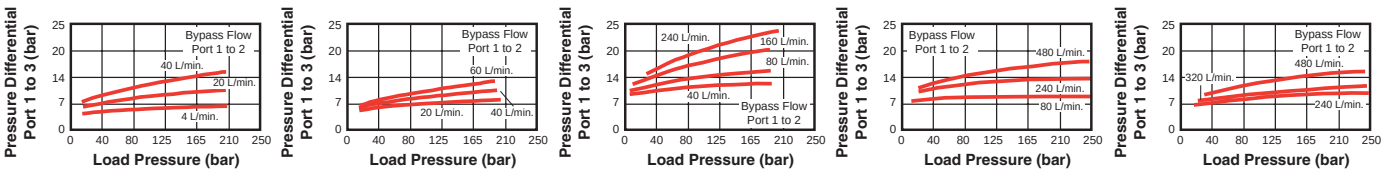

- Back pressue on the tank port (port 2) is directly additive at a 1:1 ratio to the valve setting.
- Maximum operating pressure = 350 bar
- Factory pressure setting established at 15 L/min.
- Typical response time 10 ms.
- Maximum leakage = RVBB, RVCB: 32,8 cc/min/70 bar, RVEB: 49,2 cc/min/70 bar, RVGB: 65,5 cc/min/70 bar, RVIB: 81,9 cc/min/70 bar.

OPTION ORDERING INFORMATION

Model Codes printed in Red are Preferred Versions and most readily available

RV ★ B – ★ ★ ★

Nominal Capacity	*Control***	*Adjustment Range*	*Seal*
B 10 L/min.*	**L** Standard Screw	**A** 7 - 210 bar	**N** Buna-N
C 20 L/min.	**C** Tamper Resistant	**B** 7 - 105 bar**	**V** Viton
E 40 L/min.	**K** Handknob	**C** 7 - 420 bar	
G 80 L/min.			
I 160 L/min.			

** For RVCB, the bias pressure is 4 bar.*

Adjustment Range Options:
A, B, and C are standard set at 70 bar.
** Minimum setting 7 bar on all ranges.*
Customer may specify pressure setting.

*** See page 162 for information on Control Options*

Visit www.sunhydraulics.com for detailed and complete technical information on our full line of products.

VENTABLE, PILOT OPERATED, BALANCED POPPET

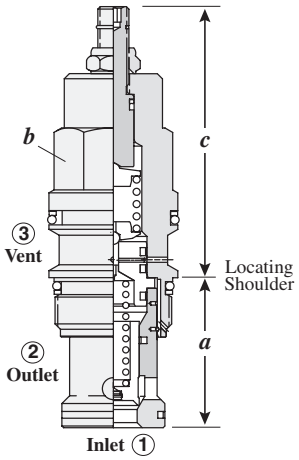

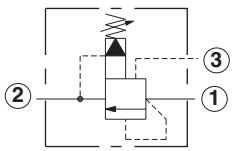

Capacity	Typical Cartridge Model Code	Cavity	Cartridge Dimensions a	b	c L	c C	c K	Installation Torque (Nm)
120 l/min.	**RVES – LAN**	T - 2A	35,0	28,6	71,0	73,0	78,0	60/70
200 l/min.	**RVGS – LAN**	T - 17A	46,0	31,8	83,3	84,1	89,7	200/215

Performance Curves

RVES

Typical Pressure Rise

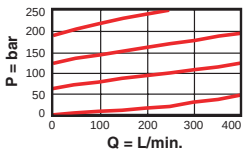

Vented Pressure

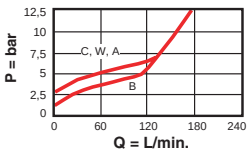

RVGS

Typical Pressure Rise

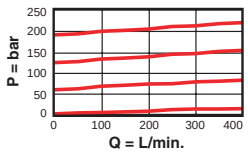

Vented Pressure

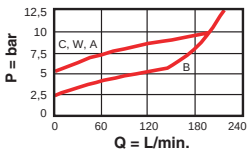

- Maximum operating pressure = 350 bar.
- Will accept maximum pressure at port 2
- Pressure at port 3 (vent) controls the valve below its setting.
- Back pressure on the tank port (port 2) is directly additive at a 1:1 ratio to the valve setting.
- Factory pressure setting established at 15 L/min.
- Maximum leakage at reseat = 0,7 cc/min.
- Reseat exceeds 90% of crack
- Typical response 10 ms
- Control pilot flow = RVES: 0,16 L/min. to 0,25 L/min; RVGS: 0,25 L/min. to 0,33 L/min

OPTION ORDERING INFORMATION

Model Codes printed in Red are Preferred Versions and most readily available

RV ✶ S – ✶ ✶ ✶

Nominal Capacity

E 30 L/min.

G 120 L/min.

Control**

C Tamper Resistant Factory Set

K Handknob

L Standard Screw Adjustment

** *See page 162 for information on Control Options*

Adjustment Range

A 7 - 210 bar

B 3,5 - 105 bar

C 10 - 420 bar

N 4 - 55 bar

Q 4 - 25 bar

W 10 - 315 bar

Adjustment Range Options:
A, B, C and W are standard set at .70 bar.
N Option is standard set at 25 bar.
Q option is standard set at 14 bar.

Customer may specify pressure settings.

Seal

N Buna-N

V Viton

Visit www.sunhydraulics.com for detailed and complete technical information on our full line of products.

VENTABLE, PILOT OPERATED, BALANCED PISTON WITH EXTERNAL DRAIN

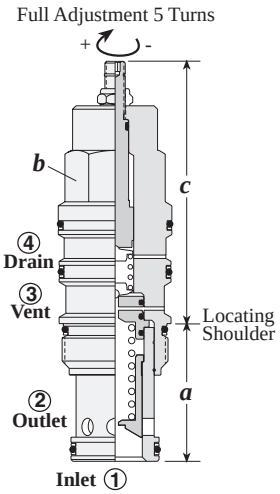

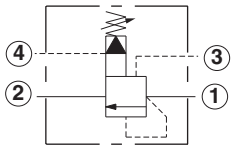

Capacity	Typical Cartridge Model Code	Cavity	Cartridge Dimensions a	b	c L	c C	c K	Installation Torque (Nm)
60 L/min.	**RVCD – LAN**	T - 21A	34,9	22,2	79	81	85	40/50
120 L/min.	**RVED – LAN**	T - 22A	34,9	28,6	88	90	94	60/70
240 L/min.	**RVGD – LAN**	T - 23A	46	31,8	100	102	107	200/215
480 L/min.	**RVID – LAN**	T - 24A	63,5	41,3	122	126	129	465/500

Performance Curves

RVCD **RVED** **RVGD** **RVID**

Vented Pressure

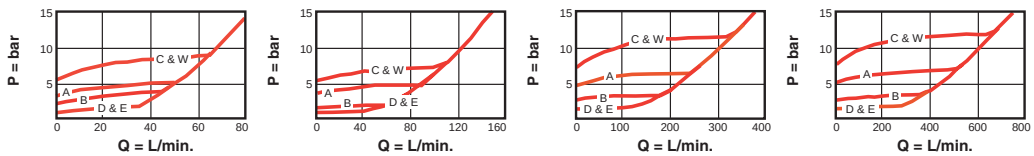

Typical Pressure Rise

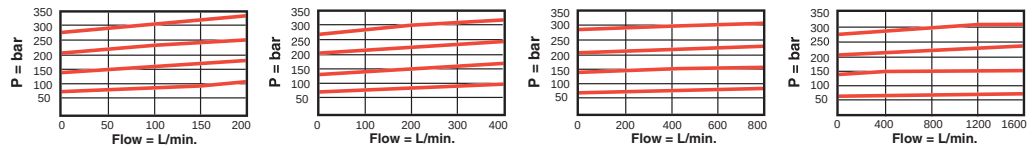

- Maximum operating pressure = 350 bar
- Pressure at port 4 is directly additive to the valve setting at a 1:1 ratio and should not exceed 350 bar
- Pressure at port 3 (vent) controls the valve below its setting.
- Control pilot flow = RVCD: 0,11 L/min. to 0,16 L/min.; RVED: 0,16 L/min. to 0,25 L/min.; RVGD, RVID: 0,25 L/min. to 0,33 L/min.
- Factory pressure setting established at 15 L/min.
- Typical response time 10 ms.
- Maximum leakage = RVCD: 32,8 cc/min/70 bar, RVED: 49,2 cc/min/70 bar, RVGD: 65,5 cc/min/70 bar, RVID: 81,9 cc/min/70 bar.

OPTION ORDERING INFORMATION

Model Codes printed in Red are Preferred Versions and most readily available

RV ✶ D – ✶ ✶ ✶

Nominal Capacity

C	60 L/min.
E	120 L/min.
G	240 L/min.
I	480 L/min.

Control**

L	Standard Screw
C	Tamper Resistant
K	Handknob

Adjustment Range

A	7 - 210 bar
B	3,5 - 105 bar
C	10 - 420 bar
D	2 - 55 bar
E	2 - 25 bar
W	10 - 315 bar

Adjustment Range Options:
A, B, C, and W are standard set at 70 bar.
D Option is standard set at 25 bar.
E Option is standard set at 14 bar.
Customer may specify pressure setting.

Seal

N	Buna-N
V	Viton

***See page 162 for information on Control Options*

Visit www.sunhydraulics.com for detailed and complete technical information on our full line of products.

VENTABLE, BALANCED PISTON, MODULATING ELEMENT WITH EXTERNAL DRAIN AND INTEGRAL PILOT CONTROL ELEMENT

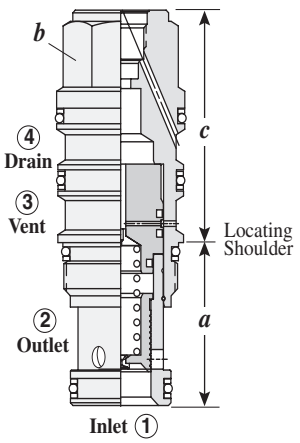

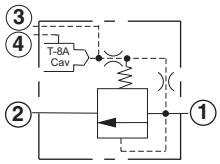

The -8 control option allows a pilot control valve to be incorporated directly into the end of the modulating element via the T-8A cavity. These pilot control cartridges are sold separately and include electro-proportional, solenoid, air pilot, and hydraulic pilot operation. See Pilot Control Cartridges on page 121.

Capacity	*Typical Cartridge Model Code*	*Cavity*	*Cartridge Dimensions*			*Installation Torque (Nm)*
			a	*b*	*c*	
60 L/min.	**RVCD – 8WN**	T - 21A	34,9	22,2	45,2	45/50
120 L/min.	**RVED – 8WN**	T - 22A	34,9	28,6	50,8	60/70
240 L/min.	**RVGD – 8WN**	T - 23A	46,0	31,8	65,8	200/215
480 L/min.	**RVID – 8WN**	T - 24A	63,5	41,3	80,3	465/500

Performance Curves

RVCD-8 **RVED-8** **RVGD-8** **RVID-8**

Vented Pressure

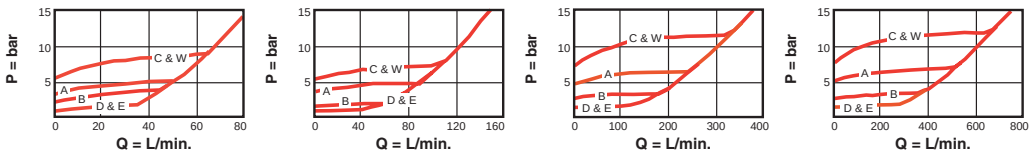

Typical Pressure Rise

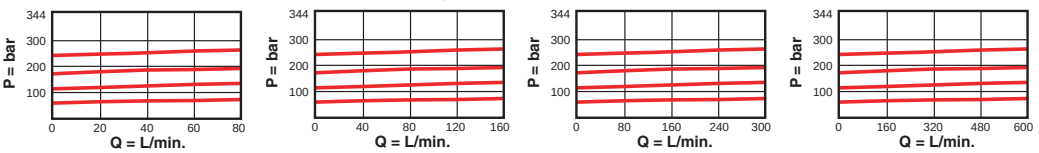

- Maximum operating pressure = 350 bar
- Pressure at port 4 is directly additive to the valve setting at a 1:1 ratio and should not exceed 350 bar
- Pressure at port 3 (vent) controls the valve below its setting.
- Control pilot flow = RVCD: 0,11 L/min. to 0,16 L/min.; RVED: 0,16 L/min. to 0,25 L/min.; RVGD, RVID: 0,25 L/min. to 0,33 L/min.
- Factory pressure setting established at 15 L/min.
- Typical response time 10 ms.
- Maximum leakage = RVCD: 32,8 cc/min/70 bar, RVED: 49,2 cc/min/70 bar, RVGD: 65,5 cc/min/70 bar, RVID: 81,9 cc/min/70 bar

OPTION ORDERING INFORMATION

Model Codes printed in Red are Preferred Versions and most readily available

RV ★ D – 8 ★ ★

Nominal Capacity	*Control*	*Minimum Control Pressure*	*Seal*
C 60 L/min.	**8** T-8A Cavity in hex body for pilot operation (Pilot valve to be ordered separately)	**D** 1,7 bar	**N** Buna-N
E 120 L/min.		**W** 7 bar	**V** Viton
G 240 L/min.			
I 480 L/min.			

Visit www.sunhydraulics.com for detailed and complete technical information on our full line of products.

Sequence Cartridge Valves

	Cartridge Type	*Page*
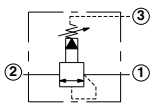	Pilot Operated, Balanced Piston	22
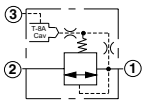	Externally Drained, Balanced Piston, Modulating Element	23
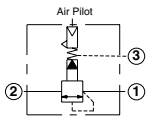	Air Controlled, Pilot Operated, Balanced Piston	24
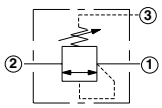	Direct Acting without Reverse Flow Check	25
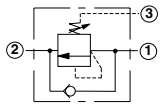	Direct Acting with Reverse Flow Check	26
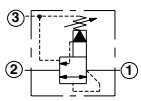	Pilot Operated, Kick-down	27

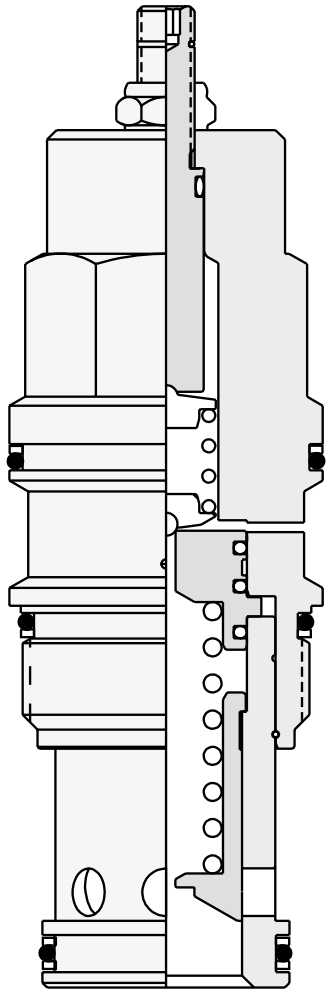

PILOT OPERATED, BALANCED PISTON

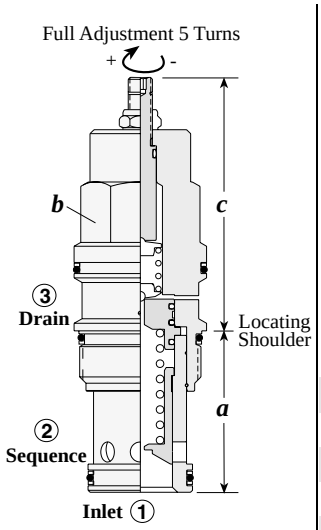

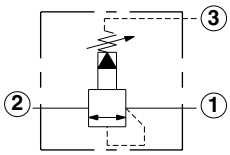

Capacity	Typical Cartridge Model Code	Cavity	Cartridge Dimensions a	b	c L	c C	c K	Installation Torque (Nm)
30 L/min.	**RSBC – LAN**	T - 163A	31	19,1	65	67	71	35/40
60 L/min.	**RSDC – LAN**	T - 11A	34,9	22,2	64	66	70	40/50
120 L/min.	**RSFC – LAN**	T - 2A	34,9	28,6	72	74	78	60/70
240 L/min.	**RSHC – LAN**	T - 17A	46	31,8	84	86	90	200/215
480 L/min.	**RSJC – LAN**	T - 19A	63,5	41,3	100	104	107	465/500

Performance Curves

RSBC **RSDC** **RSFC** **RSHC** **RSJC**

Pressure Drop Sequenced Open

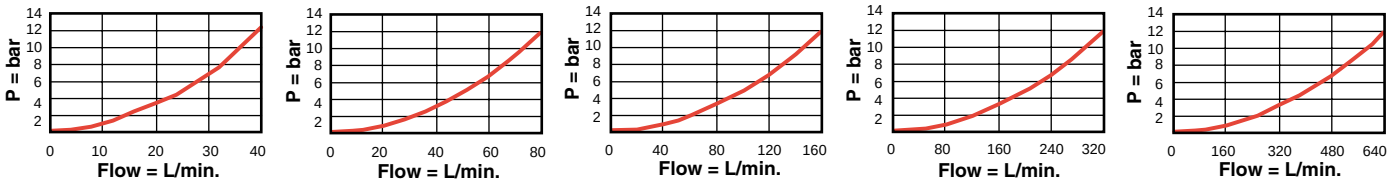

- Maximum operating pressure = 350 bar
- Maximum leakage = RSDC: 32,8 cc/min./70 bar, RSFC: 49,2 cc/min./70 bar, RSHC: 65,5 cc/min./70 bar , RSJC: 81,9 cc/min./70 bar.
- Typical response time 10 ms
- Pressure at port 3 is directly additive to the valve setting at a 1:1 ratio and should not exceed 350 bar.
- Pilot flow continues to increase as the pressure at port 1 (inlet), relative to the pressure at port 3 (drain), rises above the valve setting.
- RSBC minimum setting is 5 bar for all spring ranges.

OPTION ORDERING INFORMATION **Model Codes printed in Red are Preferred Versions and most readily available**

RS ✶ C – ✶ ✶ ✶

Nominal Capacity	*Control***	*Adjustment Range*	*Seal*
B 30 L/min.*	**L** Standard Screw	**A** 7 - 210 bar	**N** Buna-N
D 60 L/min.	**C** Tamper Resistant	**B** 3,5 - 105 bar	**V** Viton
F 120 L/min.	**K** Handknob	**C** 10 - 420 bar	
H 240 L/min.		**N** 4 - 55 bar	
J 480 L/min.		**Q** 4 - 25 bar	
		W 10 - 315 bar	

Adjustment Range Options:
A, B, C, and W are standard set at 70 bar.
N Option is standard set at 25 bar.
Q Option is standard set at 14 bar.

*** See page 162 for information on Control Options*

* *Minimum setting 5 bar on all ranges.*
Customer may specify pressure setting.

Visit www.sunhydraulics.com for detailed and complete technical information on our full line of products.

EXTERNALLY DRAINED, BALANCED PISTON, MODULATING ELEMENT

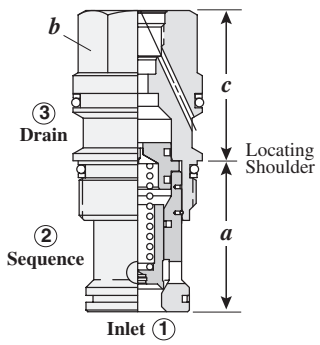

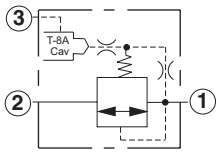

The -8 control option allows a pilot control valve to be incorporated directly into the end of the modulating element via the T-8A cavity. These pilot control cartridges are sold separately and include electro-proportional, solenoid, air pilot, and hydraulic pilot operation. See Pilot Control Cartridges on page 121.

Capacity	Typical Cartridge Model Code	Cavity	Cartridge Dimensions a	b	c	Installation Torque (Nm)
60 L/min.	**RSDC – 8WN**	T - 11A	34,9	22,2	30,2	40/50
120 L/min.	**RSFC – 8WN**	T - 2A	34,9	28,6	35,1	60/70
240 L/min.	**RSHC – 8WN**	T - 17A	46,0	31,8	46,0	200/215
480 L/min.	**RSJC – 8WN**	T - 19A	63,5	41,3	58,7	465/500

Performance Curves

RSDC-8 **RSFC-8** **RSHC-8** **RSJC-8**

Typical Pressure Rise

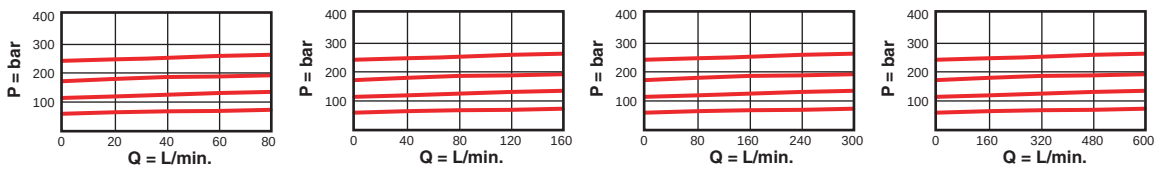

- Maximum operating pressure = 350 bar
- Will accept maximum pressure at Port 2.
- Pressure at port 3 is directly additive at a 1:1 ratio to the valve setting and should not exceed 350 bar
- Control pilot flow = RSDC-8: 0,11 to 0,16 L/min., RSFC-8: 0,16 to 0,25 L/min., RSHC-8, RSJC-8: 0,25 to 0,33 L/min.
- Maximum leakage = RSDC-8: 32,8 cc/min/ 70 bar: RSFC-8: 49,2 cc/min./70, RSHC-8: 65,5 cc/min./70 bar, RSJC-8: 81,9 cc/min./70 bar.
- With the -8 control option, the main stage valve should first be installed to the correct torque value. The T-8A pilot control valve should then be installed into the main stage valve to its required torque value.

OPTION ORDERING INFORMATION

Model Codes printed in Red are Preferred Versions and most readily available

RS ★ C – 8 ★ ★

Nominal Capacity		*Control*		*Minimum Control Pressure*		*Seal*	
D	60 L/min.	**8**	T-8A Cavity in hex body for pilot operation (Pilot valve to be ordered separately)	**D**	1,7 bar	**N**	Buna-N
F	120 L/min.			**W**	7 bar	**V**	Viton
H	240 L/min.						
J	480 L/min.						

Visit www.sunhydraulics.com for detailed and complete technical information on our full line of products.

AIR CONTROLLED, PILOT OPERATED, BALANCED PISTON

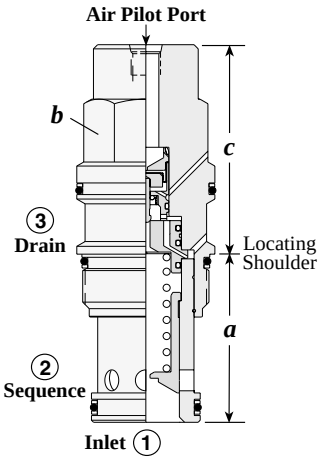

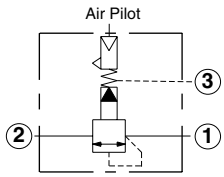

Capacity	*Typical Cartridge Model Code*	*Cavity*	*Cartridge Dimensions* *a*	*b*	*c* A	*c* B	*Installation Torque (Nm)*
120 L/min.	**RSFE – ABN**	T - 2A	34,9	28,6	51	-	60/70
240 L/min.	**RSHE – BBN**	T - 17A	46	31,8	-	63	200/215
480 L/min.	**RSJE – BBN**	T - 19A	63,5	41,3	-	80	465/500

Performance Curves

RSFE **RSHE** **RSJE**

Pressure Drop Sequenced Open

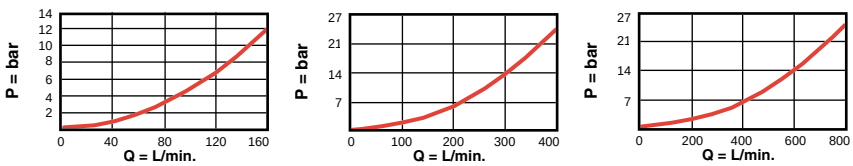

- Pilot ratio, air to hydraulic 1:20
- Maximum operating pressure = 140 bar
- Maximum air pressure should not exceed 10 bar.
- Typical response time 10 ms.
- Maximum leakage = RSFE: 49,2 cc/min./70 bar, RSHE: 65,5 cc/min./70 bar, RSJE: 81,9 cc/min./70 bar.

OPTION ORDERING INFORMATION

Model Codes printed in Red are Preferred Versions and most readily available

RS ✶ E – ✶ B ✶

Nominal Capacity

F 120 L/min.

H 240 L/min.

J 480 L/min.

Control

Available for RSFE only

A 1/4" NPTF Pilot Port at end of Cartridge*

Available for RSHE, RSJE only

B SAE-4 Pilot Port at end of Cartridge*

Adjustment Range

B 3,5 - 105 bar

Seal

N Buna-N

V Viton

Visit www.sunhydraulics.com for detailed and complete technical information on our full line of products.

DIRECT ACTING WITHOUT REVERSE FLOW CHECK

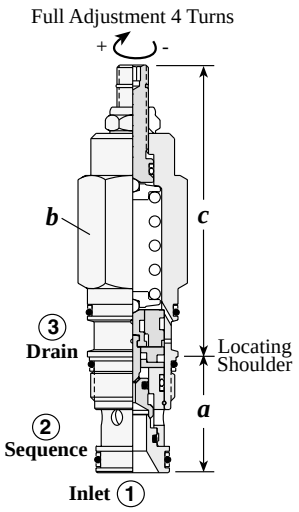

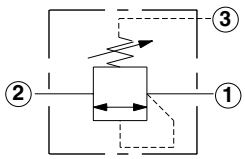

Capacity	Typical Cartridge Model Code	Cavity	Cartridge Dimensions a	b	c L	c C	Installation Torque (Nm)
60 L/min.	**SXCA – LAN**	T - 11A	34,9	22,2	79	81	40/50
120 L/min.	**SXEA – LAN**	T - 2A	34,9	28,6	89	91	60/70

Performance Curves

SXCA **SXEA**

Pressure Drop Sequenced Open

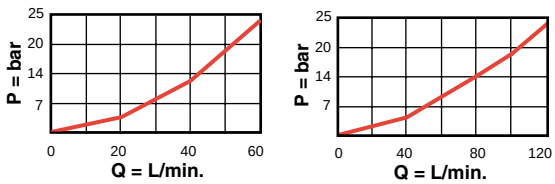

- Maximum operating pressure = 350 bar
- Maximum valve leakage at reseat = 0,7 cc/min
- Typical response time 2 ms
- Pressure at port 3 is directly additive to the valve setting at a 1:1 ratio and should not exceed 350 bar.
- Reseat exceeds 85% of cracking pressure.

OPTION ORDERING INFORMATION

Model Codes printed in Red are Preferred Versions and most readily available

SX ✶ A – ✶ ✶ ✶

Nominal Capacity	*Control***	*Adjustment Range*	*Seal*
C 60 L/min.	**L** Standard Screw	**A** 35 - 210 bar	**N** Buna-N
E 120 L/min.	**C** Tamper Resistant	**B** 20 - 105 bar	**V** Viton
		C 140 - 420 bar	
		D 14 - 55 bar	
		W 55 - 315 bar	

** *See page 162 for information on Control Options*

Adjustment Range Options:
A, B, and W are standard set at 70 bar.
C Option is standard set at 140 bar.
D Option is standard set at 25 bar.
Customer may specify pressure setting.

Visit www.sunhydraulics.com for detailed and complete technical information on our full line of products.

DIRECT ACTING WITH REVERSE FLOW CHECK

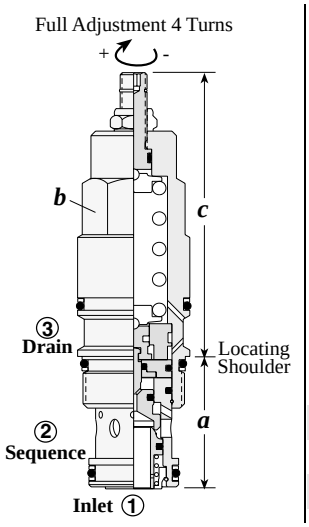

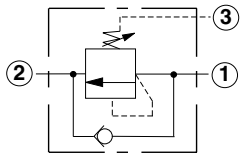

Capacity	*Typical Cartridge Model Code*	*Cavity*	*Cartridge Dimensions* *a*	*b*	*c* L	*c* C	*Installation Torque (Nm)*
60 L/min.	**SCCA – LAN**	T - 11A	34,9	22,2	79	81	40/50
120 L/min.	**SCEA – LAN**	T - 2A	34,9	28,6	89	91	60/70
240 L/min.	**SCGA – LAN**	T - 17A	46	31,8	100	102	200/215
480 L/min.	**SCIA – LAN**	T - 19A	63,5	41,3	122,9	128,5	465/500

Performance Curves

SCCA **SCEA** **SCGA** **SCIA**

Free Flow to Pressure Drop Sequenced Open

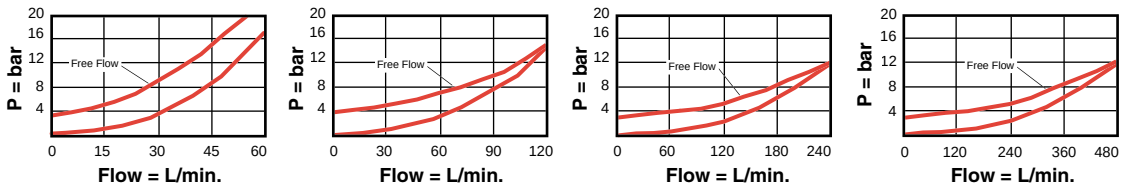

- Maximum operating pressure = 350 bar
- Maximum valve leakage at reseat = 0,7 cc/min
- Free flow check cracking pressure = 2,8 bar
- Typical response time 2 ms
- Pressure at port 3 is directly additive to the valve setting at a 1:1 ratio and should not exceed 350 bar.
- Reseat exceeds 85% of cracking pressure.

OPTION ORDERING INFORMATION **Model Codes printed in Red are Preferred Versions and most readily available**

SC ★ A – ★ ★ ★

Nominal Capacity	*Control***	*Adjustment Range*	*Seal*
C 60 L/min.	**L** Standard Screw	**A** 35 - 210 bar	**N** Buna-N
E 120 L/min.	**C** Tamper Resistant	**B** 20 - 105 bar	**V** Viton
G 240 L/min.		**C** 140 - 420 bar	
I 480 L/min.		**D** 14 - 55 bar	
		W 55 - 315 bar	

Adjustment Range Options:
A, B, and W are standard set at 70 bar.
C Option is standard set at 140 bar.
D Option is standard set at 25 bar.
Customer may specify pressure setting.

** *See page 162 for information on Control Options*

Visit www.sunhydraulics.com for detailed and complete technical information on our full line of products.

PILOT OPERATED, KICK-DOWN

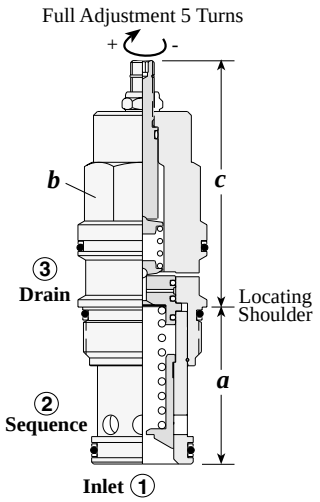

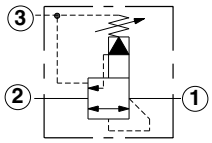

Capacity	Typical Cartridge Model Code	Cavity	Cartridge Dimensions a	b	c L	c C	c K	Installation Torque (Nm)
60 L/min.	**SQDB – LAN**	T - 11A	34,9	22,2	64	66	70	40/50
120 L/min.	**SQFB – LAN**	T - 2A	34,9	28,6	72	74	78	60/70
240 L/min.	**SQHB – LAN**	T - 17A	46	31,8	84	86	90	200/215
480 L/min.	**SQJB – LAN**	T - 19A	63,5	41,3	100	104	107	465/500

Performance Curves

SQDB **SQFB** **SQHB** **SQJB**

Pressure Drop Sequenced Open

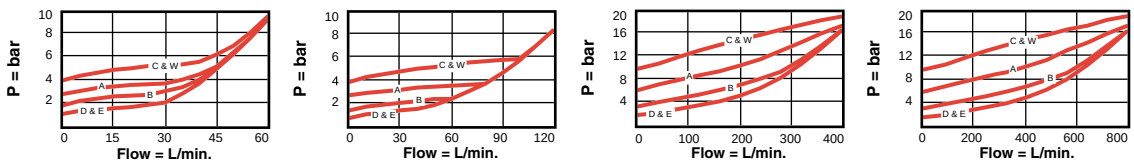

- Maximum operating pressure = 350 bar
- Maximum leakage = SQDB: 32,8 cc/min./70 bar, SQFB: 49,2 cc/min./70 bar , SQHB: 65,5 cc/min./70 bar, SQJB: 81,9 cc/min./70 bar
- Typical response time 25 ms
- Pressure at port 3 is directly additive to the valve setting at a 1:1 ratio and should not exceed 350 bar.
- To reset valve, flow through the cartridge must cease.

OPTION ORDERING INFORMATION

Model Codes printed in Red are Preferred Versions and most readily available

SQ ★ B – ★ ★ ★

Nominal Capacity

- **D** 60 L/min.
- **F** 120 L/min.
- **H** 240 L/min.
- **J** 480 L/min.

*Control***

- **L** Standard Screw
- **C** Tamper Resistant
- **K** Handknob

Adjustment Range

- **A** 7 - 210 bar
- **B** 3,5 - 105 bar
- **C** 10 - 420 bar
- **D** 2 - 55 bar
- **E** 2 - 25 bar
- **W** 10 - 315 bar

Seal

- **N** Buna-N
- **V** Viton

*** See page 162 for information on Control Options*

Adjustment Range Options:
A, B, C, and W are standard set at 70 bar.
D Option is standard set at 25 bar.
E Option is standard set at 14 bar.
Customer may specify pressure setting.

Visit www.sunhydraulics.com for detailed and complete technical information on our full line of products.

NOTES

Reducing and Reducing/Relieving Cartridge Valves

	Cartridge Type	*Page*
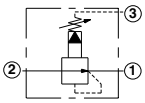	Pilot Operated Reducing	30
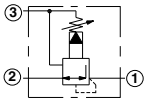	Pilot Operated Reducing/Relieving	31
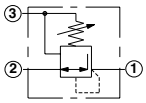	Direct Acting Reducing/Relieving	32
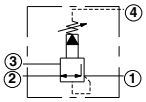	Pilot Operated Reducing/Relieving, Externally Drained	33
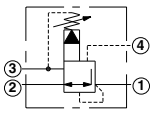	Pilot Operated Reducing/Relieving, Ventable	34
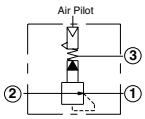	Air Controlled, Pilot Operated Reducing	35
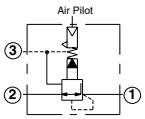	Air Controlled, Pilot Operated Reducing/Relieving	36
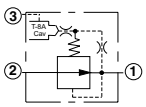	Modulating Element with Integral Pilot Control Cavity	37
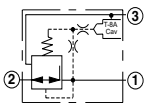	3-Way, Modulating Element with Integral Pilot Control Cavity	38
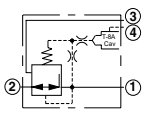	3-Way, Externally Drained, Modulating Element with Integral Pilot Control Cavity	39
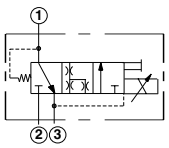	Electro-proportional, Direct Acting Reducing/Relieving	40
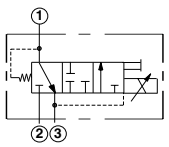	Electro-proportional, Direct Acting with Low Leakage	41

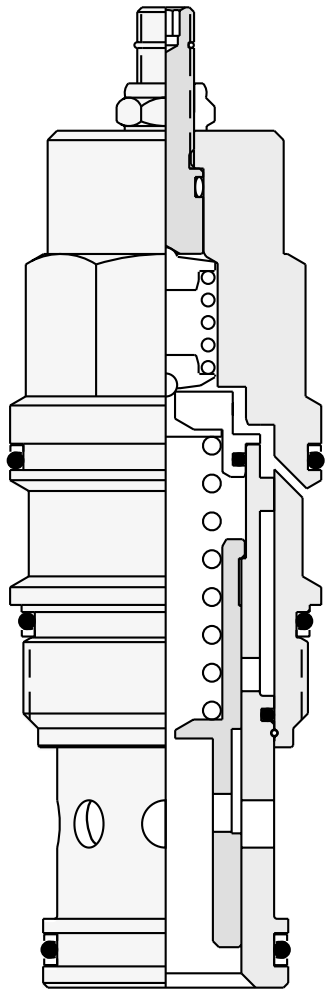

PILOT OPERATED REDUCING

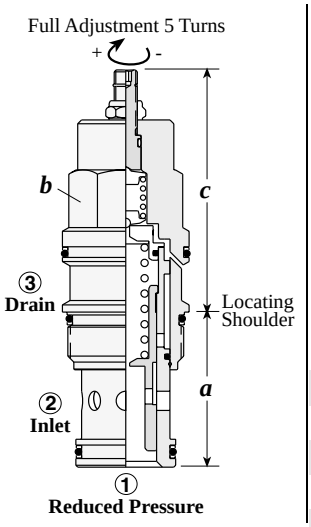

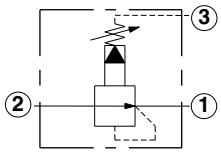

Capacity	*Typical Cartridge Model Code*	*Cavity*	*Cartridge Dimensions* *a*	*b*	*c* L	*c* C	*c* K	*Installation Torque (Nm)*
20 L/min.	**PBBB – LAN**	T - 163A	31	19,1	65	67	71	35/40
40 L/min.	**PBDB – LAN**	T - 11A	34,9	22,2	64	66	70	40/50
80 L/min.	**PBFB – LAN**	T - 2A	34,9	28,6	72	74	78	60/70
160 L/min.	**PBHB – LAN**	T - 17A	46	31,8	84	86	90	200/215
320 L/min.	**PBJB – LAN**	T - 19A	63,5	41,3	100	104	107	465/500

Performance Curves

PB*B **PBDB** **PBFB** **PBHB** **PBJB**

Regulated Pressure

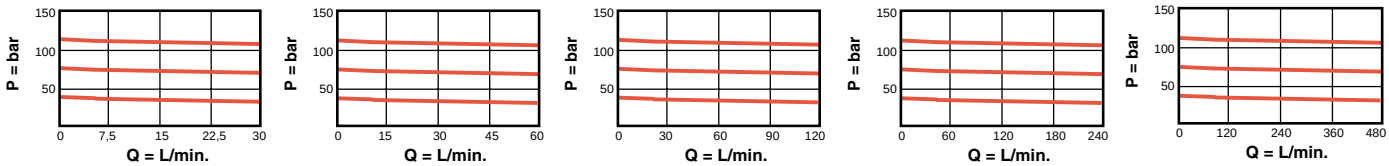

- Maximum operating pressure = 350 bar
- Factory pressure setting established at blocked control port (deadhead)
- Control pilot flow = PBBB, PBDB: 0,11 to 0,16 L/min., PBFB: 0,16 to 0,25 L/min., PBHB, PBJB: 0,25 to 0,33 L/min.
- Pressure at port 3 is directly additive to the valve setting at a 1:1 ratio and should not exceed 210 bar.

OPTION ORDERING INFORMATION **Model Codes printed in Red are Preferred Versions and most readily available**

PB ★ B – ★ ★ ★

Nominal Capacity		*Control***		*Adjustment Range*		*Seal*	
B	20 L/min.*	**L**	Standard Screw	**A**	7 - 210 bar	**N**	Buna-N
D	40 L/min.	**C**	Tamper Resistant	**B**	3,5 - 105 bar	**V**	Viton
F	80 L/min.	**K**	Handknob	**N**	4 - 55 bar		
H	160 L/min.			**Q**	4 - 25 bar		
J	320 L/min.			**W**	10 - 315 bar		

Adjustment Range Options:
All are standard set at 14 bar.
Maximum pressure differentials for spring ranges:
A and B are 210 bar.
N and Q are 140 bar.
W is 350 bar inlet pressure.

** *See page 162 for information on Control Options*

* *Minimum setting 5 bar on all ranges.*
Customer may specify pressure setting.

Visit www.sunhydraulics.com for detailed and complete technical information on our full line of products.

PILOT OPERATED REDUCING/RELIEVING

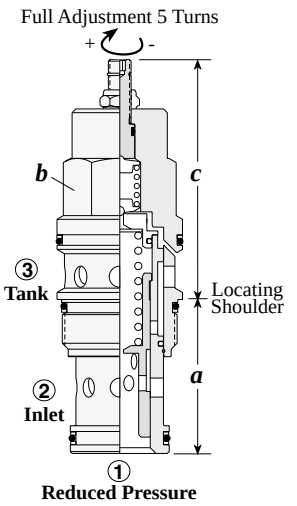

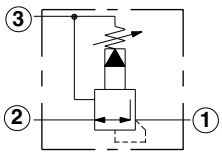

Capacity	*Typical Cartridge Model Code*	*Cavity*	*Cartridge Dimensions* *a*	*b*	*c* L	C	K	*Installation Torque (Nm)*
40 L/min.	**PPDB – LAN**	T - 11A	34,9	22,2	64	66	70	40/50
80 L/min.	**PPFB – LAN**	T - 2A	34,9	28,6	72	74	78	60/70
160 L/min.	**PPHB – LAN**	T - 17A	46	31,8	84	86	90	200/215
320 L/min.	**PPJB – LAN**	T - 19A	63,5	41,3	100	104	107	465/500

Performance Curves

PPDB **PPFB** **PPHB** **PPJB**

Regulated Pressure

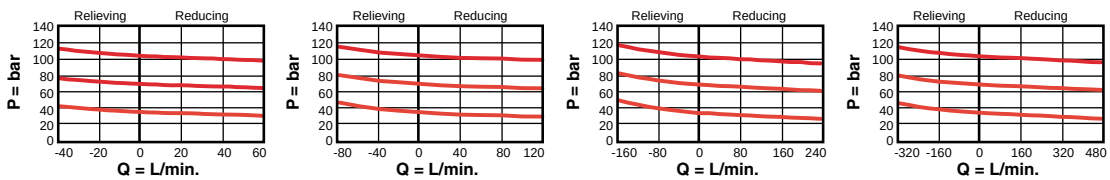

- Maximum operating pressure = 350 bar
- Factory pressure setting established at blocked control port (deadhead)
- Control pilot flow = PPDB: 0,11 to 0,16 L/min., PPFB: 0,16 to 0,25 L/min., PPHB, PPJB: 0,25 to 0,33 L/min.
- Pressure at port 3 is directly additive to the valve setting at a 1:1 ratio and should not exceed 210 bar.

OPTION ORDERING INFORMATION **Model Codes printed in Red are Preferred Versions and most readily available**

PP ★ B – ★ ★ ★

Nominal Capacity	*Control***	*Adjustment Range*	*Seal*
D 40 L/min.	**L** Standard Screw	**A** 7 - 210 bar	**N** Buna-N
F 80 L/min.	**C** Tamper Resistant	**B** 3,5 - 105 bar	**V** Viton
H 160 L/min.	**K** Handknob	**N** 4 - 55 bar	
J 320 L/min.		**Q** 4 - 25 bar	
		W 10 - 315 bar	

** *See page 162 for information on Control Options*

Adjustment Range Options:
All are standard set at 14 bar.
Maximum pressure differentials for spring ranges:
A and B are 210 bar.
N and Q are 140 bar.
W is 350 bar inlet pressure.
Customer may specify pressure setting.

Visit www.sunhydraulics.com for detailed and complete technical information on our full line of products.

DIRECT ACTING REDUCING/RELIEVING

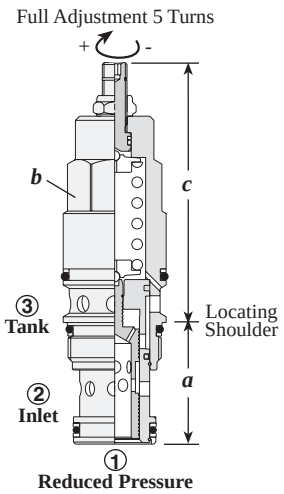

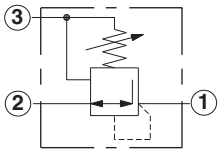

Capacity	*Typical Cartridge Model Code*	*Cavity*	*Cartridge Dimensions*					*Installation Torque (Nm)*
			a	*b*	*c*			
					L	C	K	
40 L/min.	**PRDB – LAN**	T - 11A	34,9	22,2	79	81	85	40/50
80 L/min.	**PRFB – LAN**	T - 2A	34,9	28,6	89	91	96	60/70
160 L/min.	**PRHB – LAN**	T - 17A	46	31,8	100	102	107	200/215
320 L/min.	**PRJB – LAN**	T - 19A	63,5	41,3	124	127,8	130	350/375

Performance Curves

PRDB **PRFB** **PRHB** **PRJB**

Regulated Pressure

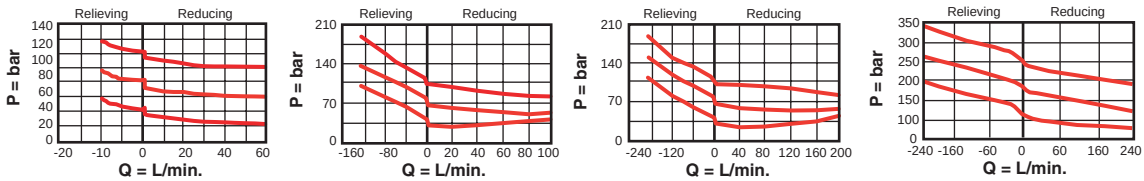

- Maximum operating pressure = 350 bar
- Factory pressure setting established at blocked control port (deadhead)
- Maximum leakage = PRDB: 32,8 cc/min/ 70 bar: PRFB: 49,2 cc/min./70, PRHB: 65,5 cc/min./70 bar, PRJB: 81,9 cc/min./70 bar.
- Pressure at port 3 is directly additive to the valve setting at a 1:1 ratio and should not exceed 210 bar.
- All spring ranges are capable of operating with 350 bar inlet pressure.

OPTION ORDERING INFORMATION **Model Codes printed in Red are Preferred Versions and most readily available**

PR ✶ B – ✶ ✶ ✶

Nominal Capacity

D 40 L/min.
F 80 L/min.
H 160 L/min.
J 320 L/min.

Control**

L Standard Screw
C Tamper Resistant
K Handknob

Adjustment Range

A 35 - 210 bar
B 3,5 - 105 bar
D 1,5 - 55 bar
E 1,5 - 25 bar
S 1,5 - 14 bar
W* 50 - 315 bar

Available for PRFB and PRHB

A 50-210 bar
B 20-105 bar
D 14-55 bar
E 7-25 bar
S 3,5-14 bar

Seal

N Buna-N
V Viton

Adjustment Range Options:
PRDB Only:
A is standard set at 70 bar.
B, D, E, S are standard set at 14 bar.
PRFB, PRHB:
A, W are standard set at 70 bar.
D is standard set at 25 bar.
E is standard set at 14 bar.
S is standard set at 7 bar.

** *See page 162 for information on Control Options*

* *Not available for PRFB, PRHB*
Customer may specify pressure setting.

Visit www.sunhydraulics.com for detailed and complete technical information on our full line of products.

PILOT OPERATED REDUCING/RELIEVING, EXTERNALLY DRAINED

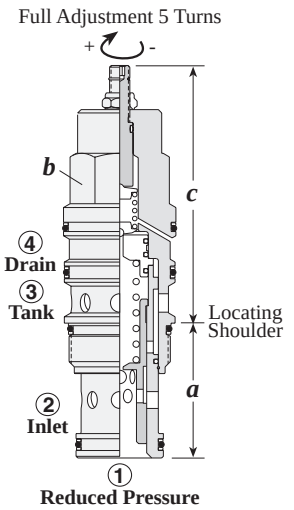

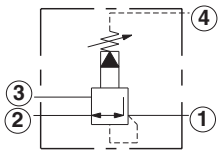

Capacity	*Typical Cartridge Model Code*	*Cavity*	*Cartridge Dimensions*					*Installation Torque (Nm)*
			a	*b*	*c*			
					L	C	K	
40 L/min.	**PVDA – LAN**	T - 21A	34,9	22,2	79	81	85	40/50
80 L/min.	**PVFA – LAN**	T - 22A	34,9	28,6	88	90	94	60/70
160 L/min.	**PVHA – LAN**	T - 23A	46	31,8	100	102	107	200/215
320 L/min.	**PVJA – LAN**	T - 24A	63,5	41,3	122	126	129	465/500

Performance Curves

PVDA **PVFA** **PVHA** **PVJA**

Regulated Pressure

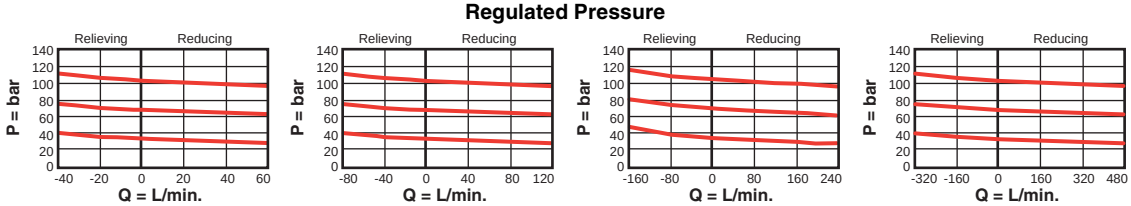

- Maximum operating pressure = 350 bar
- Factory pressure setting established at blocked control port (deadhead)
- Control pilot flow = PVDA: 0,11 to 0,16 L/min., PVFA: 0,16 to 0,25 L/min., PVHA, PVJA: 0,25 to 0,33 L/min.
- Maximum pressure at port 3 should be limited to 210 bar.
- Pressure on the drain (port 4) is directly additive to the valve setting at a 1:1 ratio and should not exceed 350 bar.

OPTION ORDERING INFORMATION

Model Codes printed in Red are Preferred Versions and most readily available

PV ✶ A – ✶ ✶ ✶

Nominal Capacity		*Control***		*Adjustment Range*		*Seal*	
D	40 L/min.	**L**	Standard Screw	**A**	7 - 210 bar	**N**	Buna-N
F	80 L/min.	**C**	Tamper Resistant	**B**	3,5 - 105 bar	**V**	Viton
H	160 L/min.	**K**	Handknob	**D**	2 - 55 bar		
J	320 L/min.			**E**	2 - 25 bar		
				W	10 - 315 bar		

***See page 162 for information on Control Options*

Adjustment Range Options:
All are standard set at 14 bar.
Maximum pressure differentials for spring ranges:
A and B are 210 bar.
D and E are 140 bar.
W is 350 bar inlet pressure.
Customer may specify pressure setting.

Visit www.sunhydraulics.com for detailed and complete technical information on our full line of products.

PILOT OPERATED REDUCING/RELIEVING, VENTABLE

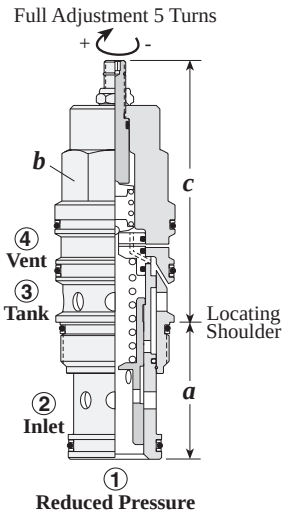

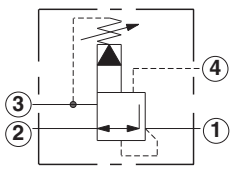

Capacity	Typical Cartridge Model Code	Cavity	Cartridge Dimensions a	b	c L	c C	c K	Installation Torque (Nm)
40 L/min.	**PVDB – LAN**	T - 21A	34,9	22,2	79	81	85	40/50
80 L/min.	**PVFB – LAN**	T - 22A	34,9	28,6	88	90	94	60/70
160 L/min.	**PVHB – LAN**	T - 23A	46	31,8	100	102	107	200/215
320 L/min.	**PVJB – LAN**	T - 24A	63,5	41,3	122	126	129	465/500

Performance Curves

PVDB **PVFB** **PVHB** **PVJB**

Regulated Pressure

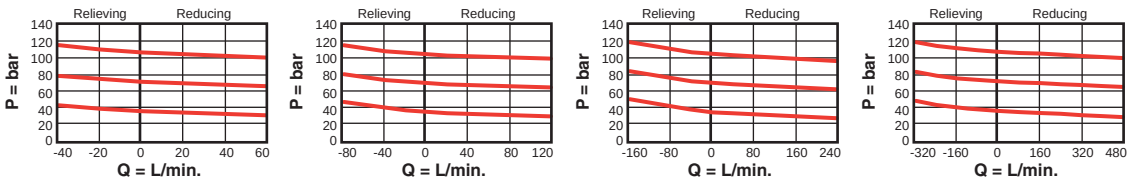

- Maximum operating pressure = 350 bar
- Factory pressure setting established at blocked control port (deadhead)
- Control pilot flow = PVDB: 0,11 to 0,16 L/min., PVFB: 0,16 to 0,25 L/min., PVHB, PVJB: 0,25 to 0,33 L/min.
- Pressure at port 3 is directly additive to the valve setting at a 1:1 ratio and should not exceed 210 bar.
- By controlling the pressure at the vent (port 4), the effective setting of the valve can be controlled below the nominal valve setting.

OPTION ORDERING INFORMATION

Model Codes printed in Red are Preferred Versions and most readily available

PV ★ B – ★ ★ ★

Nominal Capacity		*Control***		*Adjustment Range*		*Seal*	
D	40 L/min.	**L**	Standard Screw	**A**	7 - 210 bar	**N**	Buna-N
F	80 L/min.	**C**	Tamper Resistant	**B**	3,5 - 105 bar	**V**	Viton
H	160 L/min.	**K**	Handknob	**D**	2 - 55 bar		
J	320 L/min.			**E**	2 - 25 bar		
				W	10 - 315 bar		

** *See page 162 for information on Control Options*

Adjustment Range Options:
All are standard set at 14 bar.
Maximum pressure differentials for spring ranges:
A and B are 210 bar.
D and E are 140 bar.
W is 350 bar inlet pressure.
Customer may specify pressure setting.

Visit www.sunhydraulics.com for detailed and complete technical information on our full line of products.

AIR CONTROLLED, PILOT OPERATED REDUCING

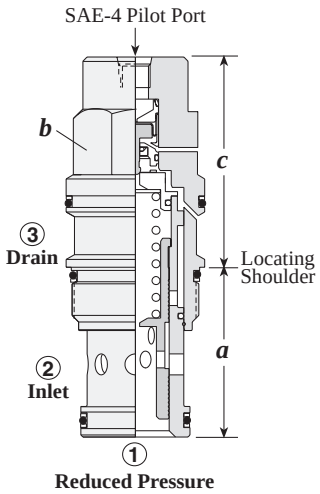

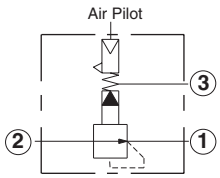

Capacity	*Typical Cartridge Model Code*	*Cavity*	*Cartridge Dimensions* *a*	*b*	*c* A	*c* B	*Installation Torque (Nm)*
80 L/min.	**PBFC – ABN**	T - 2A	34,9	28,6	51	-	60/70
160 L/min.	**PBHC – BBN**	T - 17A	46	31,8	-	63	200/215
320 L/min.	**PBJC – BBN**	T - 19A	63,5	41,3	-	80	465/500

Performance Curves

PBFC **PBHC** **PBJC**

Regulated Pressure

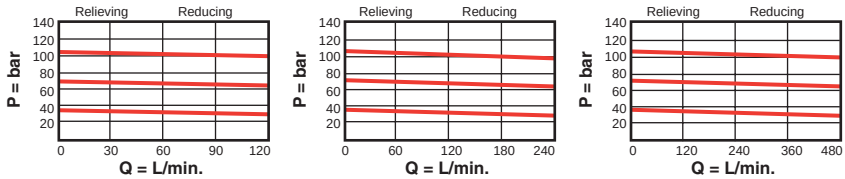

- Pilot ratio, air to hydraulic 1:20
- Maximum operating pressure = 140 bar
- Maximum air pressure should not exceed 10 bar.
- Control pilot flow = PBFC: 0,16 to 0,25 L/min., PBHC, PBJC: 0,25 to 0,33 L/min.
- Maximum pressure differential, inlet to outlet = 210 bar.
- The pressure at port 3 determines the minimum valve setting and should not exceed 70 bar.

OPTION ORDERING INFORMATION

Model Codes printed in Red are Preferred Versions and most readily available

PB ✶ C – ✶ ✶ ✶

Nominal Capacity

F 80 L/min.

H 160 L/min.

J 320 L/min.

Control

Available in PBFC only

A 1/4" NPTF Pilot Port at end of Cartridge

Available for PBHC, PBJC only

B SAE-4 Pilot Port at end of Cartridge

Adjustment Range

B 3,5 - 105 bar

Seal

N Buna-N

V Viton

Visit www.sunhydraulics.com for detailed and complete technical information on our full line of products.

AIR CONTROLLED, PILOT OPERATED REDUCING/RELIEVING

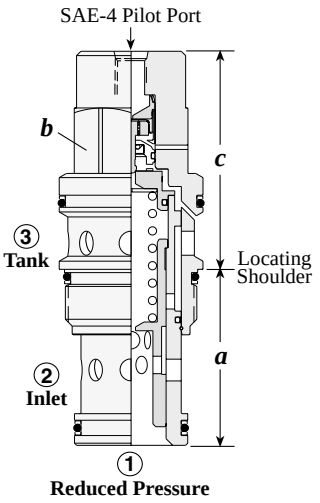

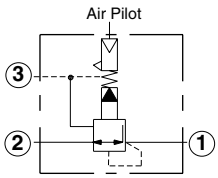

Capacity	*Typical Cartridge Model Code*	*Cavity*	*Cartridge Dimensions* *a*	*b*	*c* A	*c* B	*Installation Torque (Nm)*
80 L/min.	**PPFC – ABN**	T - 2A	34,9	28,6	51	-	60/70
160 L/min.	**PPHC – BBN**	T - 17A	46	31,8	-	63	200/215
320 L/min.	**PPJC – BBN**	T - 19A	63,5	41,3	-	80	465/500

Performance Curves

PPFC **PPHC** **PPJC**

Regulated Pressure

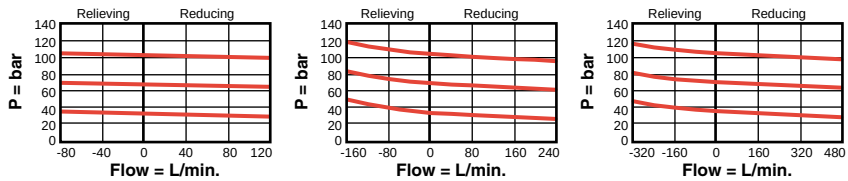

- Pilot ratio, air to hydraulic 1:20Maximum operating pressure = 140 bar
- Maximum air pressure should not exceed 10 bar.
- Control pilot flow = PPFC: 0,16 to 0,25 L/min., PPHC, PPJC: 0,25 to 0,33 L/min.
- Maximum pressure differential, inlet to outlet = 210 bar.
- The pressure at port 3 determines the minimum valve setting and should not exceed 70 bar.

OPTION ORDERING INFORMATION **Model Codes printed in Red are Preferred Versions and most readily available**

PP ✶ C – ✶ ✶ ✶

Nominal Capacity

F 80 L/min.

H 160 L/min.

J 320 L/min.

Control

Available in PPFC only

A 1/4" NPTF Pilot Port at end of Cartridge

Available for PPHC, PPJC only

B SAE-4 Pilot Port at end of Cartridge

Adjustment Range

B 3,5 - 105 bar

Seal

N Buna-N

V Viton

Visit www.sunhydraulics.com for detailed and complete technical information on our full line of products.

MODULATING ELEMENT WITH INTEGRAL PILOT CONTROL CAVITY

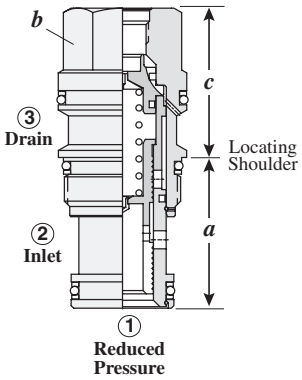

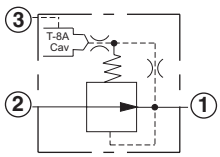

The -8 control option allows a pilot control valve to be incorporated directly into the end of the modulating element via the T-8A cavity. These pilot control cartridges are sold separately and include electro-proportional, solenoid, air pilot, and hydraulic pilot operation. See Pilot Control Cartridges on page 121.

Capacity	*Typical Cartridge Model Code*	*Cavity*	*Cartridge Dimensions*			*Installation Torque (Nm)*
			a	*b*	*c*	
40 L/min.	**PBDB – 8WN**	T - 11A	34,9	22,2	30,2	40/50
80 L/min.	**PBFB – 8WN**	T - 2A	34,9	28,6	35,1	60/70
160 L/min.	**PBHB – 8WN**	T - 17A	46,0	31,8	46,0	200/215
320 L/min.	**PBJB – 8WN**	T - 19A	63,5	41,3	58,7	465/500

Performance Curves

PBDB-8 **PBFB-8** **PBHB-8** **PBJB-8**

Regulated Pressure with T-8A Pilot Stage Installed

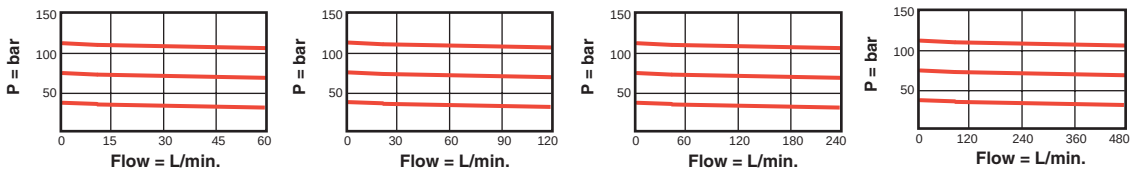

- Maximum operating pressure = 350 bar
- Control pilot flow = PBDB-8: 0,11 to 0,16 L/min., PBFB-8: 0,16 to 0,25 L/min., PBHB-8, PBJB-8: 0,25 to 0,33 L/min.
- Pressure at port 3 is directly additive to the valve setting at a 1:1 ratio and should not exceed 210 bar.
- Maximum inlet pressure is determined by the bias spring. The D spring is limited to 140 bar maximum differential pressure and the W spring is limited to 350 bar maximum inlet pressure.
- With the -8 control option, the main stage valve should first be installed to the correct torque value. The T-8A pilot control valve should then be installed into the main stage valve to its required torque value.

OPTION ORDERING INFORMATION

Model Codes printed in Red are Preferred Versions and most readily available

PB ✶ B – 8 ✶ ✶

Nominal Capacity	*Control*	*Minimum Control Pressure*	*Seal*
D 40 L/min.	**8** T-8A Cavity in hex body for pilot operation (Pilot valve to be ordered separately)	**D** 1,7 bar	**N** Buna-N
F 80 L/min.		**W** 7 bar	**V** Viton
H 160 L/min.			
J 320 L/min.			

Visit www.sunhydraulics.com for detailed and complete technical information on our full line of products.

3-WAY, MODULATING ELEMENT WITH INTEGRAL PILOT CONTROL CAVITY

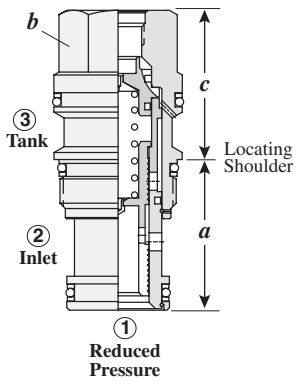

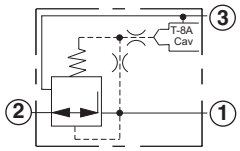

The -8 control option allows a pilot control valve to be incorporated directly into the end of the modulating element via the T-8A cavity. These pilot control cartridges are sold separately and include electro-proportional, solenoid, air pilot, and hydraulic pilot operation. See Pilot Control Cartridges on page 121.

Capacity	*Typical Cartridge Model Code*	*Cavity*	*Cartridge Dimensions*			*Installation Torque (Nm)*
			a	*b*	*c*	
40 L/min.	**PPDB – 8WN**	T - 11A	34,9	22,2	30,2	40/50
80 L/min.	**PPFB – 8WN**	T - 2A	34,9	28,6	35,1	60/70
160 L/min.	**PPHB – 8WN**	T - 17A	46,0	31,8	46,0	200/215
320 L/min.	**PPJB – 8WN**	T - 19A	63,5	41,3	58,7	465/500

Performance Curves

PPDB-8 **PPFB-8** **PPHB-8** **PPJB-8**

Regulated Pressure with T-8A Pilot Stage Installed

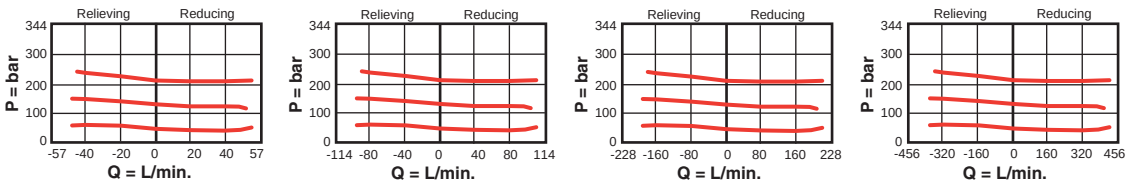

- .Maximum operating pressure = 350 bar
- Control pilot flow = PPDB-8: 0,11 to 0,16 L/min., PPFB-8: 0,16 to 0,25 L/min., PPHB-8, PPJB-8: 0,25 to 0,33 L/min.
- Pressure at port 3 is directly additive to the valve setting at a 1:1 ratio and should not exceed 210 bar.
- Maximum inlet pressure is determined by the bias spring. The D spring is limited to140 bar maximum differential pressure and the W spring is limited to 350 bar maximum inlet pressure.
- With the -8 control option, the main stage valve should first be installed to the correct torque value. The T-8A pilot control valve should then be installed into the main stage valve to its required torque value.

OPTION ORDERING INFORMATION **Model Codes printed in Red are Preferred Versions and most readily available**

PP ★ B – 8 ★ ★

Nominal Capacity	*Control*	*MinimumControl Pressure*	*Seal*
D 40 L/min.	**8** T-8A Cavity in hex body for pilot operation (Pilot valve to be ordered separately)	**D** 1,7 bar	**N** Buna-N
F 80 L/min.		**W** 7 bar	**V** Viton
H 160 L/min.			
J 320 L/min.			

Visit www.sunhydraulics.com for detailed and complete technical information on our full line of products.

3-WAY, EXTERNALLY DRAINED, MODULATING ELEMENT WITH INTEGRAL PILOT CONTROL CAVITY

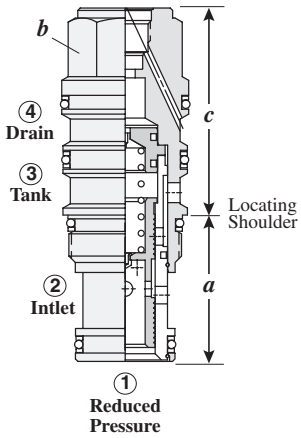

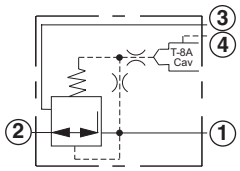

The -8 control option allows a pilot control valve to be incorporated directly into the end of the modulating element via the T-8A cavity. These pilot control cartridges are sold separately and include electro-proportional, solenoid, air pilot, and hydraulic pilot operation. See Pilot Control Cartridges on page 121.

Capacity	*Typical Cartridge Model Code*	*Cavity*	*Cartridge Dimensions*			*Installation Torque (Nm)*
			a	*b*	*c*	
40 L/min.	**PVDA – 8WN**	T - 21A	34,9	22,2	45,2	40/50
80 L/min.	**PVFA – 8WN**	T - 22A	34,9	28,6	50,8	60/70
160 L/min.	**PVHA – 8WN**	T - 23A	46,0	31,8	65,8	200/215
320 L/min.	**PVJA – 8WN**	T - 24A	63,5	41,3	80,3	465/500

Performance Curves

PVDA-8 **PVFA-8** **PVHA-8** **PVJA-8**

Regulated Pressure with T-8A Pilot Stage Installed

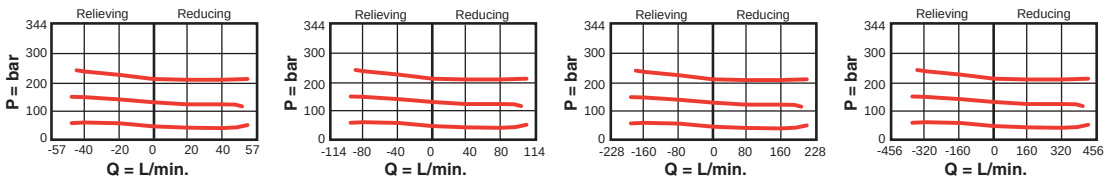

- Maximum operating pressure = 350 bar
- Control pilot flow = PVDA-8: 0,11 to 0,16 L/min., PVFA-8: 0,16 to 0,25 L/min., PVHA-8, PVJA-8: 0,25 to 0,33 L/min.
- Maximum pressure at port 3 should be limited to 210 bar.
- Pressure on the drain (port 4) is directly additive to the valve setting at a 1:1 ratio and should not exceed 350 bar.
- Maximum inlet pressure is determined by the bias spring. The D spring is limited to 140 bar maximum differential pressure and the W spring is limited to 350 bar maximum inlet pressure.
- With the -8 control option, the main stage valve should first be installed to the correct torque value. The T-8A pilot control valve should then be installed into the main stage valve to its required torque value.

OPTION ORDERING INFORMATION

Model Codes printed in Red are Preferred Versions and most readily available

PV ★ A – 8 ★ ★

Nominal Capacity	*Control*	*Minimum Control Pressure*	*Seal*
D 40 L/min.	**8** T-8A Cavity in hex body for pilot operation (Pilot valve to be ordered separately)	**D** 1,7 bar	**N** Buna-N
F 80 L/min.		**W** 7 bar	**V** Viton
H 160 L/min.			
J 320 L/min.			

Visit www.sunhydraulics.com for detailed and complete technical information on our full line of products.

ELECTRO-PROPORTIONAL, DIRECT ACTING REDUCING/RELIEVING

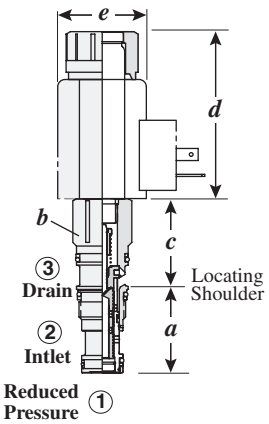

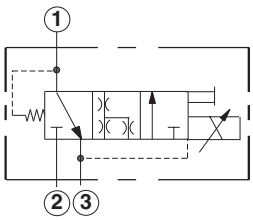

Capacity	*Typical Cartridge Model Code*	*Cavity*	*Cartridge Dimensions* *a*	*b*	*c*	*d*	*e (dia.)*	*Installation Torque (Nm)*
20 L/min.	**PRDL - MDN**	T-11A	35,1	22,2	38,1	70,1	37,3	45/50

Performance Curves

PRDL

Regulated Pressure

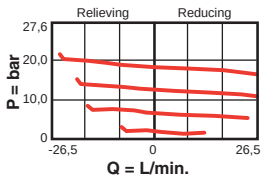

Command vs. Secondary Pressure

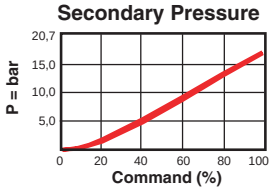

- Maximum operating pressure = 350 bar
- Maximum valve leakage = 328 cc/min. at deadhead
- Pressure at port 3 is directly additive to the valve setting at a 1:1 ratio and should not exceed 210 bar.
- For optimum performance, an amplifier with current sensing and adjustable dither should be used. Dither should be adjustable between 100 - 250 Hz.

OPTION ORDERING INFORMATION **Model Codes printed in Red are Preferred Versions and most readily available**

PR D L – M D N

Nominal Capacity	*Control*	*Operating Range*	*Seal*
L 20 L/min.	**M** Manual Override (Standard)	**D** 3,5 - 35 bar	**N** Buna-N
		E 1,7 - 18 bar	**V** Viton
		S 0,7 - 7 bar	

NOTE: Coil must be ordered separately. Use 12V DC or 24V DC (Series 770-*) coils only. See page 167.**

Visit www.sunhydraulics.com for detailed and complete technical information on our full line of products.

ELECTRO-PROPORTIONAL, DIRECT ACTING WITH LOW LEAKAGE

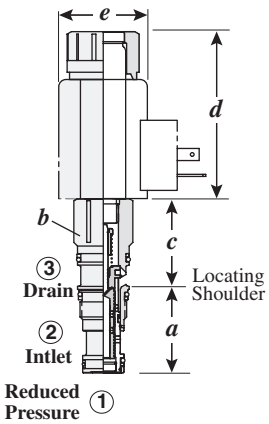

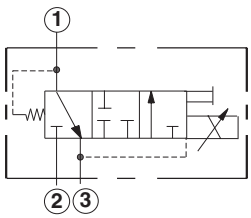

Capacity	Typical Cartridge Model Code	Cavity	Cartridge Dimensions a	b	c	d	e (dia.)	Installation Torque (Nm)
20 L/min.	**PRDP - MDN**	T-11A	35,1	22,2	38,1	70,1	37,3	45/50

Performance Curves

PRDP

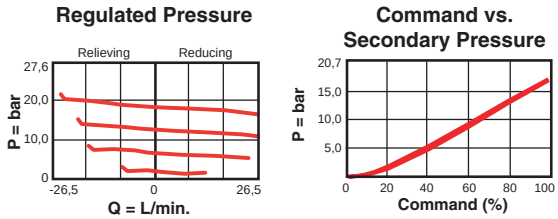

- Maximum operating pressure = 350 bar
- Maximum valve leakage = 32.8 cc/min. at deadhead
- Pressure at port 3 is directly additive to the valve setting at a 1:1 ratio and should not exceed 210 bar.
- For optimum performance, an amplifier with current sensing and adjustable dither should be used. Dither should be adjustable between 100 - 250 Hz.

OPTION ORDERING INFORMATION

Model Codes printed in Red are Preferred Versions and most readily available

PR D P – M D N

Nominal Capacity	*Control*	*Operating Range*	*Seal*
P 20 L/min.	**M** Manual Override (Standard)	**D** 3,5 - 35 bar	**N** Buna-N
		E 1,7 - 18 bar	**V** Viton

NOTE: Coil must be ordered separately. Use 12V DC or 24V DC (Series 770-*) coils only. See page 167.**

Visit www.sunhydraulics.com for detailed and complete technical information on our full line of products.

NOTES

Pilot Operated Check Cartridge Valves

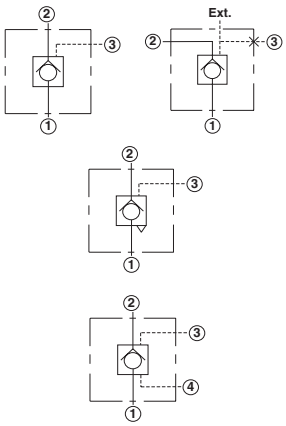

Cartridge Type	*Page*
Pilot Operated	44
Atmospherically Referenced, 3 Port Cavity	45
Vented, 4 Port Cavity	46

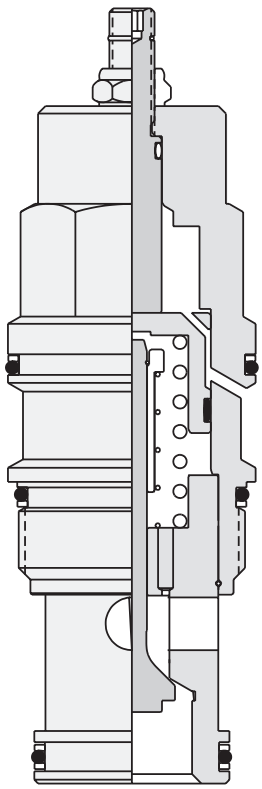

PILOT OPERATED

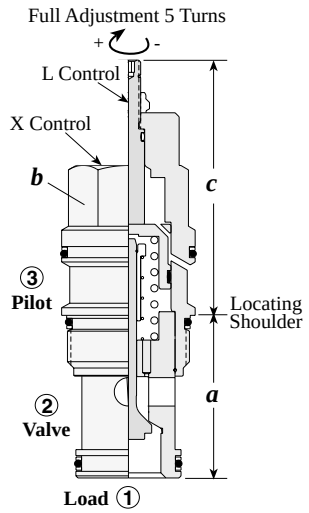

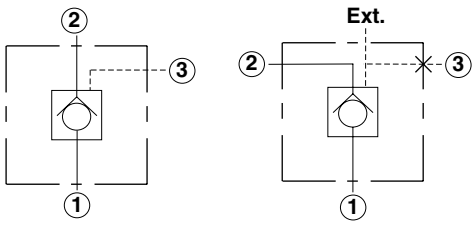

Capacity	*Typical Cartridge Model Code*	*Cavity*	*Cartridge Dimensions* *a*	*b*	*c* X,B,E,P	*c* L	*Installation Torque (Nm)*
30 L/min.	**CKBB – XCN**	T - 163A	31	19,1	32	43	35/40
60 L/min.	**CKCB – XCN**	T - 11A	34,9	22,2	31	62	40/50
120 L/min.	**CKEB – XCN**	T - 2A	34,9	28,6	35	72	60/70
240 L/min.	**CKGB – XCN**	T - 17A	46	31,8	46	84	200/215
480 L/min.	**CKIB – XCN**	T - 19A	63,5	41,3	59	100	465/500

Performance Curves

CKB* **CKC*** **CKE*** **CKG*** **CKI***

Typical Pressure Drop

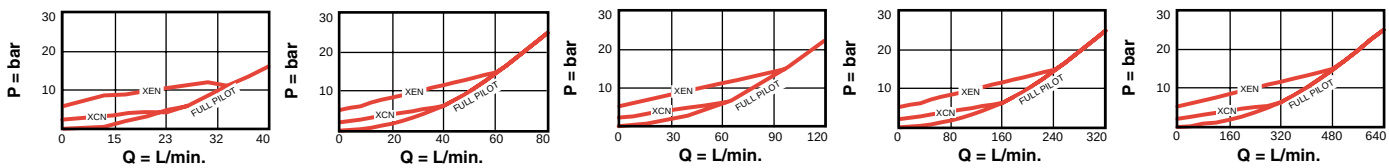

- Maximum operating pressure = 350 bar
- Maximum valve leakage = 0,07 cc/min.
- CKBB, CKBD available only with 2 bar or 5 bar check valve cracking pressures.
- CK*D has sealed pilot for use in circuits where cross port leakage is undesirable.
- CK*B has unsealed pilot to allow air trapped in the pilot line to be purged from the circuit.

OPTION ORDERING INFORMATION

Model Codes printed in Red are Preferred Versions and most readily available

CK ✶ ✶ – ✶ ✶ ✶

Nominal Capacity

- **B*** 30 L/min.
- **C** 60 L/min.
- **E** 120 L/min.
- **G** 240 L/min.
- **I** 480 L/min.

Version

- **B** Bleed through Pilot
- **D** Sealed Pilot Piston

Control**

- **X** Standard Pilot
- **L** Manual Load Release
- **B** 1/4" BSPP External Pilot Port 3 blocked
- **E** SAE-4 External Pilot Port 3 blocked
- **P** 1/4" NPTF External Pilot Port 3 blocked

Cracking Pressure

- **A** 0,3 bar
- **B** 1,0 bar
- **C** 2,0 bar
- **D** 3,5 bar
- **E** 5,0 bar
- **F** 7,0 bar

Seal

- **N** Buna-N
- **V** Viton

** *See page 162 for information on Control Options*

* *CKBB, CKBD available with C and E Cracking Pressures Only.*

Visit www.sunhydraulics.com for detailed and complete technical information on our full line of products.

ATMOSPHERICALLY REFERENCED, 3 PORT CAVITY

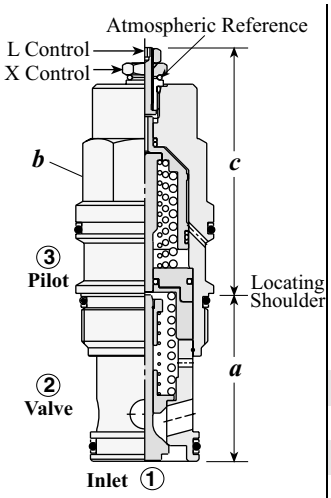

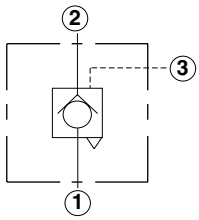

Capacity	*Typical Cartridge Model Code*	*Cavity*	*Cartridge Dimensions*					*Installation Torque (Nm)*
			a	*b*	*c*			
					X	L	S	
60 L/min.	**CKCV – XCN**	T - 11A	34,9	22,2	51	57	43	40/50
120 L/min.	**CKEV – XCN**	T - 2A	34,9	28,6	59	65	51	60/70
240 L/min.	**CKGV – XCN**	T - 17A	46	31,8	71	77	63	200/215
480 L/min.	**CKIV – XCN**	T - 19A	63,5	41,3	84	96	84	465/500

Performance Curves

CKCV **CKEV** **CKGV** **CKIV**

Typical Pressure Drop

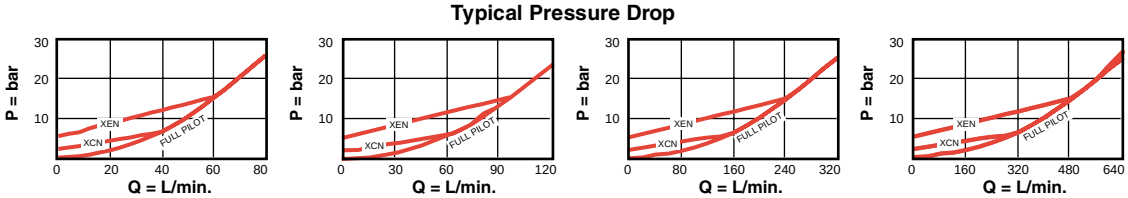

- Maximum operating pressure = 350 bar
- Maximum valve leakage = 0,07 cc/min.
- Approximately 0,07 cc of fluid will pass from the pilot area to the vented spring chamber every 4000 cycles.

OPTION ORDERING INFORMATION

Model Codes printed in Red are Preferred Versions and most readily available

CK ✶ V – ✶ ✶ ✶

Nominal Capacity

- **C** 60 L/min.
- **E** 120 L/min.
- **G** 240 L/min.
- **I** 480 L/min.

Control**

- **X** Standard Pilot
- **S** External SAE-4 Vent Port
- **L** Manual Load Release External Vent

Cracking Pressure

- **A** 0,3 bar
- **B** 1,0 bar
- **C** 2,0 bar
- **D** 3,5 bar
- **E** 5,0 bar
- **F** 7,0 bar

Seal

- **N** Buna-N
- **V** Viton

*** See page 162 for information on Control Options*

Visit www.sunhydraulics.com for detailed and complete technical information on our full line of products.

VENTED, 4 PORT CAVITY

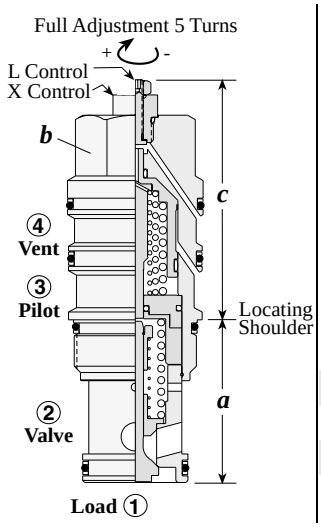

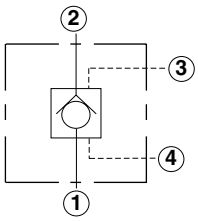

Capacity	*Typical Cartridge Model Code*	*Cavity*	*Cartridge Dimensions* *a*	*b*	*c* X	*c* L	*Installation Torque (Nm)*
60 L/min.	**CVCV – XCN**	T - 21A	34,9	22,2	54	60	40/50
120 L/min.	**CVEV – XCN**	T - 22A	34,9	28,6	60	65	60/70
240 L/min.	**CVGV – XCN**	T - 23A	46	31,8	72	77	200/215
480 L/min.	**CVIV – XCN**	T - 24A	63,5	41,3	89	96	465/500

Performance Curves

CVCV **CVEV** **CVGV** **CVIV**

Typical Pressure Drop

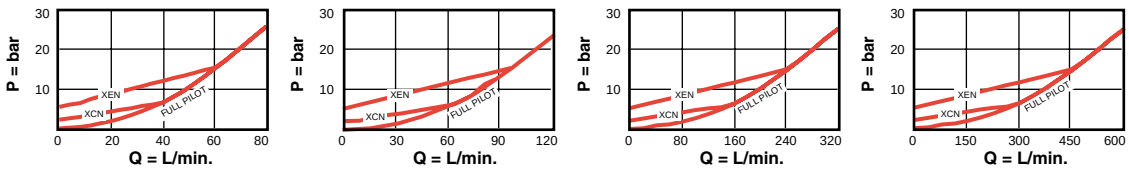

- Maximum operating pressure = 350 bar
- Maximum valve leakage = 0,07 cc/min.
- Port 4 (vent) should never be blocked as seal weepage will eventually cause valve to malfunction.
- Will accept pressure at port 4 (vent) but cannot exceed 350 bar.

OPTION ORDERING INFORMATION **Model Codes printed in Red are Preferred Versions and most readily available**

CV ★ V – ★ ★ ★

Nominal Capacity	*Control***	*Adjustment Range*	*Seal*
C 60 L/min.	**X** Standard Pilot	**A** 0,3 bar	**N** Buna-N
E 120 L/min.	**L** Manual Load Release	**B** 1,0 bar	**V** Viton
G 240 L/min.		**C** 2,0 bar	
I 480 L/min.		**D** 3,5 bar	
		E 5,0 bar	
		F 7,0 bar	

** *See page 162 for information on Control Options*

Visit www.sunhydraulics.com for detailed and complete technical information on our full line of products.

Counterbalance Cartridge Valves

	Cartridge Type	*Page*
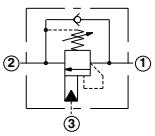	Standard, 280 Bar Maximum Setting	48
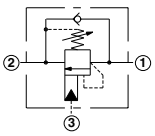	Standard, 350 Bar Maximum Setting	49
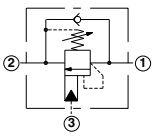	Semi-Restrictive, 280 Bar Maximum Setting	50
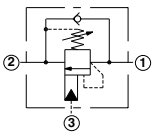	Semi-Restrictive, 350 Bar Maximum Setting	51
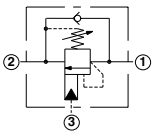	Restrictive, 280 Bar Maximum Setting	52
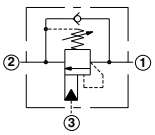	Restrictive, 350 Bar Maximum Setting	53
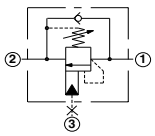	Without Pilot Assist, 3 Port Cavity	54
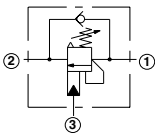	Atmospherically Referenced, 3 Port Cavity	55
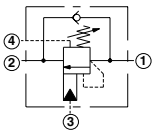	Vented, 280 Bar Maximum Setting	56
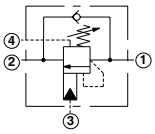	Vented, 420 Bar Maximum Setting	57

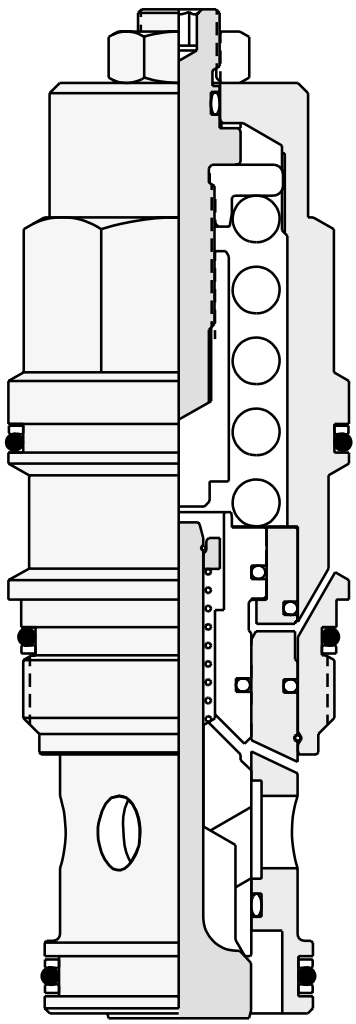

STANDARD, 280 BAR MAXIMUM SETTING

Turn screw clockwise to reduce setting and release load.
Complete Adjustment 3 3/4 Turns

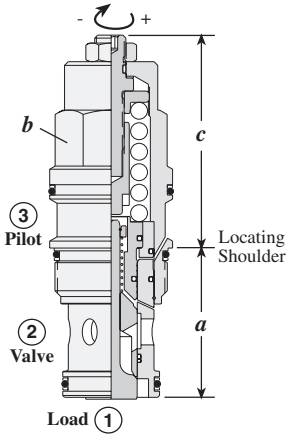

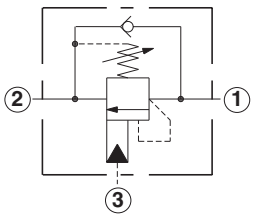

Capacity	Typical Cartridge Model Code	Cavity	Cartridge Dimensions a	b	c L	c C	Installation Torque (Nm)
60 L/min.	**CBCA – LHN**	T - 11A	34,9	22,2	50	56	40/50
120 L/min.	**CBEA – LHN**	T - 2A	34,9	28,6	61	64	60/70
240 L/min.	**CBGA – LHN**	T - 17A	46	31,8	70	84	200/215
480 L/min.	**CBIA – LHN**	T - 19A	63,5	41,3	90	104	465/500

Performance Curves

CBC* **CBE*** **CBG*** **CBI***

Free Flow and Pilot Open Pressure Drop

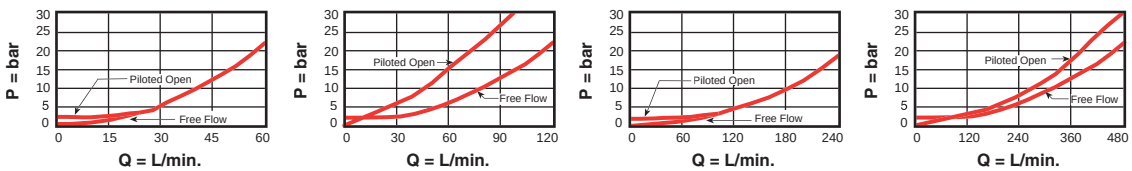

- Load holding to 215 bar with 280 bar valve setting
- Maximum valve leakage at reseat = 0,4 cc/min.
- Reseat exceeds 85% of set pressure
- Factory pressure setting established at 32,8 cc/min.
- Counterbalance valves should be set at least 1.3 times the maximum load induced pressure.
- Back pressure at port 2 adds to the effective relief setting at a ratio of 1 plus the pilot ratio times the back pressure.

OPTION ORDERING INFORMATION

Model Codes printed in Red are Preferred Versions and most readily available

CB ✶ ✶ – ✶ ✶ ✶

Nominal Capacity

C 60 L/min.
E 120 L/min.
G 240 L/min.
I 480 L/min.

Version

A 3:1 Pilot Ratio
B 1.5:1 Pilot Ratio (with sealed pilot)
Y 2:1 Pilot Ratio (with Bleed through Pilot)

Control**

L Standard Screw
C Tamper Resistant

*** See page 162 for information on Control Options*

Cracking Pressure

1,7 Bar Check Spring

H 70 - 280 bar
I 25 - 105 bar

0,3 Bar Check Spring

A 70 - 280 bar
B 25 - 105 bar

Adjustment Range Options:
A and H are standard set at 210 bar.
I and B are standard set at 70 bar.
Customer may specify setting.

Seal

N Buna-N
V Viton

Visit www.sunhydraulics.com for detailed and complete technical information on our full line of products.

STANDARD, 350 BAR MAXIMUM SETTING

Turn screw clockwise to reduce setting and release load.
Complete Adjustment 3 3/4 Turns

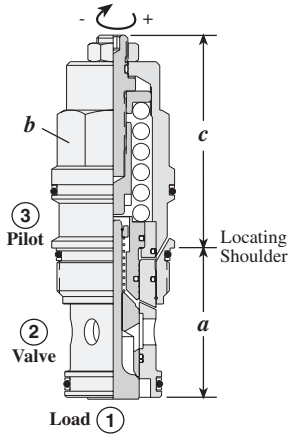

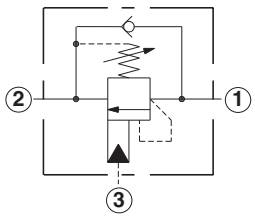

Capacity	Typical Cartridge Model Code	Cavity	Cartridge Dimensions a	b	c L	c C	Installation Torque (Nm)
60 L/min.	**CBCG – LJN**	T - 11A	34,9	22,2	50	56	40/50
120 L/min.	**CBEG – LJN**	T - 2A	34,9	28,6	61	64	60/70
240 L/min.	**CBGG – LJN**	T - 17A	46	31,8	70	84	200/215
480 L/min.	**CBIG – LJN**	T - 19A	63,5	41,3	90	104	465/500

Performance Curves

CBC* **CBE*** **CBG*** **CBI***

Free Flow and Pilot Open Pressure Drop

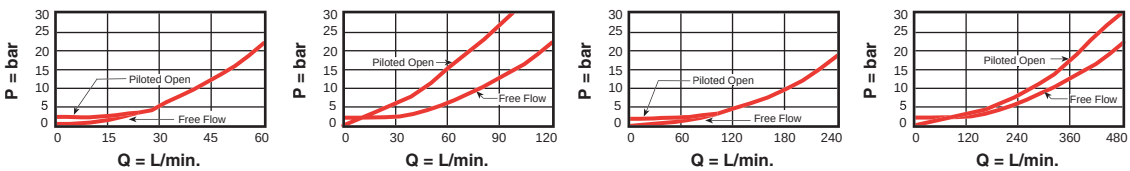

- Load holding to 270 bar with 350 bar valve setting
- Maximum valve leakage at reseat = 0,4 cc/min.
- Reseat exceeds 85% of set pressure
- Factory pressure setting established at 32,8 cc/min.
- Counterbalance valves should be set at least 1.3 times the maximum load induced pressure.
- Back pressure at port 2 adds to the effective relief setting at a ratio of 1 plus the pilot ratio times the back pressure.

OPTION ORDERING INFORMATION

Model Codes printed in Red are Preferred Versions and most readily available

CB ✶ ✶ – ✶ ✶ ✶

Nominal Capacity

- **C** 60 L/min.
- **E** 120 L/min.
- **G** 240 L/min.
- **I** 480 L/min.

Version

- **G** 4.5:1 Pilot Ratio
- **H** 10:1 Pilot Ratio
- **L** 2.3:1 Pilot Ratio (with sealed pilot)

Control**

- **L** Standard Screw
- **C** Tamper Resistant

Cracking Pressure

1,7 Bar Check Spring

- **J** 140 - 350 bar
- **K** 70 - 175 bar

0,3 Bar Check Spring

- **C** 140 - 350 bar
- **D** 70 - 175 bar

Seal

- **N** Buna-N
- **V** Viton

*** See page 162 for information on Control Options*

Adjustment Range Options:
J and C are standard set at 210 bar.
K and D are standard set at 140 bar.
Customer may specify setting.

Visit www.sunhydraulics.com for detailed and complete technical information on our full line of products.

SEMI-RESTRICTIVE, 280 BAR MAXIMUM SETTING

Turn screw clockwise to reduce setting and release load.
Complete Adjustment 3 3/4 Turns

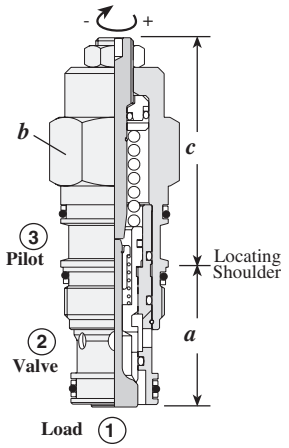

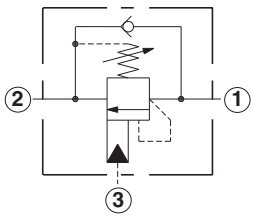

Capacity	Typical Cartridge Model Code	Cavity	Cartridge Dimensions a	b	c L	c C	Installation Torque (Nm)
40 L/min.	**CBBC – LHN**	T - 11A	34,9	22,2	50	56	40/50
80 L/min.	**CBDC – LHN**	T - 2A	34,9	28,6	61	64	60/70
160 L/min.	**CBFC – LHN**	T - 17A	46	31,8	70	84	200/215

Performance Curves

CBB* **CBD*** **CBF***

Free Flow and Pilot Open Pressure Drop

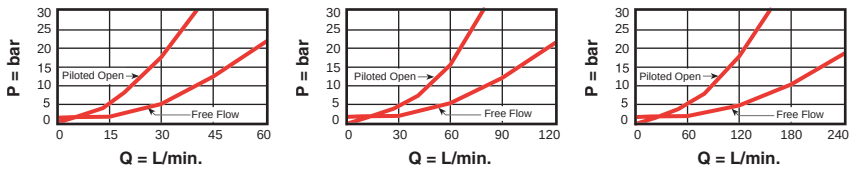

- Load holding to 215 bar with 280 bar valve setting
- Maximum valve leakage at reseat = 0,4 cc/min.
- Reseat exceeds 85% of set pressure
- Factory pressure setting established at 32,8 cc/min.
- Counterbalance valves should be set at least 1.3 times the maximum load induced pressure.
- Back pressure at port 2 adds to the effective relief setting at a ratio of 1 plus the pilot ratio times the back pressure.

OPTION ORDERING INFORMATION

Model Codes printed in Red are Preferred Versions and most readily available

CB ★ ★ – ★ ★ ★

Nominal Capacity

B 40 L/min.
D 80 L/min.
F 160 L/min.

Version

B 1.5:1 Pilot Ratio (with sealed pilot)
C 3:1 Pilot Ratio (with sealed pilot)

Control**

L Standard Screw
C Tamper Resistant

*** See page 162 for information on Control Options*

Cracking Pressure

1,7 Bar Check Spring

H 70 - 280 bar
I 25 - 105 bar

0,3 Bar Check Spring

A 70 - 280 bar
B 25 - 105 bar

Adjustment Range Options:
A and H are standard set at 210 bar.
I and B are standard set at 70 bar.
Customer may specify setting.

Seal

N Buna-N
V Viton

Visit www.sunhydraulics.com for detailed and complete technical information on our full line of products.

SEMI-RESTRICTIVE, 350 BAR MAXIMUM SETTING

Turn screw clockwise to reduce setting and release load.
Complete Adjustment 3 3/4 Turns

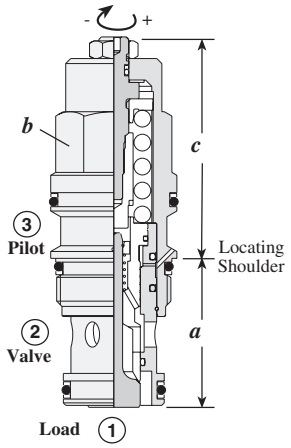

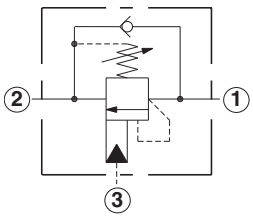

Capacity	Typical Cartridge Model Code	Cavity	Cartridge Dimensions a	b	c L	c C	Installation Torque (Nm)
40 L/min.	**CBBD – LJN**	T - 11A	34,9	22,2	50	56	40/50
80 L/min.	**CBDD – LJN**	T - 2A	34,9	28,6	61	64	60/70
160 L/min.	**CBFD – LJN**	T - 17A	46	31,8	70	84	200/215

Performance Curves

CBB* **CBD*** **CBF***

Free Flow and Pilot Open Pressure Drop

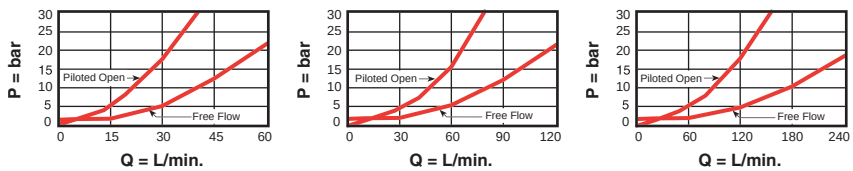

- Load holding to 270 bar with 350 bar valve setting
- Maximum valve leakage at reseat = 0,4 cc/min.
- Reseat exceeds 85% of set pressure
- Factory pressure setting established at 32,8 cc/min.
- Counterbalance valves should be set at least 1.3 times the maximum load induced pressure.
- Back pressure at port 2 adds to the effective relief setting at a ratio of 1 plus the pilot ratio times the back pressure.

OPTION ORDERING INFORMATION

Model Codes printed in Red are Preferred Versions and most readily available

CB ✶ ✶ – ✶ ✶ ✶

Nominal Capacity

B 40 L/min.
D 80 L/min.
F 160 L/min.

Version

D 4.5:1 Pilot Ratio (with sealed pilot)
L 2.3:1 Pilot Ratio (with sealed pilot)

Control**

L Standard Screw
C Tamper Resistant

Cracking Pressure

1,7 Bar Check Spring

J 140 - 350 bar
K 70 - 175 bar

0,3 Bar Check Spring

C 140 - 350 bar
D 70 - 175 bar

Adjustment Range Options:
J and C are standard set at 210 bar.
K and D are standard set at 140 bar.
Customer may specify setting.

Seal

N Buna-N
V Viton

** *See page 162 for information on Control Options*

Visit www.sunhydraulics.com for detailed and complete technical information on our full line of products.

RESTRICTIVE, 280 BAR MAXIMUM SETTING

Turn screw clockwise to reduce setting and release load.
Complete Adjustment 3 3/4 Turns

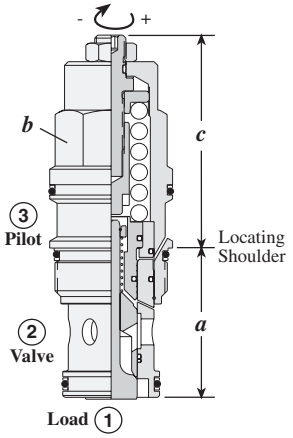

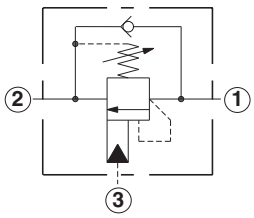

Capacity	Typical Cartridge Model Code	Cavity	Cartridge Dimensions a	b	c L	c C	Installation Torque (Nm)
15 L/min.	**CBBA – LHN**	T - 11A	34,9	22,2	50	56	40/50
30 L/min.	**CBDA – LHN**	T - 2A	34,9	28,6	61	64	60/70
60 L/min.	**CBFA – LHN**	T - 17A	46	31,8	70	84	200/215
80 L/min.	**CBHA – LHN**	T - 19A	63,5	41,3	90	104	465/500

Performance Curves

CBB* **CBD*** **CBF*** **CBH***

Free Flow and Pilot Open Pressure Drop

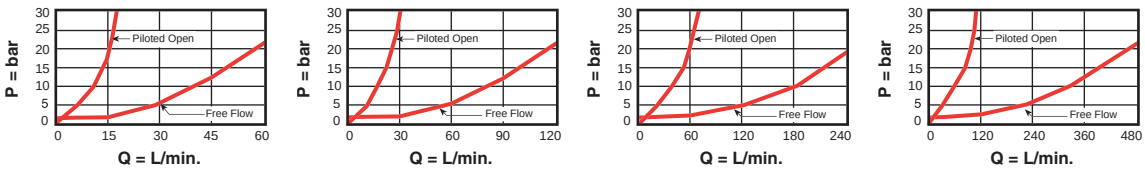

- Restrictive valves have no relief capacity other than as a thermal relief.
- Load holding to 215 bar with 280 bar valve setting
- Maximum valve leakage at reseat = 0,4 cc/min.
- Reseat exceeds 85% of set pressure
- Factory pressure setting established at 32,8 cc/min.
- Counterbalance valves should be set at least 1.3 times the maximum load induced pressure.
- Back pressure at port 2 adds to the effective relief setting at a ratio of 1 plus the pilot ratio times the back pressure.

OPTION ORDERING INFORMATION

Model Codes printed in Red are Preferred Versions and most readily available

CB ★ ★ – ★ ★ ★

Nominal Capacity

B 15 L/min.
D 30 L/min.
F 60 L/min.
H 80 L/min.

Version

A 3:1 Pilot Ratio (with sealed pilot)

Available in CBBY only

Y 2:1 Pilot Ratio (with Bleed through Pilot)

Control**

L Standard Screw
C Tamper Resistant

Cracking Pressure

1,7 Bar Check Spring

H 70 - 280 bar
I 25 - 105 bar

0,3 Bar Check Spring

A 70 - 280 bar
B 25 - 105 bar

Seal

N Buna-N
V Viton

** *See page 162 for information on Control Options*

Adjustment Range Options:
A and H are standard set at 210 bar.
I and B are standard set at 70 bar.
Customer may specify setting.

Visit www.sunhydraulics.com for detailed and complete technical information on our full line of products.

RESTRICTIVE, 350 BAR MAXIMUM SETTING

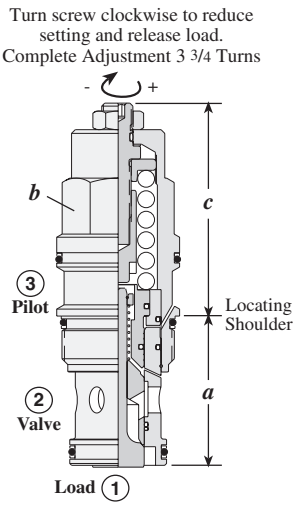

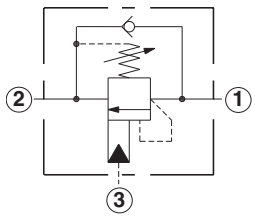

Capacity	Typical Cartridge Model Code	Cavity	Cartridge Dimensions a	b	c L	c C	Installation Torque (Nm)
15 L/min.	**CBBG – LJN**	T - 11A	34,9	22,2	50	56	40/50
30 L/min.	**CBDG – LJN**	T - 2A	34,9	28,6	61	64	60/70
60 L/min.	**CBFG – LJN**	T - 17A	46	31,8	70	84	200/215
80 L/min.	**CBHG – LJN**	T - 19A	63,5	41,3	90	104	465/500

Performance Curves

CBB* **CBD*** **CBF*** **CBH***

Free Flow and Pilot Open Pressure Drop

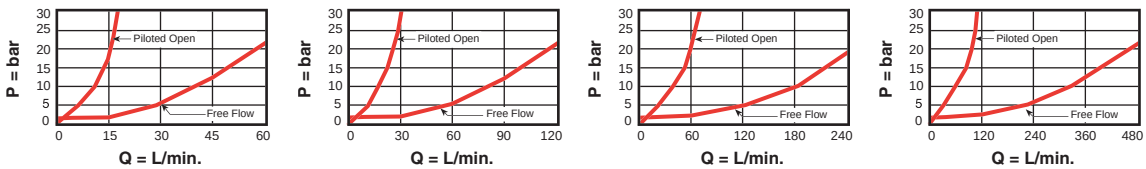

- Restrictive valves have no relief capacity other than as a thermal relief.
- Load holding to 270 bar with 350 bar valve setting
- Maximum valve leakage at reseat = 0,4 cc/min.
- Reseat exceeds 85% of set pressure
- Factory pressure setting established at 32,8 cc/min.
- Counterbalance valves should be set at least 1.3 times the maximum load induced pressure.
- Back pressure at port 2 adds to the effective relief setting at a ratio of 1 plus the pilot ratio times the back pressure.

OPTION ORDERING INFORMATION

Model Codes printed in Red are Preferred Versions and most readily available

CB ★ ★ – ★ ★ ★

Nominal Capacity

B 15 L/min.
D 30 L/min.
F 60 L/min.
H 80 L/min.

Version

G 4.5:1 Pilot Ratio (with sealed pilot)

Control**

L Standard Screw
C Tamper Resistant

Cracking Pressure

1,7 Bar Check Spring

J 140 - 350 bar
K 70 - 175 bar

0,3 Bar Check Spring

C 140 - 350 bar
D 70 - 175 bar

Seal

N Buna-N
V Viton

*** See page 162 for information on Control Options*

Adjustment Range Options:
J and C are standard set at 210 bar.
K and D are standard set at 140 bar.
Customer may specify setting.

Visit www.sunhydraulics.com for detailed and complete technical information on our full line of products.

WITHOUT PILOT ASSIST, 3 PORT CAVITY

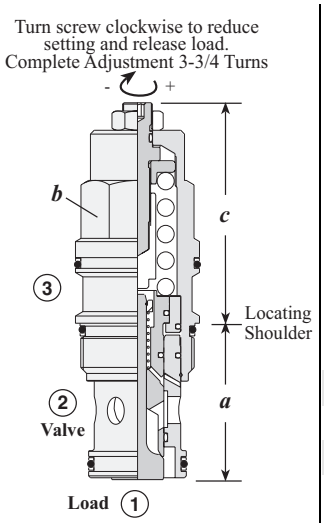

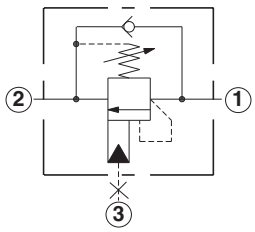

Capacity	Typical Cartridge Model Code	Cavity	Cartridge Dimensions a	b	c L	c C	Installation Torque (Nm)
60 L/min.	**CCCA – LAN**	T - 11A	34,9	22,2	50	56	40/50
120 L/min.	**CCEA – LAN**	T - 2A	34,9	28,6	61	73	60/70
240 L/min.	**CCGA – LAN**	T - 17A	46	31,8	70	84	200/215
480 L/min.	**CCIA – LAN**	T - 19A	63,5	41,3	90	104	465/500

Performance Curves

CCCA **CCEA** **CCGA** **CCIA**

Typical Relief Characteristics

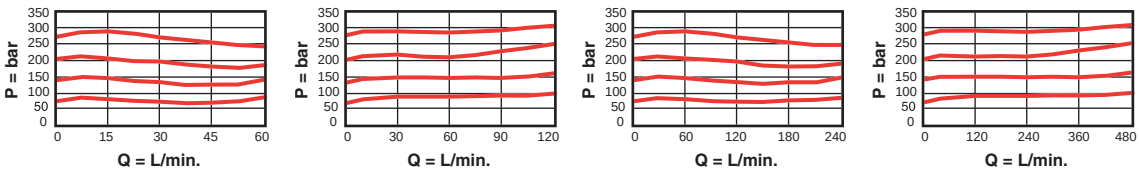

- Maximum operating pressure = 280 bar
- Maximum valve leakage at reseat = 0,4 cc/min.
- Reseat exceeds 85% of set pressure
- Factory pressure setting established at 32,8 cc/min.
- Counterbalance valves should be set at least 1.3 times the maximum load induced pressure.
- Back pressure at port 2 is directly additive to the relief setting of the valve.

OPTION ORDERING INFORMATION

Model Codes printed in Red are Preferred Versions and most readily available

CC ✶ A – ✶ ✶ ✶

Nominal Capacity

C 60 L/min.
E 120 L/min.
G 240 L/min.
I 480 L/min.

Version

A Standard

Control**

L Standard Screw
C Tamper Resistant

Cracking Pressure

1,7 Bar Check Spring

H 70 - 280 bar
I 25 - 105 bar

0,3 Bar Check Spring

A 70 - 280 bar
B 25 - 105 bar

Seal

N Buna-N
V Viton

*** See page 162 for information on Control Options*

Adjustment Range Options:
A and H are standard set at 210 bar.
I and B are standard set at 70 bar.
Customer may specify setting.

Visit www.sunhydraulics.com for detailed and complete technical information on our full line of products.

ATMOSPHERICALLY REFERENCED, 3 PORT CAVITY

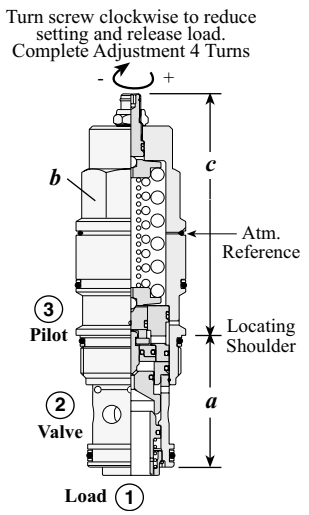

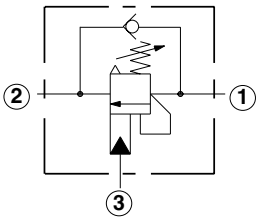

Capacity	Typical Cartridge Model Code	Cavity	Cartridge Dimensions a	b	c L	c C	Installation Torque (Nm)
60 L/min.	**CACA – LHN**	T - 11A	34,9	22,2	74	81	40/50
120 L/min.	**CAEA – LHN**	T - 2A	34,9	28,6	84	90	60/70
240 L/min.	**CAGA – LHN**	T - 17A	46	31,8	96	101	200/215
480 L/min.	**CAIA – LHN**	T - 19A	63,5	41,3	117	126	465/500

Performance Curves

CAC* **CAE*** **CAG*** **CAI***

Free Flow and Pilot Open Pressure Drop

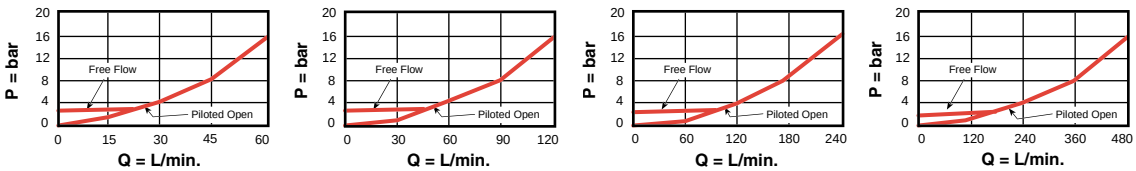

- Load holding to 210 bar with 280 bar valve setting for CA*A, CA*K; 320 bar with 420 bar valve setting for CA*G, CA*L.
- Maximum valve leakage at reseat = 0,4 cc/min.
- Reseat exceeds 85% of set pressure
- Factory pressure setting established at 32,8 cc/min.
- Free flow check cracking pressure = 2,8 bar
- Counterbalance valves should be set at least 1.3 times the maximum load induced pressure.

OPTION ORDERING INFORMATION

Model Codes printed in Red are Preferred Versions and most readily available

CA ★ ★ – ★ ★ ★

Nominal Capacity

- **C** 60 L/min.
- **E** 120 L/min.
- **G** 240 L/min.
- **I** 480 L/min.

Version

- **A** 3:1 Pilot Ratio
- **G** 5:1 Pilot Ratio
- **K** 1:1 Pilot Ratio
- **L** 2:1 Pilot Ratio

Control**

- **L** Standard Screw
- **C** Tamper Resistant

Cracking Pressure

A and K Pilot Ratios

- **H** 70 - 280 bar
- **I** 25 - 105 bar

G and L Pilot Ratios

- **F** 70 - 175 bar
- **G** 140 - 420 bar

Adjustment Range Options:
H is standard set at 210 bar.
I is standard set at 70 bar.
F is standard set at 140 bar.
G is standard set at 280 bar.
Customer may specify setting.

Seal

- **N** Buna-N
- **V** Viton

*** See page 162 for information on Control Options*

Visit www.sunhydraulics.com for detailed and complete technical information on our full line of products.

VENTED, 280 BAR MAXIMUM SETTING

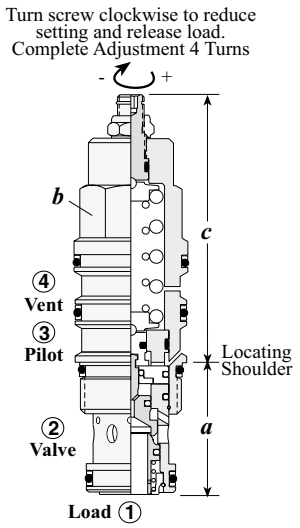

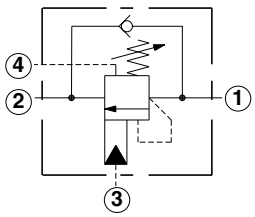

Capacity	Typical Cartridge Model Code	Cavity	Cartridge Dimensions a	b	c L	c C	Installation Torque (Nm)
60 L/min.	**CWCA– LHN**	T - 21A	34,9	22,2	74	81	40/50
120 L/min.	**CWEA– LHN**	T - 22A	34,9	28,6	84	90	60/70
240 L/min.	**CWGA– LHN**	T - 23A	46	31,8	96	101	200/215
480 L/min.	**CWIA – LHN**	T - 24A	63,5	41,3	117	126	465/500

Performance Curves

CWC* **CWE*** **CWG*** **CWI***

Free Flow and Pilot Open Pressure Drop

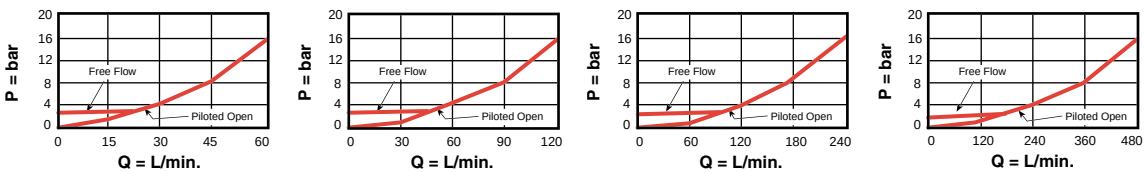

- Load holding to 210 bar with 280 bar valve setting
- Maximum valve leakage at reseat = 0,4 cc/min.
- Reseat exceeds 85% of set pressure
- Factory pressure setting established at 32,8 cc/min.
- Free flow check cracking pressure = 2,8 bar
- Counterbalance valves should be set at least 1.3 times the maximum load induced pressure.

OPTION ORDERING INFORMATION

Model Codes printed in Red are Preferred Versions and most readily available

CW ★ ★ – ★ ★ ★

Nominal Capacity	Version	Control**	Cracking Pressure	Seal
C 60 L/min.	**A** 3:1 Pilot Ratio	**L** Standard Screw	*Pilot Ratios*	**N** Buna-N
E 120 L/min.	**K** 1:1 Pilot Ratio	**C** Tamper Resistant	**H** 70 - 280 bar	**V** Viton
G 240 L/min.			**I** 25 - 105 bar	
I 480 L/min.				

** *See page 162 for information on Control Options*

Adjustment Range Options:
H is standard set at 210 bar.
I is standard set at 70 bar.
Customer may specify setting.

Visit www.sunhydraulics.com for detailed and complete technical information on our full line of products.

VENTED, 420 BAR MAXIMUM SETTING

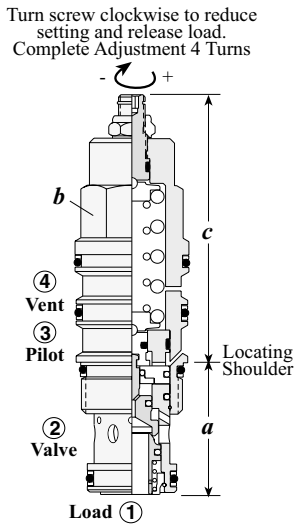

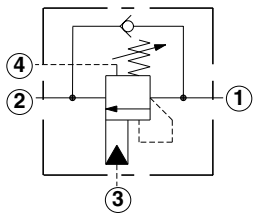

Capacity	Typical Cartridge Model Code	Cavity	Cartridge Dimensions a	b	c L	c C	Installation Torque (Nm)
60 L/min.	**CWCG– LFN**	T - 21A	34,9	22,2	74	81	40/50
120 L/min.	**CWEG– LFN**	T - 22A	34,9	28,6	84	90	60/70
240 L/min.	**CWGG– LFN**	T - 23A	46	31,8	96	101	200/215
480 L/min.	**CWIG – LFN**	T - 24A	63,5	41,3	117	126	465/500

Performance Curves

CWC* **CWE*** **CWG*** **CWI***

Free Flow and Pilot Open Pressure Drop

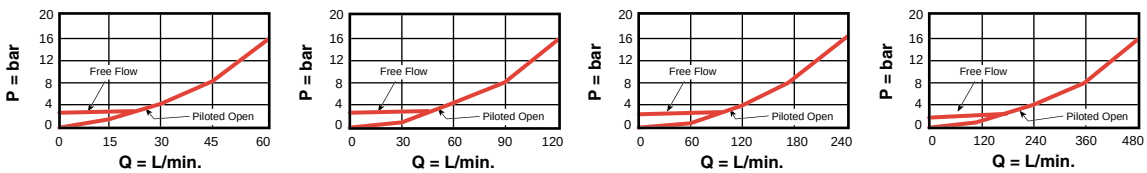

- Load holding to 320 bar with 420 bar valve setting
- Maximum valve leakage at reseat = 0,4 cc/min.
- Reseat exceeds 85% of set pressure
- Factory pressure setting established at 32,8 cc/min.
- Free flow check cracking pressure = 2,8 bar
- Counterbalance valves should be set at least 1.3 times the maximum load induced pressure.

OPTION ORDERING INFORMATION

Model Codes printed in Red are Preferred Versions and most readily available

CW ★ ★ – ★ ★ ★

Nominal Capacity	*Version*	*Control***	*Cracking Pressure*	*Seal*
C 60 L/min.	**G** 5:1 Pilot Ratio	**L** Standard Screw	*Pilot Ratios*	**N** Buna-N
E 120 L/min.	**L** 2:1 Pilot Ratio	**C** Tamper Resistant	**F** 70 - 175 bar	**V** Viton
G 240 L/min.			**G** 140 - 420 bar	
I 480 L/min.				

*** See page 162 for information on Control Options*

Adjustment Range Options:
F is standard set at 140 bar.
G is standard set at 280 bar.
Customer may specify setting.

Visit www.sunhydraulics.com for detailed and complete technical information on our full line of products.

NOTES

Check Cartridge Valves

	Cartridge Type	*Page*
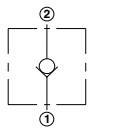	Free Flow Nose to Side	60
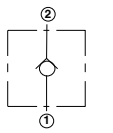	Free Flow Side to Nose	61
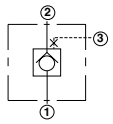	Free Flow Side to Nose, Port 3 Blocked	62
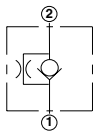	Free Flow Nose to Side with Bypass Orifice	63
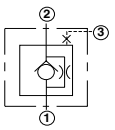	2 To 1 Free Flow, with Customer Specified Orifice, Port 3 Blocked, 3 Port Cavity	64

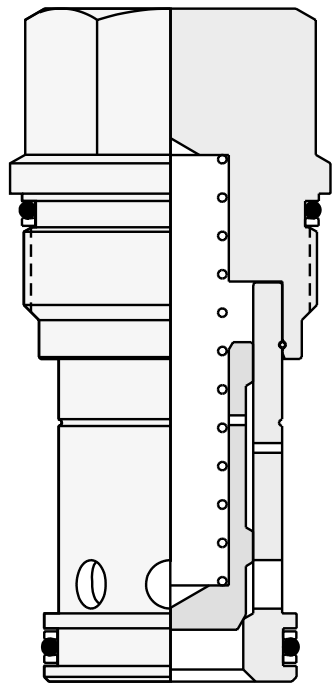

FREE FLOW NOSE TO SIDE

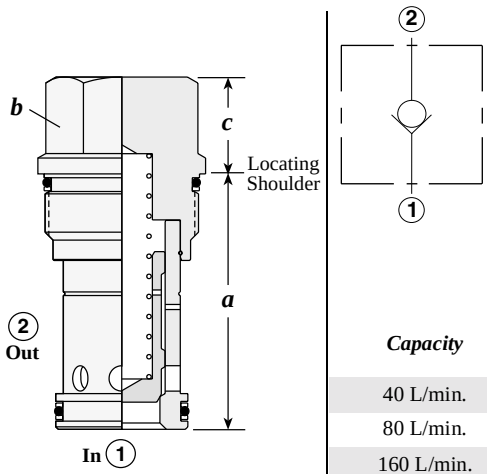

Capacity	Typical Cartridge Model Code	Cavity	Cartridge Dimensions a	b	c X	Installation Torque (Nm)
40 L/min.	**CXBA – XCN**	T - 162A	31	19,1	21	35/40
80 L/min.	**CXDA – XCN**	T - 13A	34,9	22,2	19	40/50
160 L/min.	**CXFA – XCN**	T - 5A	41,1	28,6	18	60/70
320 L/min.	**CXHA – XCN**	T - 16A	61,9	31,8	25	200/215
640 L/min.	**CXJA – XCN**	T - 18A	79,4	41,3	31	465/500

Performance Curves

CXBA **CXDA** **CXFA** **CXHA** **CXJA**

Typical Pressure Drop

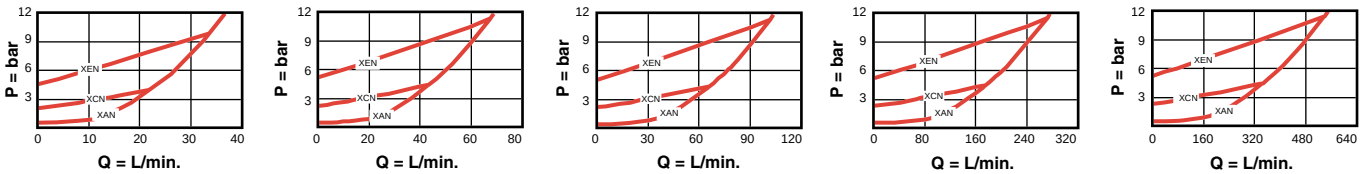

- Maximum operating pressure = 350 bar
- Maximum valve leakage = 0,07 cc/min.
- Will accept 350 bar at ports 1 and 2.

OPTION ORDERING INFORMATION

Model Codes printed in Red are Preferred Versions and most readily available

CX ✶ A – ✶ ✶ ✶

Nominal Capacity	*Control***	*Cracking Pressure*	*Seal*
B 40 L/min.	**X** Non-adjustable	**A** 0,3 bar	**N** Buna-N
D 80 L/min.		**B** 1,0 bar	**V** Viton
F 160 L/min.		**C** 2,0 bar	
H 320 L/min.		**D** 3,5 bar	
J 640 L/min.		**E** 5,0 bar	
		F 7,0 bar	

** *See page 162 for information on Control Options*

Visit www.sunhydraulics.com for detailed and complete technical information on our full line of products.

FREE FLOW SIDE TO NOSE

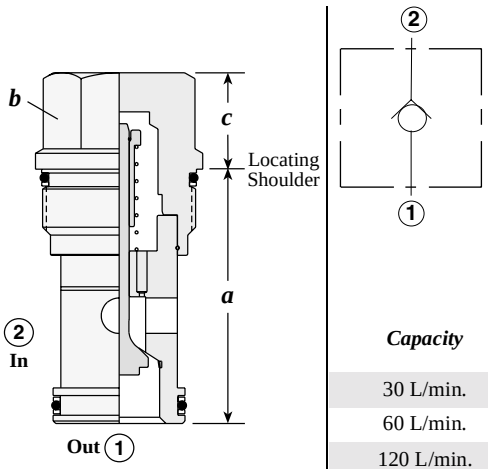

Capacity	Typical Cartridge Model Code	Cavity	Cartridge Dimensions a	b	c X	Installation Torque (Nm)
30 L/min.	**CXAD – XCN**	T - 162A	31	19,1	21	35/40
60 L/min.	**CXCD – XCN**	T - 13A	34,9	22,2	19	40/50
120 L/min.	**CXED – XCN**	T - 5A	41,1	28,6	18	60/70
240 L/min.	**CXGD – XCN**	T - 16A	61,9	31,8	25	200/215
480 L/min.	**CXID – XCN**	T - 18A	79,4	41,3	31	465/500

Performance Curves

CXAD **CXCD** **CXED** **CXGD** **CXID**

Typical Pressure Drop

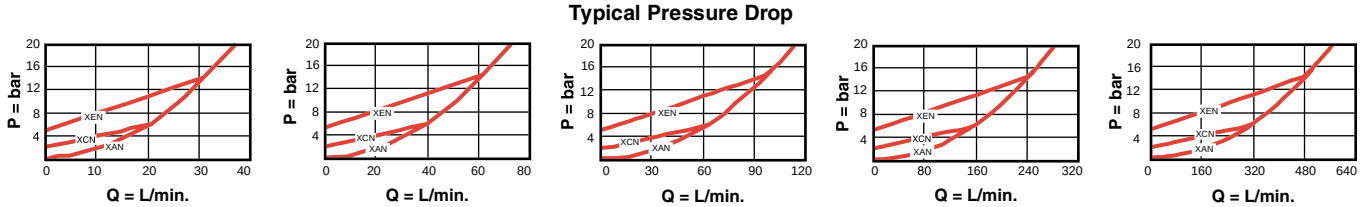

- Maximum operating pressure = 350 bar
- Maximum valve leakage = 0,07 cc/min.
- Will accept 350 bar at ports 1 and 2.
- CXAD only available with 0,3, 2 and 5 bar cracking pressures.

OPTION ORDERING INFORMATION

Model Codes printed in Red are Preferred Versions and most readily available

CX ✶ D – ✶ ✶ ✶

Nominal Capacity	*Control***	*Cracking Pressure*	*Seal*
A* 30 L/min.	**X** Non-adjustable	**A** 0,3 bar	**N** Buna-N
C 60 L/min.		**B** 1,0 bar	**V** Viton
E 120 L/min.		**C** 2,0 bar	
G 240 L/min.		**D** 3,5 bar	
I 480 L/min.		**E** 5,0 bar	
		F 7,0 bar	

** *See page 162 for information on Control Options*

* *CXAD available with A, C, E Cracking Pressures Only.*

Visit www.sunhydraulics.com for detailed and complete technical information on our full line of products.

FREE FLOW SIDE TO NOSE, PORT 3 BLOCKED

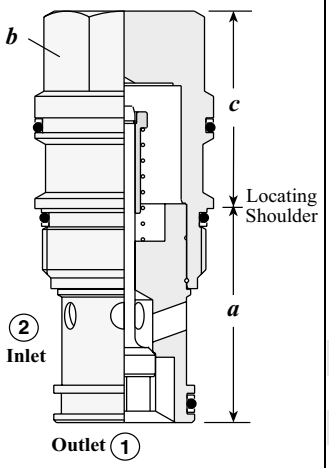

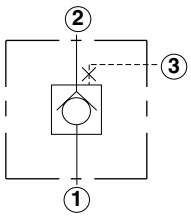

Capacity	*Typical Cartridge Model Code*	*Cavity*	*Cartridge Dimensions* *a*	*b*	*c* X	*Installation Torque (Nm)*
60 L/min.	**CXCE – XCN**	T - 11A	34,9	22,2	31	40/50
120 L/min.	**CXEE – XCN**	T - 2A	34,9	28,6	35	60/70
240 L/min.	**CXGE – XCN**	T - 17A	46	31,8	46	200/215
480 L/min.	**CXIE – XCN**	T - 19A	63,5	41,3	59	465/500

Performance Curves

CXCE **CXEE** **CXGE** **CXIE**

Typical Pressure Drop

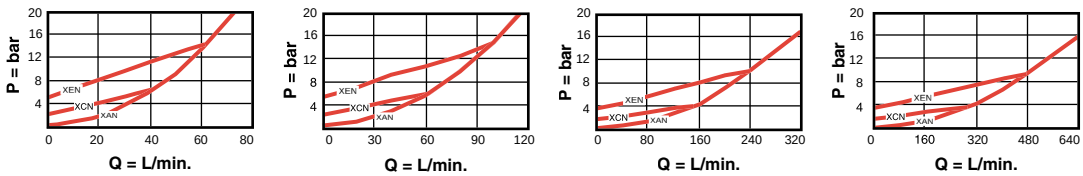

- Maximum operating pressure = 350 bar
- Maximum valve leakage = 0,07 cc/min.
- Will accept 350 bar at ports 1 and 2.

OPTION ORDERING INFORMATION

Model Codes printed in Red are Preferred Versions and most readily available

CX ★ E – ★ ★ ★

Nominal Capacity	*Control***	*Cracking Pressure*	*Seal*
C 60 L/min.	**X** Non-adjustable	**A** 0,3 bar	**N** Buna-N
E 120 L/min.		**B** 1,0 bar	**V** Viton
G 240 L/min.		**C** 2,0 bar	
I 480 L/min.		**D** 3,5 bar	
		E 5,0 bar	
		F 7,0 bar	

*** See page 162 for information on Control Options*

Visit www.sunhydraulics.com for detailed and complete technical information on our full line of products.

FREE FLOW NOSE TO SIDE WITH BYPASS ORIFICE

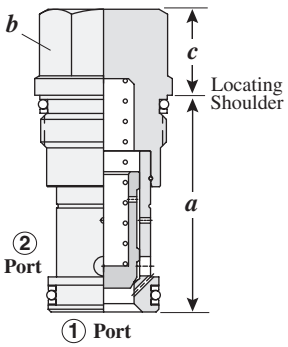

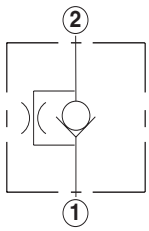

Capacity	*Typical Cartridge Model Code*	*Cavity*	*Cartridge Dimensions* *a*	*b*	*c* X	*Installation Torque (Nm)*
30 L/min.	**CNBC – XCN**	T - 162A	31,0	19,1	20,8	35/40
60 L/min.	**CNDC – XCN**	T - 13A	35,1	22,2	19,1	45/50
120 L/min.	**CNFC – XCN**	T - 5A	41,4	28,6	17,5	60/70
240 L/min.	**CNHC – XCN**	T - 16A	61,7	31,8	24,6	200/215
480 L/min.	**CNJC – XCN**	T - 18A	79,5	41,3	30,2	465/500

Performance Curves

CNBC **CNDC** **CNFC** **CNHC** **CNJC**

Typical Pressure Drop

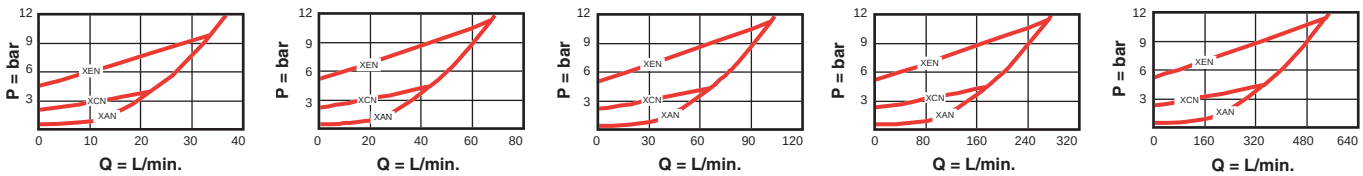

- Maximum operating pressure = 350 bar
- Will accept 350 bar at ports 1 and 2.
- Orifice range = CNBC, CNDC: 0,4 - 1,6 mm, CNFC: 0,4 - 2,0 mm, CNHC: 0,4 - 2,4 mm, CNJC: 0,4 - 3,2 mm.

OPTION ORDERING INFORMATION

Model Codes printed in Red are Preferred Versions and most readily available

CN ✶ C – ✶ ✶ ✶

Nominal Capacity	*Control***	*Cracking Pressure*	*Seal*
B 30 L/min.	**X** Non-adjustable	**A** 0,3 bar	**N** Buna-N
D 60 L/min.		**B** 1,0 bar	**V** Viton
F 120 L/min.		**C** 2,0 bar	
H 240 L/min.		**D** 3,5 bar	
J 480 L/min.		**E** 5,0 bar	
		F 7,0 bar	

***See page 162 for information on Control Options*

Customer specified orifice setting range:
CNBC: 0,4 - 1,6 mm
CNDC: 0.4 - 1,6 mm
CNFC: 0,4 - 2,0 mm
CNHC: 0,4 - 2,4 mm
CNJC: 0,4 - 3,2 mm

Visit www.sunhydraulics.com for detailed and complete technical information on our full line of products.

2 TO 1 FREE FLOW, WITH CUSTOMER SPECIFIED ORIFICE, PORT 3 BLOCKED, 3 PORT CAVITY

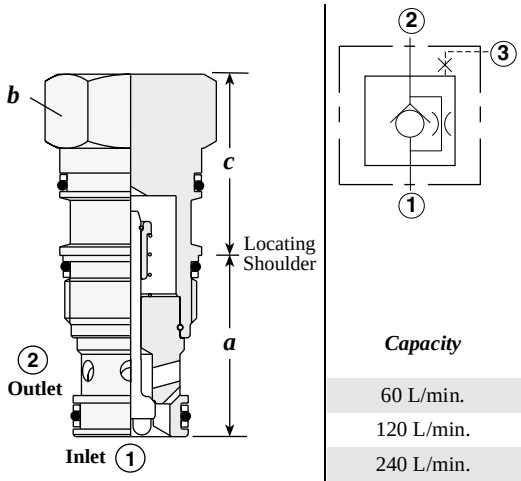

Capacity	*Typical Cartridge Model Code*	*Cavity*	*Cartridge Dimensions*			*Installation Torque (Nm)*
			a	*b*	*c* X	
60 L/min.	**CNCD – XCN**	T - 11A	34,9	22,2	31	40/50
120 L/min.	**CNED – XCN**	T - 2A	34,9	28,6	35	60/70
240 L/min.	**CNGD – XCN**	T - 17A	46	31,8	46	200/215
480 L/min.	**CNID – XCN**	T - 19A	63,5	41,3	59	465/500

Performance Curves

CNCD **CNED** **CNGD** **CNID**

Typical Pressure Drop

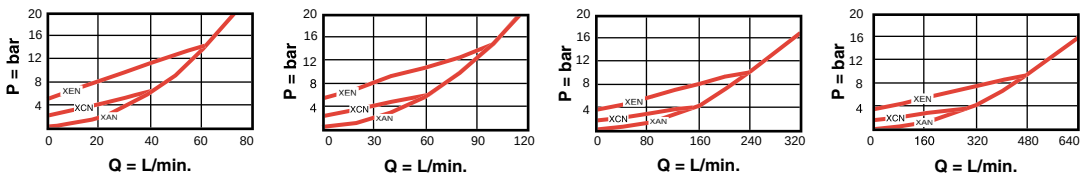

- Maximum operating pressure = 350 bar
- Will accept 350 bar at ports 1 and 2
- Orifice range = CNCD: 0,4 - 1,6 mm, CNED: 0,4 - 2,0 mm, CNGD: 0,4 - 2,4 mm, CNID: 0,4 - 3,2 mm

OPTION ORDERING INFORMATION

Model Codes printed in Red are Preferred Versions and most readily available

CN ✶ D – ✶ ✶ ✶

Nominal Capacity	*Control***	*Cracking Pressure*	*Seal*
C 60 L/min.	**X** Non-adjustable	**A** 0,3 bar	**N** Buna-N
E 120 L/min.		**B** 1,0 bar	**V** Viton
G 240 L/min.		**C** 2,0 bar	
I 480 L/min.		**D** 3,5 bar	
		E 5,0 bar	
		F 7,0 bar	

** *See page 162 for information on Control Options*

Customer specified orifice setting range:
CNCD: 0.4 - 1,6 mm
CNED: 0,4 - 2,0 mm
CNGD: 0,4 - 2,4 mm
CNID: 0,4 - 3,2 mm

Visit www.sunhydraulics.com for detailed and complete technical information on our full line of products.

Flow Control Valves

	Cartridge Type	*Page*
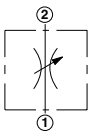	Fully Adjustable Needle	66
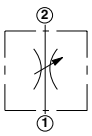	Fully Adjustable Needle, High Capacity	67
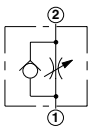	Fully Adjustable Needle with Reverse Flow Check	68
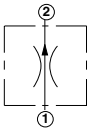	Fixed Orifice, Pressure Compensated	69
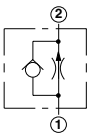	Fixed Orifice, Pressure Compensated with Reverse Flow Check	70
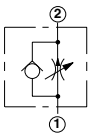	Fully Adjustable Pressure Compensated with Reverse Flow Check	71
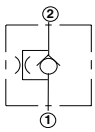	Free Flow Side-to-Nose with Bypass Orifice	72
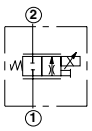	Electro-proportional, Normally Closed Throttle	73
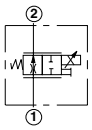	Electro-proportional, Normally Open Throttle	74

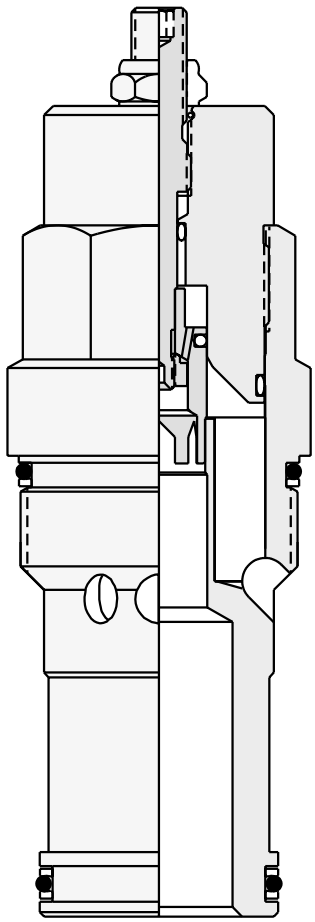

FULLY ADJUSTABLE NEEDLE

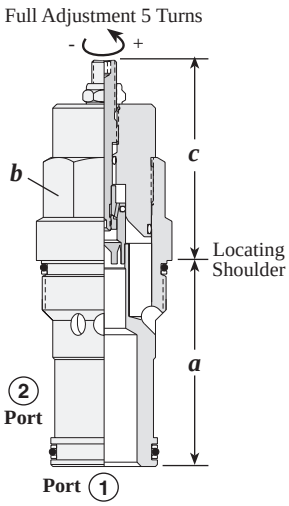

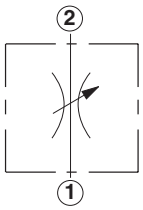

Maximum Nominal Orifice	*Typical Cartridge Model Code*	*Cavity*	*Cartridge Dimensions*					*Installation Torque (Nm)*
			a	*b*	*c*			
					L	H	K	
4,0 mm dia.	**NFBC – LCN**	T - 162A	31	19,1	41	-	45	35/40
4,8 mm dia.	**NFCC – LCN**	T - 13A	34,9	22,2	58	64	64	40/50
6,3 mm dia.	**NFDC – LAN**	T - 5A	41,1	28,6	67	72	73	60/70
9,6 mm dia.	**NFEC – LEN**	T - 16A	61,9	31,8	73	79	79	200/215
14,2 mm dia.	**NFFC – LGN**	T - 18A	79,4	41,3	84	90	90	465/500

Performance Curves

NFBC **NFCC** **NFDC** **NFEC** **NFFC**

Adjustment Sensitivity at 7 bar Differential

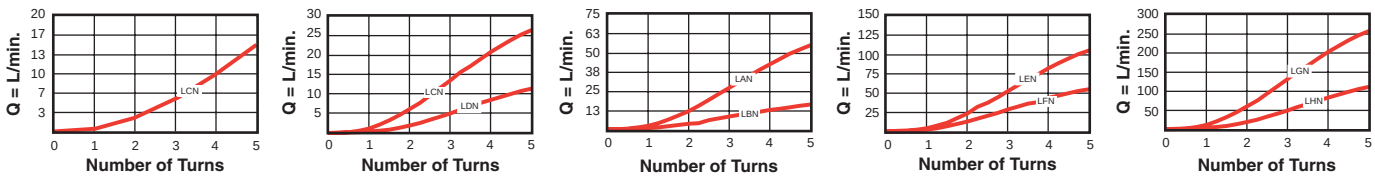

- Maximum operating pressure = 350 bar
- Maximum valve leakage at shutoff = less than 0,4 cc/min.

OPTION ORDERING INFORMATION

Model Codes printed in Red are Preferred Versions and most readily available

NF ✶ C – ✶ ✶ ✶

Maximum Nominal Orifice

- **B** 4,0 mm dia.
- **C** 4,8 mm dia.
- **D** 6,3 mm dia.
- **E** 9,6 mm dia.
- **F** 14,2 mm dia.

Control**

- **L** Standard Screw
- **H** Calibrated Handknob with Detent Lock
- **K** Handknob

Orifice Options

NFBC
- **C** 4 mm

NFCC
- **C** 4,8 mm
- **D** 2,5 mm

NFDC
- **A** 6,3 mm
- **B** 3,2 mm

NFEC
- **E** 9,6 mm
- **F** 7,1 mm

NFFC
- **G** 14,2 mm
- **H** 9,6 mm

Seal

- **N** Buna-N
- **V** Viton

** *See page 162 for information on Control Options*

Visit www.sunhydraulics.com for detailed and complete technical information on our full line of products.

FULLY ADJUSTABLE NEEDLE, HIGH CAPACITY

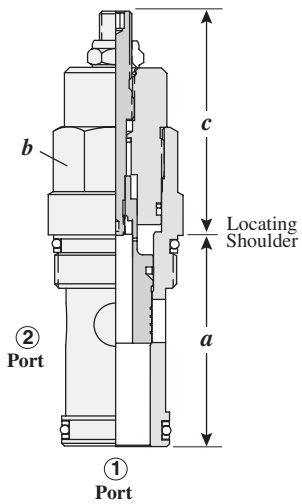

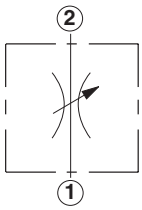

Nominal Orifice	*Typical Cartridge Model Code*	*Cavity*	*Cartridge Dimensions*					*Installation Torque (Nm)*
			a	*b*	*c*			
					L	H	K	
8,4 mm dia.	**NFCD – LFN**	T - 13A	34,9	22,2	58	64	64	40/50
12,7 mm dia.	**NFDD – LGN**	T - 5A	41,1	28,6	67	72	73	60/70
17,5 mm dia.	**NFED – LHN**	T - 16A	61,9	31,8	73	79	79	200/215
21,6 mm dia.	**NFFD – LIN**	T - 18A	79,4	41,3	84	90	90	465/500

Performance Curves

NFCD **NFDD** **NFED** **NFFD**

Adjustment Sensitivity at 7 bar Differential

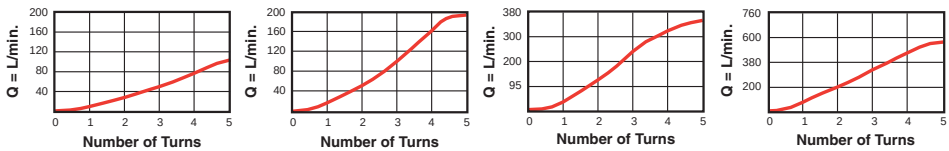

- Maximum operating pressure = 350 bar
- Maximum valve leakage at shutoff = less than 0,4 cc/min.

OPTION ORDERING INFORMATION

Model Codes printed in Red are Preferred Versions and most readily available

NF ★ D – ★ ★ ★

Nominal Orifice

C 8,4 mm dia.

D 12,7 mm dia.

E 17,5 mm dia.

F 21,6 mm dia.

Control**

L Standard Screw

H Calibrated Handknob with Detent Lock

K Handknob

Orifice Options

NFCD

F 8,4 mm

NFDD

G 12,7 mm

NFED

H 17,5 mm

NFFD

I 21,6 mm

Seal

N Buna-N

V Viton

** *See page 162 for information on Control Options*

Visit www.sunhydraulics.com for detailed and complete technical information on our full line of products.

FULLY ADJUSTABLE NEEDLE WITH REVERSE FLOW CHECK

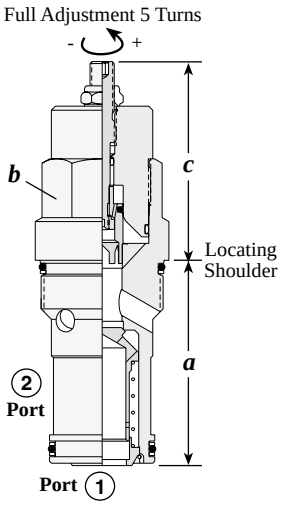

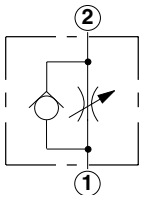

Maximum Nominmal Orifice	Typical Cartridge Model Code	Cavity	Cartridge Dimensions a	b	c L	c H	c K	Installation Torque (Nm)
4,0 mm dia.	**NCBB – LCN**	T - 162A	31	19,1	41	-	45	35/40
4,8 mm dia.	**NCCB – LCN**	T - 13A	34,9	22,2	58	64	64	40/50
6,3 mm dia.	**NCEB – LCN**	T - 5A	41,1	28,6	67	72	73	60/70
9,6 mm dia.	**NCFB – LCN**	T - 16A	61,9	31,8	73	79	79	200/215
14,2 mm dia.	**NCGB – LCN**	T - 18A	79,4	41,3	84	90	90	465/500

Performance Curves

NCBB **NCCB** **NCEB** **NCFB** **NCGB**

Adjustment Sensitivity at 7 bar Differential

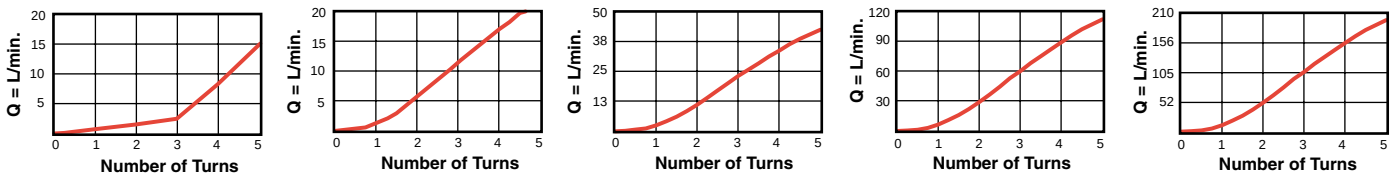

- Maximum operating pressure = 350 bar
- Maximum valve leakage = 0,4 cc/min.

OPTION ORDERING INFORMATION **Model Codes printed in Red are Preferred Versions and most readily available**

NC ✶ ✶ – ✶ C ✶

Maximum Nominal Orifice

NCBB* 4,0 mm dia.

NCCB 4,8 mm dia.
NCCC 2,3 mm dia.

NCEB 6,3 mm dia.
NCEC 3,2 mm dia.

NCFB 9,6 mm dia.
NCFC 7,1 mm dia.

NCGB 14,2 mm dia.
NCGC 9,6 mm dia.

Version

B High Capacity

C Low Capacity

*Control***

L Standard Screw

H Calibrated Handknob with Detent Lock

K Handknob

*Cracking Pressure**

A 0,3 bar

C 2,0 bar

E 5,0 bar

Seal

N Buna-N

V Viton

** *See page 162 for information on Control Options*

**Cracking Pressure Ranges:*
A and E ranges are not available in T-162A cavity.

Visit www.sunhydraulics.com for detailed and complete technical information on our full line of products.

FIXED ORIFICE, PRESSURE COMPENSATED

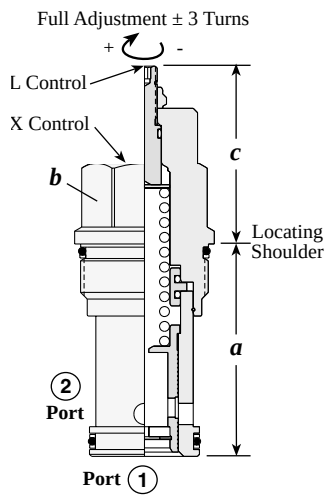

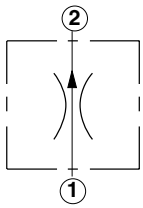

Nominal Capacity	*Typical Cartridge Model Code*	*Cavity*	*Cartridge Dimensions*					*Installation Torque (Nm)*
			a	*b*	*c*			
					X	L	K	
0,4-12 L/min.	**FXBA – XAN**	T - 162A	31	19,1	21	54	58	35/40
0,4-25 L/min.	**FXCA – XAN**	T - 13A	34,9	22,2	19	51	58	40/50
0,4-50 L/min.	**FXDA – XAN**	T - 5A	41,1	28,6	18	54	61	60/70
0,8-100 L/min.	**FXEA – XAN**	T - 16A	61,9	31,8	25	62	69	200/215
0,8-200 L/min.	**FXFA – XAN**	T - 18A	79,4	41,3	31	72	78	465/500

Performance Curves

FXBA **FXCA** **FXDA** **FXEA** **FXFA**

Typical Performance

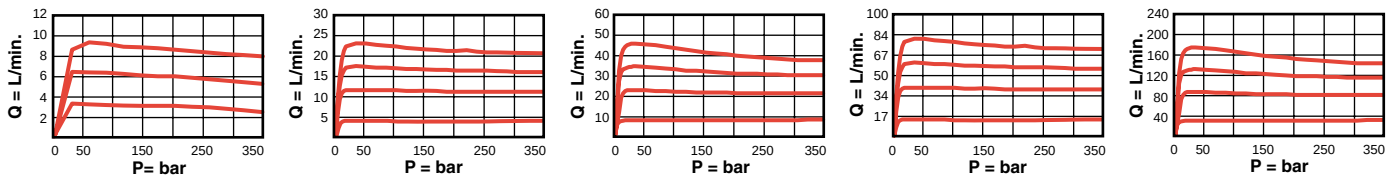

- Maximum operating pressure = 350 bar
- Customer must specify flow setting
- Accurate pressure compensated control requires that a 14 bar minimum pressure differential be maintained across the valve.
- The tuneable control option provides +/- 25% variation from the nominal factory pre-set flow.

OPTION ORDERING INFORMATION **Model Codes printed in Red are Preferred Versions and most readily available**

FX ✶ A – ✶ A ✶

Nominal Capacity

- **B** 0,4-12 L/min.
- **C** 0,4-25 L/min.
- **D** 0,4-50 L/min.
- **E** 0,8-100 L/min.
- **F** 0,8-200 L/min.

*Control***

- **X** Non-adjustable Factory set at customer specified flow
- **L** Tuning Adjustment ±25% of customer specified flow
- **K** Handknob with **L** control

Adjustment Range

- **A** Fixed Orifice

Customer must specify flow

Seal

- **N** Buna-N
- **V** Viton

*** See page 162 for information on Control Options*

Visit www.sunhydraulics.com for detailed and complete technical information on our full line of products.

FIXED ORIFICE, PRESSURE COMPENSATED WITH REVERSE FLOW CHECK

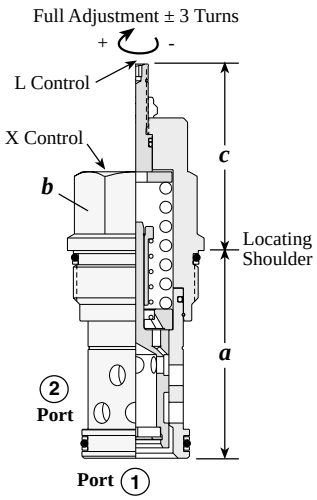

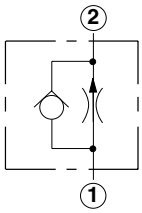

Nominal Capacity	*Typical Cartridge Model Code*	*Cavity*	*Cartridge Dimensions*					*Installation Torque (Nm)*
			a	*b*	*c*			
					X	L	K	
0,4-12 L/min.	**FCBB – XAN**	T - 162A	31	19,1	21	54	58	35/40
0,4-25 L/min.	**FCCB – XAN**	T - 13A	34,9	22,2	19	51	58	40/50
0,4-50 L/min.	**FCDB – XAN**	T - 5A	41,1	28,6	18	54	61	60/70
0,8-100 L/min.	**FCEB – XAN**	T - 16A	61,9	31,8	25	62	69	200/215
0,8-200 L/min.	**FCFB – XAN**	T - 18A	79,4	41,3	31	72	78	465/500

Performance Curves

FCBB **FCCB** **FCDB** **FCEB** **FCFB**

Reverse Free Flow Pressure Drop Based on Specified Flow Extremes

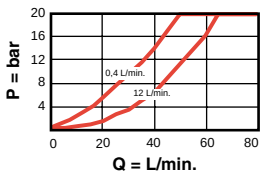

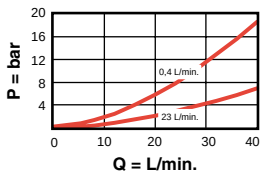

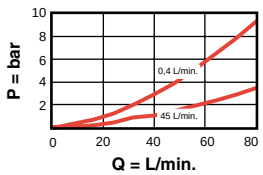

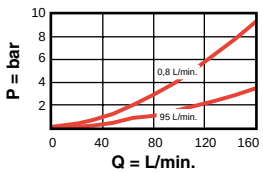

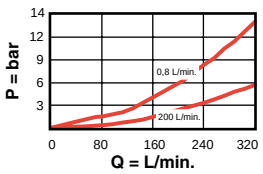

- Maximum operating pressure = 350 bar
- Customer must specify flow setting
- Accurate pressure compensated control requires that a 14 bar minimum pressure differential be maintained across the valve.
- The tuneable control option provides +/- 25% variation from the nominal factory pre-set flow.

OPTION ORDERING INFORMATION **Model Codes printed in Red are Preferred Versions and most readily available**

FC ✶ B – ✶ A ✶

Nominal Capacity

B 0,4-12 L/min.

C 0,4-25 L/min.

D 0,4-50 L/min.

E 0,8-100 L/min.

F 0,8-200 L/min.

Control**

X Non-adjustable Factory set at customer specified flow

L Tuning Adjustment ±25% of customer specified flow

K Handknob with **L** control

Adjustment Range

A Fixed Orifice

Customer must specify flow

Seal

N Buna-N

V Viton

*** See page 162 for information on Control Options*

Visit www.sunhydraulics.com for detailed and complete technical information on our full line of products.

FULLY ADJUSTABLE, PRESSURE COMPENSATED WITH REVERSE FLOW CHECK

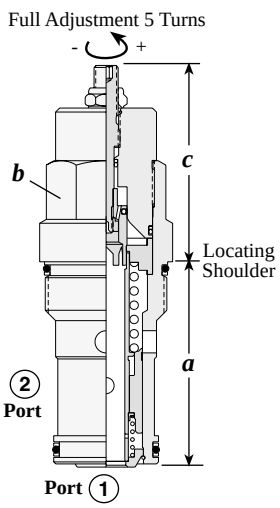

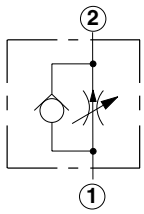

Nominal Flow Range	*Typical Cartridge Model Code*	*Cavity*	*Cartridge Dimensions*					*Installation Torque (Nm)*
			a	*b*	*c*			
					L	H	K	
0,4-23 L/min.	**FDBA – LAN**	T - 13A	34,9	22,2	58	64	64	40/50
0,4-45 L/min.	**FDCB – LAN**	T - 5A	41,1	28,6	67	72	73	60/70
1-95 L/min.	**FDEA – LAN**	T - 16A	61,9	31,8	73	79	79	200/215
1-200 L/min.	**FDFA – LAN**	T - 18A	79,4	41,3	84	90	90	465/500

Performance Curves

FDBA **FDCB** **FDEA** **FDFA**

Typical Performance

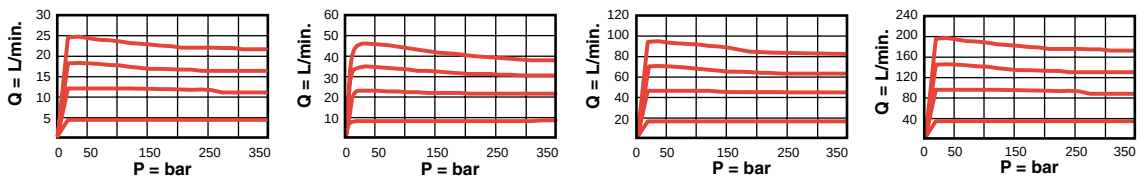

- Maximum operating pressure = 350 bar
- Accurate pressure compensated control requires that a 14 bar minimum pressure differential be maintained across the valve.

OPTION ORDERING INFORMATION **Model Codes printed in Red are Preferred Versions and most readily available**

FD ✶✶ – ✶ A ✶

Nominal Flow Range

BA 0,4-23 L/min.

CB 0,4-45 L/min.

EA 1-95 L/min.

FA 1-200 L/min.

*Control***

L Standard Screw

H Calibrated Handknob with Detent Lock

K Handknob

Adjustment Range

FDBA
A 0,4 - 23 L/min.

FDCB
A 0,4 - 45 L/min.

FDEA
A 1 - 95 L/min.

FDFA
A 1 - 200 L/min.

Seal

N Buna-N

V Viton

*** See page 162 for information on Control Options*

Visit www.sunhydraulics.com for detailed and complete technical information on our full line of products.

FREE FLOW SIDE-TO-NOSE WITH BYPASS ORIFICE

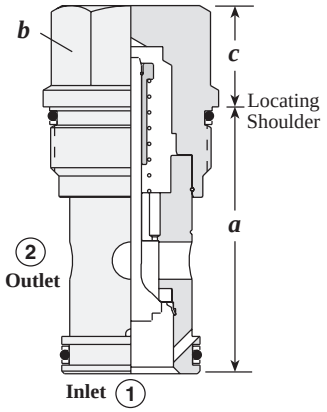

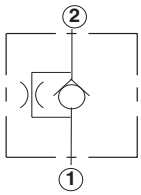

Nominal Capacity	Typical Cartridge Model Code	Cavity	Cartridge Dimensions a	Cartridge Dimensions b	Cartridge Dimensions c X	Installation Torque (Nm)
30 L/min.	**CNAC – XCN**	T - 162A	31	19,1	21	35/40
60 L/min.	**CNCC – XCN**	T - 13A	34,9	22,2	19	40/50
120 L/min.	**CNEC – XCN**	T - 5A	41,1	28,6	18	60/70
240 L/min.	**CNGC – XCN**	T - 16A	61,9	31,8	25	200/215
480 L/min.	**CNIC – XCN**	T - 18A	79,4	41,3	31	465/500

Performance Curves

CNAC **CNCC** **CNEC** **CNGC** **CNIC**

Typical Pressure Drop for Nominal Cracking Pressures

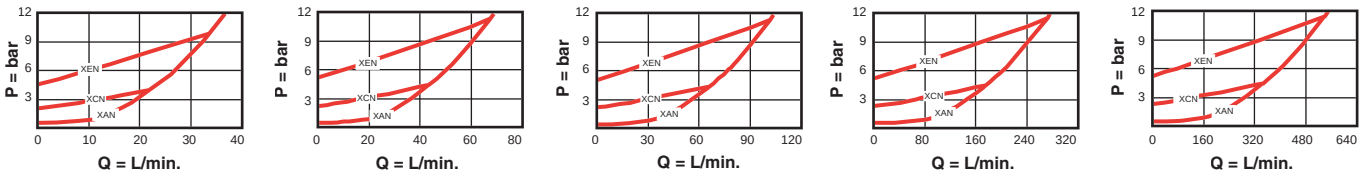

- Maximum operating pressure = 350 bar
- Will accept 350 bar at ports 1 and 2.
- * Orifice range = CNAC, CNCC: 0,4 - 1,6 mm, CNEC: 0,4 - 2,0 mm, CNGC: 0,4 - 2,4 mm, CNIC: 0,4 - 3,2 mm.

OPTION ORDERING INFORMATION

Model Codes printed in Red are Preferred Versions and most readily available

CN ★ C – ★ ★ ★

Nominal Capacity	*Control***	*Cracking Pressure*	*Seal*
A 30 L/min.	**X** Non-adjustable	**A** 0,3 bar	**N** Buna-N
C 60 L/min.		**B** 1,0 bar	**V** Viton
E 120 L/min.		**C** 2,0 bar	
G 240 L/min.		**D** 3,5 bar	
I 480 L/min.		**E** 5,0 bar	
		F 7,0 bar	

** *See page 162 for information on Control Options*

* **Customer specified orifice setting range:**
CNAC: 0,4 - 1,6 mm
CNCC: 0.4 - 1,6 mm
CNEC: 0,4 - 2,0 mm
CNGC: 0,4 - 2,4 mm
CNIC: 0,4 - 3,2 mm

Visit www.sunhydraulics.com for detailed and complete technical information on our full line of products.

ELECTRO-PROPORTIONAL, NORMALLY CLOSED THROTTLE

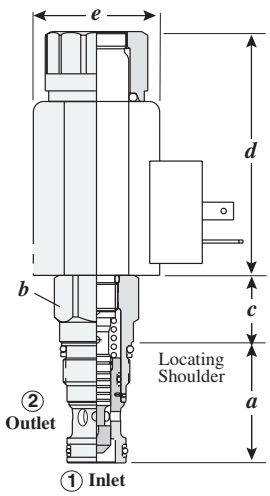

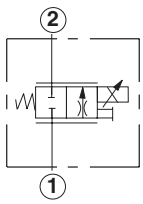

Maximum Nominal Capacity	*Typical Cartridge Model Code*	*Cavity*	*Cartridge Dimensions*					*Installation Torque (Nm)*
			a	*b*	*c*	*d*	*e*	
28 L/min.	**FPCC – MCN**	T - 13A	35,1	22,2	19,1	70,1	37,3	40/50

Performance Curves

FPCC

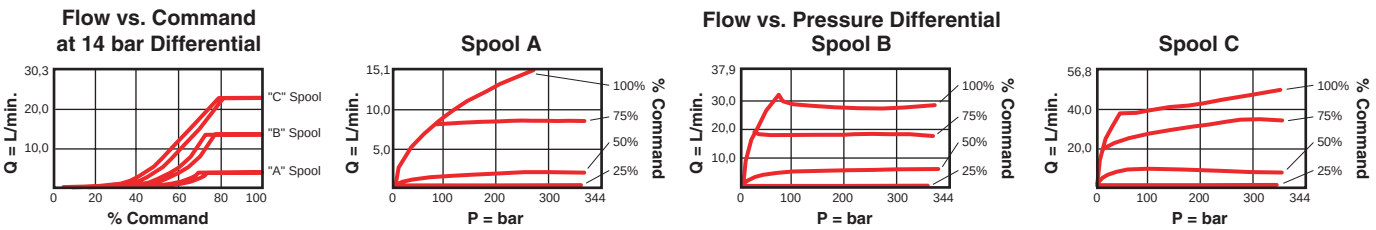

- Maximum operating pressure = 350 bar
- Maximum valve leakage = 100 cc/min. at 210 bar
- For optimum performance, an amplifier with current sensing and adjustable dither should be used. Dither should be adjustable between 100 - 250 Hz.

OPTION ORDERING INFORMATION

Model Codes printed in Red are Preferred Versions and most readily available

FP C C – ★ ★ ★

Maximum Nominal Capacity	*Control***	*Nominal Capacity*	*Seal*
C 28 L/min.	**M** Manual Override (Standard)	**A** 6 L/min.	**N** Buna-N
	NOTE: Coil must be ordered separately. Use 12V DC or 24V DC (Series 770-*) coils only. See page 167.**	**B** 14 L/min.	**V** Viton
		C 28 L/min.	

** *See page 162 for information on Control Options*

Visit www.sunhydraulics.com for detailed and complete technical information on our full line of products.

ELECTRO-PROPORTIONAL, NORMALLY OPEN THROTTLE

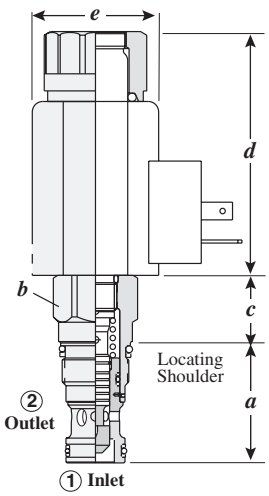

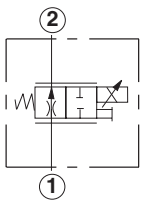

Maximum Nominal Capacity	*Typical Cartridge Model Code*	*Cavity*	*Cartridge Dimensions* a	b	c	d	e	*Installation Torque (Nm)*
28 L/min.	**FPCH – MCN**	T - 13A	35,1	22,2	19,1	70,1	1,47	40/50

Performance Curves

FPCH

Flow vs. Command at 14 bar Differential

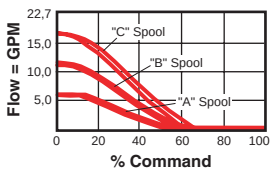

Spool A

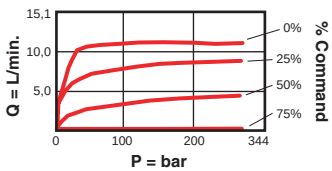

Flow vs. Pressure Differential Spool B

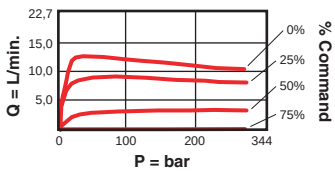

Spool C

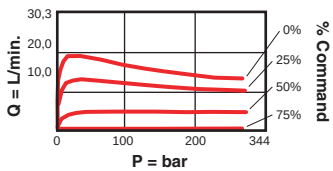

- Maximum operating pressure = 350 bar
- Maximum valve leakage = 100 cc/min. at 210 bar
- For optimum performance, an amplifier with current sensing and adjustable dither should be used. Dither should be adjustable between 100 - 250 Hz.

OPTION ORDERING INFORMATION **Model Codes printed in Red are Preferred Versions and most readily available**

FP C H – ★ ★ ★

Maximum Nominal Capacity	*Control***	*Nominal Capacity*	*Seal*
C 28 L/min.	**D** Manual Override (Standard)	**A** 6 L/min.	**N** Buna-N
		B 14 L/min.	**V** Viton
		C 20 L/min.	

** *See page 162 for information on Control Options*

Visit www.sunhydraulics.com for detailed and complete technical information on our full line of products.

Priority Flow Control Cartridge Valves

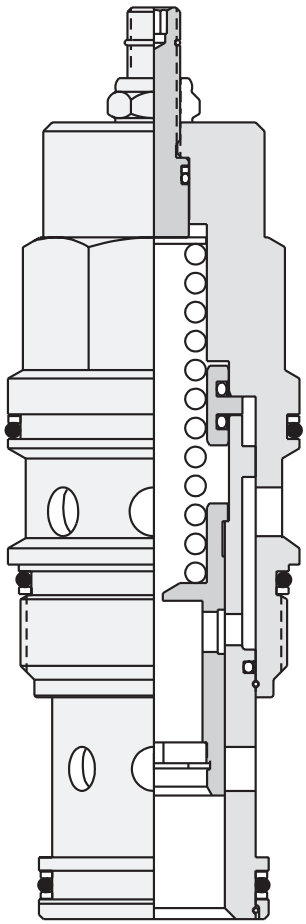

	Cartridge Type	*Page*
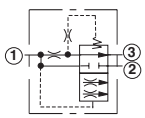	Bypass / Restrictive, Fixed Orifice	76
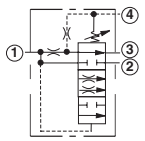	Ventable, Bypass / Restrictive, Fixed Orifice	77
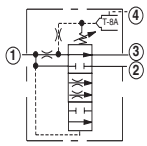	Ventable, Bypass / Restrictive, Fixed Orifice with Integral Pilot Control Cavity	78
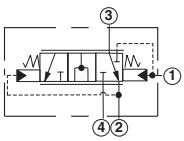	Bypass / Restrictive Modulating Element	79

BYPASS / RESTRICTIVE, FIXED ORIFICE

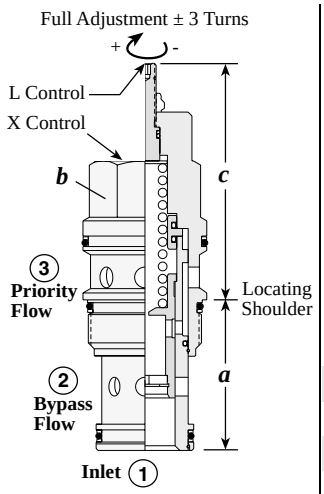

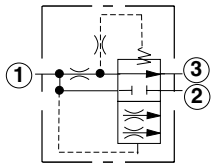

Capacity	Typical Cartridge Model Code	Cavity	Cartridge Dimensions a	b	c X	c L	c K	Installation Torque (Nm)
0,4-12 L/min.	**FRBA – XAN**	T - 163A	31	19,1	32	43	47	35/40
0,4-25 L/min.	**FRCA – XAN**	T - 11A	34,9	22,2	31	64	71	40/50
0,4-50 L/min.	**FRDA – XAN**	T - 2A	34,9	28,6	35	72	78	60/70
0,8-100 L/min.	**FREA – XAN**	T - 17A	46	31,8	46	84	91	200/215
0,8-200 L/min.	**FRFA – XAN**	T - 19A	63,5	41,3	60	100	107	465/500

Performance Curves

FRBA **FRCA** **FRDA** **FREA** **FRFA**

Typical Performance

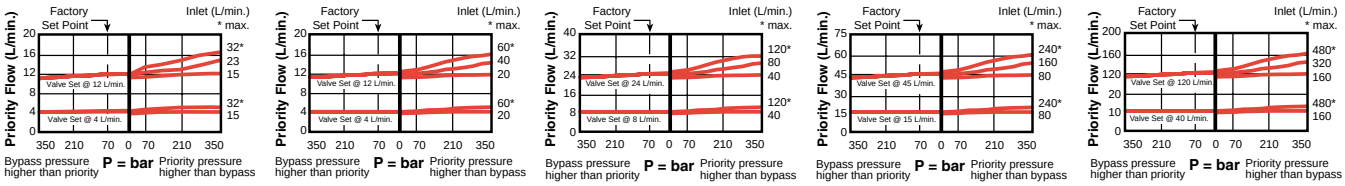

- Maximum operating pressure = 350 bar
- Customer must specify a flow rating. Factory set flow ratings are within +/- 10% of the requested setting.
- Pressure at the bypass port (port 2) may exceed pressure at the priority port (port 3).
- Maximum pressure at port 3 should be limited to 210 bar.
- Both priority and bypass flow are usable up to the system operating pressure.
- Bypass flow is not available until priority flow requirements are satisfied.
- Blocking priority flow will also block bypass flow.

OPTION ORDERING INFORMATION **Model Codes printed in Red are Preferred Versions and most readily available**

FR ✶ A – ✶ A ✶

Nominal Capacity	*Control***	*Adjustment Range*	*Seal*
B 0,4-12 L/min.	**X** Non-adjustable Factory set at customer specified flow	**A** Fixed Orifice	**N** Buna-N
C 0,4-25 L/min.		**Customer must specify flow**	**V** Viton
D 0,4-50 L/min.	**L** Tuning Adjustment ±25% of customer specified flow		
E 0,8-100 L/min.			
F 0,8-200 L/min.	**K** Handknob for **L** control		

Maximum Inlet Flow:
FRBA: 30 L/min.
FRCA: 60 L/min.
FRDA: 120 L/min.
FREA: 240 L/min.
FRFA: 480 L/min.

** *See page 162 for information on Control Options*

Priority Flow ranges:
FRBA: 0,4 - 12 L/min.
FRCA:0,4 - 25 L/min.
FRDA:0,4 - 50 L/min.
FREA: 0,8 - 100 L/min.
FRFA: 0,8 - 200 L/min.

Visit www.sunhydraulics.com for detailed and complete technical information on our full line of products.

VENTABLE, BYPASS / RESTRICTIVE, FIXED ORIFICE

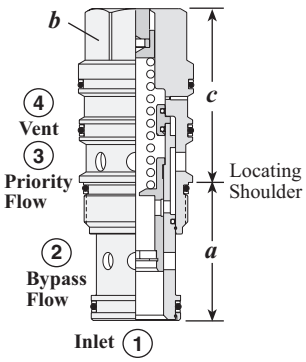

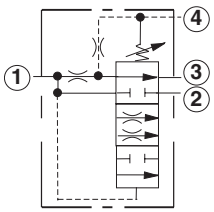

Capacity	*Typical Cartridge Model Code*	*Cavity*	*Cartridge Dimensions* *a*	*b*	*c* X	*c* L	*c* K	*Installation Torque (Nm)*
0,4-25 L/min.	**FVCA – XAN**	T - 21A	34,9	22,2	46	79	86	40/50
0,4-50 L/min.	**FVDA – XAN**	T - 22A	34,9	28,6	51	88	94	60/70
0,8-100 L/min.	**FVEA – XAN**	T - 23A	46	31,8	66	100	107	200/215
0,8-200 L/min.	**FVFA – XAN**	T - 24A	63,5	41,3	81	121	128	465/500

Performance Curves

FVCA **FVDA** **FVEA** **FVFA**

Typical Performance

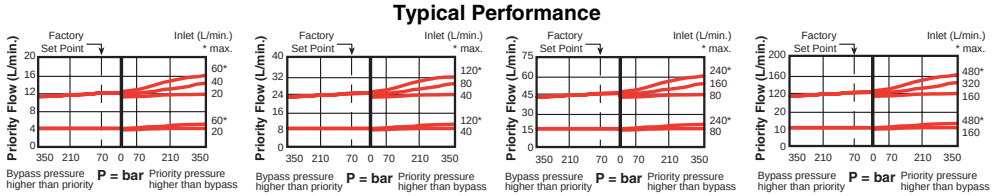

- Maximum operating pressure = 350 bar
- Nominal vent flow = 0,75 L/min.
- Pressure at the bypass port (port 2) may exceed pressure at the priority port (port 3).
- Maximum pressure at port 3 should be limited to 210 bar.
- Both priority and bypass flow are usable up to the system operating pressure.
- Bypass flow is not available until priority flow requirements are satisfied, except when the valve is vented. When port 4 (vent) is open, all flow diverts to port 2 if pressure at port 1 (inlet) is 10,5 bar or higher.
- Using a pressure control on port 4 will limit the pressure at the priority port (port 3). If pressure on the bypass port (port 2) exceeds the setting of the pressure control, priority flow will be shut off an all the flow will go out the bypass port.
- Blocking priority flow will also block bypass flow.

OPTION ORDERING INFORMATION

Model Codes printed in Red are Preferred Versions and most readily available

FV ✶ A – ✶ A ✶

Nominal Capacity		*Control***		*Adjustment Range*		*Seal*	
C	0,4-25 L/min.	**X**	Non-adjustable factory set at customer specified flow	**A**	Fixed Orifice	**N**	Buna-N
D	0,4-50 L/min.	**L**	Tuning Adjustment ±25% of customer specified flow		**Customer must specify flow**	**V**	Viton
E	0,8-100 L/min.						
F	0,8-200 L/min.	**K**	Handknob (includes L controls)				

Maximum Inlet Flow:
FVCA: 60 L/min.
FVDA: 120 L/min.
FVEA: 240 L/min.
FVFA: 480 L/min.

***See page 162 for information on Control Options*

Priority Flow ranges:
FVCA: 0,4 - 25 L/min.
FVDA: 0,4 - 50 L/min.
FVEA: 0,8 - 100 L/min.
FVFA: 0,8 - 200 L/min.

Visit www.sunhydraulics.com for detailed and complete technical information on our full line of products.

VENTABLE, BYPASS / RESTRICTIVE, FIXED ORIFICE WITH INTEGRAL PILOT CONTROL CAVITY

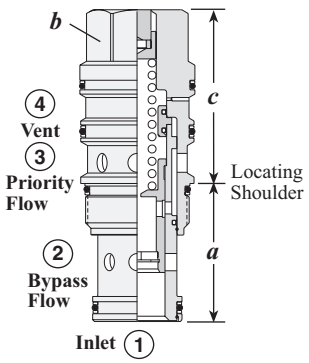

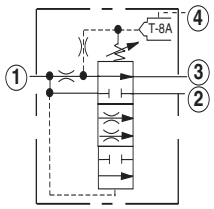

The -8 control option allows the pilot control valve to be incorporated directly into the end of the priority flow control cartridge via the T-8A cavity. These pilot control cartridges are sold separately and include electro-proportional, solenoid, air pilot, and hydraulic pilot operation. See Pilot Control Cartridges on page 121.

Capacity	*Typical Cartridge Model Code*	*Cavity*	*Cartridge Dimensions*			*Installation Torque (Nm)*
			a	*b*	*c* **8**	
0,4-25 L/min.	**FVCA – 8AN**	T - 21A	34,9	22,2	46	40/50
0,4-50 L/min.	**FVDA – 8AN**	T - 22A	34,9	28,6	46	40/50
0,8-100 L/min.	**FVEA – 8AN**	T - 23A	46	31,8	46	40/50
0,8-200 L/min.	**FVFA – 8AN**	T - 24A	63.5	41,3	46	40/50

Performance Curves

FVCA-8 **FVDA-8** **FVEA-8** **FVFA-8**

Typical Performance

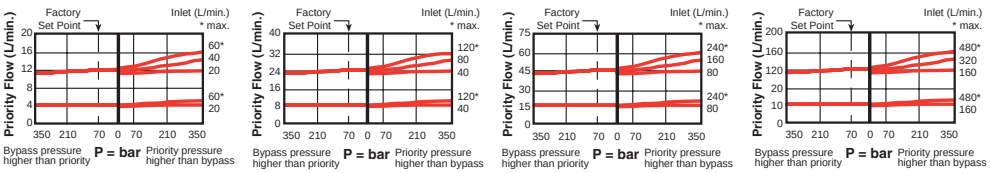

- Maximum operating pressure = 350 bar
- Nominal vent flow = 0,75 L/min.
- Pressure at the bypass port (port 2) may exceed pressure at the priority port (port 3).
- Maximum pressure at port 3 should be limited to 210 bar.
- Both priority and bypass flow are usable up to the system operating pressure.
- Bypass flow is not available until priority flow requirements are satisfied, except when the valve is vented. When port 4 (vent) is open, all flow diverts to port 2 if pressure at port 1 (inlet) is 10,5 bar or higher.
- Using a pressure control on port 4 will limit the pressure at the priority port (port 3). If pressure on the bypass port (port 2) exceeds the setting of the pressure control, priority flow will be shut off and all the flow will go out the bypass port.
- Blocking priority flow will also block bypass flow.
- The main stage valve should first be installed to the correct torque value followed by the T-8A pilot control section into the main stage valve to its required torque value.

OPTION ORDERING INFORMATION **Model Codes printed in Red are Preferred Versions and most readily available**

FV ✶ A – 8 A ✶

Nominal Capacity	*Control***	*Adjustment Range*	*Seal*
C 0,4-25 L/min.	**8** T-8A cavity in hex body for pilot operation (Pilot valve to be ordered separately)	**A** Fixed Orifice	**N** Buna-N
D 0,4-50 L/min.		**Customer must specify flow**	**V** Viton
E 0,8-100 L/min.			
F 0,8-200 L/min.			

Maximum Inlet Flow:
FVCA: 60 L/min.
FVDA: 120 L/min.
FVEA: 240 L/min.
FVFA: 480 L/min.

Priority Flow ranges:
FVCA: 0,4 - 25 L/min.
FVDA: 0,4 - 50 L/min.
FVEA: 0,8 - 100 L/min.
FVFA: 0,8 - 200 L/min.

***See page 162 for information on Control Options*

Visit www.sunhydraulics.com for detailed and complete technical information on our full line of products.

BYPASS / RESTRICTIVE MODULATING ELEMENT

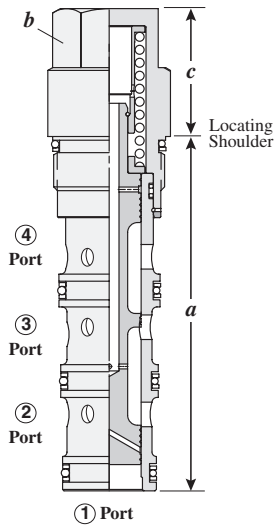

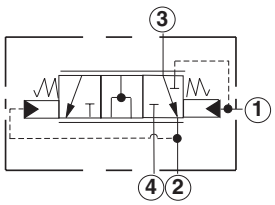

Capacity	Typical Cartridge Model Code	Cavity	Cartridge Dimensions a	b	c X	Installation Torque (Nm)
60 L/min.	**LHDA – XFN**	T - 31A	84,8	22,2	30	40/50
120 L/min.	**LHFA – XFN**	T - 32A	92,2	28,6	34	60/70
240 L/min.	**LHHA – XFN**	T - 33A	114,4	31,8	42	200/215
480 L/min.	**LHJA – XFN**	T - 34A	139,7	41,3	51	465/500

- Maximum operating pressure = 350 bar
- Bypass flow is not available until priority flow requirements are satisfied.
- Bypass pressure at port 4 can be higher than pressure at control port 2.
- Priority flow can be turned on or off with a pilot sized solenoid valve on port 1.

OPTION ORDERING INFORMATION

Model Codes printed in Red are Preferred Versions and most readily available

LH ✶ A – X ✶ ✶

Maximum Inlet Flow	*Control***	*Adjustment Range*	*Seal*
D 60 L/min.	**X** Non-adjustable	**E** 5 - 7 bar	**N** Buna-N
F 120 L/min.		**F** 7 - 9,5 bar	**V** Viton
H 240 L/min.			
J 480 L/min.			

*** See page 162 for information on Control Options*

Visit www.sunhydraulics.com for detailed and complete technical information on our full line of products.

NOTES

Flow Divider / Combiner Cartridge Valves

	Cartridge Type	*Page*
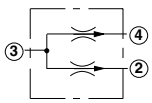	Divider	82
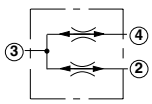	Divider / Combiner, Closed Centre	83
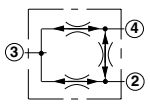	Synchronizing Divider / Combiner	84
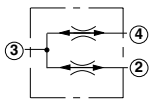	High Capacity Divider / Combiner, Closed Center	85

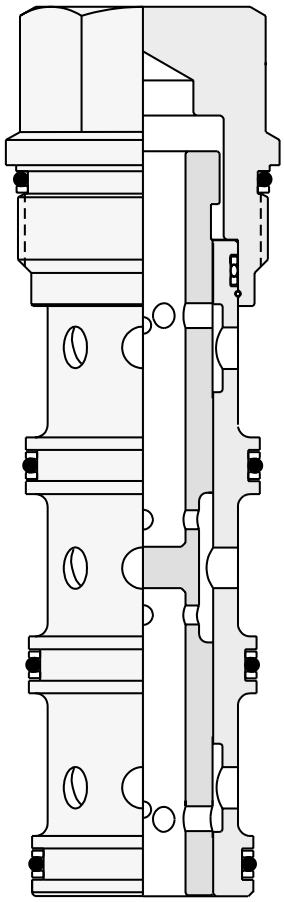

DIVIDER

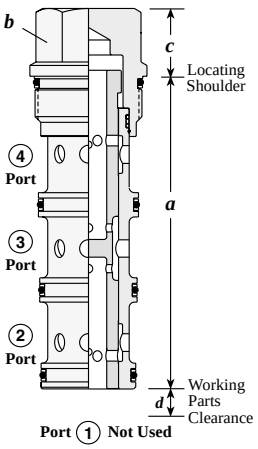

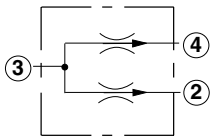

Capacity Min/Max	*Typical Cartridge Model Code*	*Cavity*	*Cartridge Dimensions* a	b	c	d	*Installation Torque (Nm)*
2,5-12 L/min.	**FSBD – XAN**	T - 31A	84,8	22,2	19	17	40/50
6-30 L/min.	**FSCD – XAN**	T - 31A	84,8	22,2	19	17	40/50
12-60 L/min.	**FSDD – XAN**	T - 32A	92,2	28,6	18	20	60/70
23-120 L/min.	**FSED – XAN**	T - 33A	114,4	31,8	25	26	200/215
45-240 L/min.	**FSFD – XAN**	T - 34A	139,7	41,3	31	30	465/500

Performance Curves

Operating Characteristics

FSBD-XAN

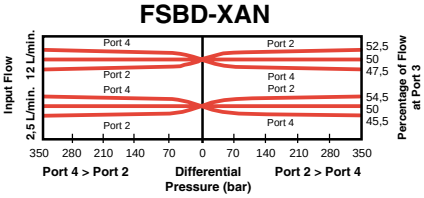

FSCD-XAN

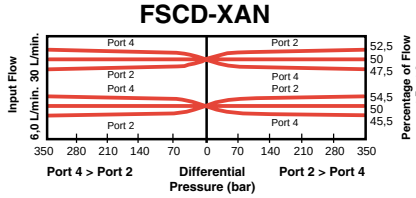

FSDD-XAN

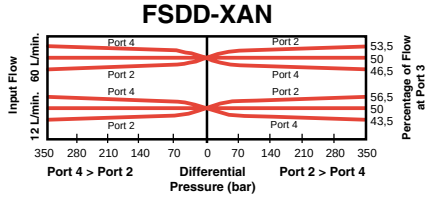

FSED-XAN

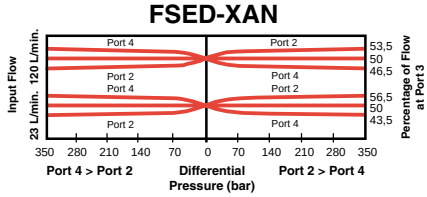

FSFD-XAN

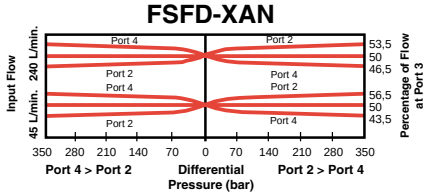

- Maximum operating pressure = 350 bar
- This valve is a divider only; any attempt to flow backwards through the valve is not advised.
- Divisional accuracy at maximum rated input flow = FSBD: ±2.5%, FSCD, FSDD, FSED, FSFD: ±3.5%
- Divisional accuracy at minimum rated input flow = FSBD: ±4.5%, FSCD, FSDD, FSED, FSFD: ±6.5%
- Pressure drop at maximum input flow = 18 bar
- Pressure drop at minimum input flow = 0,7 bar
- Below the minimum flow rating there is not enough flow for the valve to modulate. It is effectively a tee. If flow starts at zero and rises, there will be no dividing control until the flow reaches the minimum rating.

OPTION ORDERING INFORMATION

Model Codes printed in Red are Preferred Versions and most readily available

FS ★ D – X ★ ★

Nominal Capacity	*Control*	*Flow Proportion*	*Seal*
B 2,5-12 L/min.	**X** Non-adjustable	**A** 50/50 Flow Split	**N** Buna-N
C 6-30 L/min.		**B***40/60 Flow Split	**V** Viton
D 12-60 L/min.		**C***33/67 Flow Split	
E 23-120 L/min.			
F 45-240 L/min.			

* *Port 4 is always high percentage flow.*

Reverse Flow Path is unpredictable
Divisional Accuracy =
FSCD, FSDD, FSED and FSFD:
± 6.5 % at minimum input flow
± 3.5 % at maximum input flow
FSBD:
± 4.5 % at minimum input flow
± 2.5 % at maximum input flow

Visit www.sunhydraulics.com for detailed and complete technical information on our full line of products.

DIVIDER / COMBINER, CLOSED CENTER

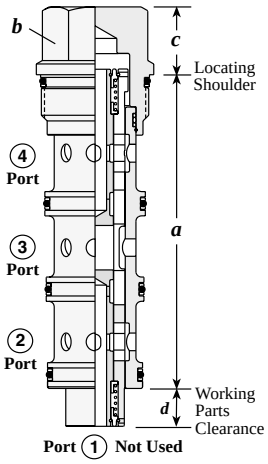

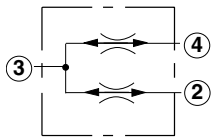

Note: Closed center valves have spring centered internal spools that provide blocked flow paths when centered. Centering occurs when the Port 3 flow is also blocked. This internal blocking isolates Port 2 and 4 from cross flow.

Capacity Min/Max	*Typical Cartridge Model Code*	*Cavity*	*Cartridge Dimensions* a	b	c	d	*Installation Torque (Nm)*
2,5-12 L/min.	**FSBA – XAN**	T - 31A	84,8	22,2	19	17	40/50
6-30 L/min.	**FSCA – XAN**	T - 31A	84,8	22,2	19	17	40/50
12-60 L/min.	**FSDA – XAN**	T - 32A	92,2	28,6	18	20	60/70
23-120 L/min.	**FSEA – XAN**	T - 33A	114,4	31,8	25	26	200/215
45-240 L/min.	**FSFA – XAN**	T - 34A	139,7	41,3	31	30	465/500

Performance Curves

Operating Characteristics

FSBA-XAN

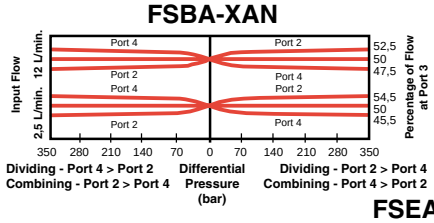

FSCA-XAN

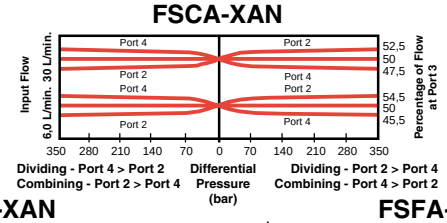

FSDA-XAN

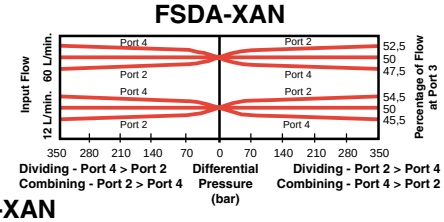

FSEA-XAN

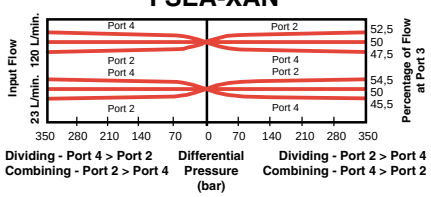

FSFA-XAN

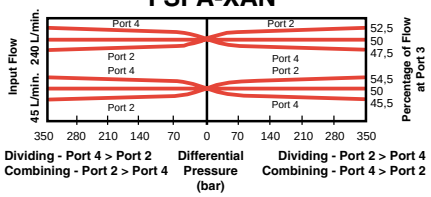

- Maximum operating pressure = 350 bar
- Divisional accuracy at rated maximum input flow = 50% ±2.5%
- Divisional accuracy at rated minimum input flow = 50% ±4.5%
- Pressure drop at maximum input flow = 24 bar
- Pressure drop at minimum input flow = 1,7 bar
- Below the minimum flow rating there is not enough flow for the valve to modulate. It is effectively a tee. If flow starts at zero and rises, there will be no dividing or combining control until the flow reaches the minimum rating.
- Divisional and combining accuracy are equal.

OPTION ORDERING INFORMATION

Model Codes printed in Red are Preferred Versions and most readily available

FS ★ A – X A ★

Nominal Capacity		*Control*		*Flow Proportion*		*Seal*	
B	2,5-12 L/min.	**X**	Non-adjustable	**A**	50/50 Flow Split	**N**	Buna-N
C	6-30 L/min.					**V**	Viton
D	12-60 L/min.						
E	23-120 L/min.						
F	45-240 L/min.						

Divisional Accuracy (Combining and Dividing) =
± 4.5 % at minimum input flow
± 2.5 % at maximum input flow

Visit wwwsunhydraulics.com for detailed and complete technical information on our full line of products.

SYNCHRONIZING DIVIDER / COMBINER

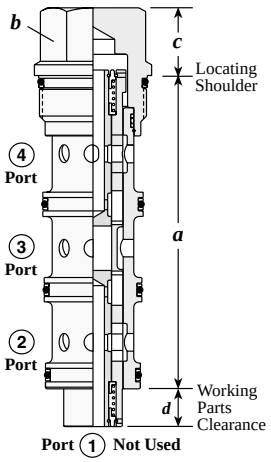

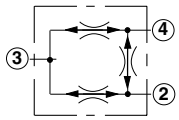

Capacity Min/Max	*Typical Cartridge Model Code*	*Cavity*	*Cartridge Dimensions*				*Installation Torque (Nm)*
			a	*b*	*c*	*d*	
2,5-12 L/min.	**FSBS – XAN**	T - 31A	84,8	22,2	19	17	40/50
6-30 L/min.	**FSCS – XAN**	T - 31A	84,8	22,2	19	17	40/50
12-60 L/min.	**FSDS – XAN**	T - 32A	92,2	28,6	18	20	60/70
23-120 L/min.	**FSES – XAN**	T - 33A	114,4	31,8	25	26	200/215
45-240 L/min.	**FSFS – XAN**	T - 34A	139,7	41,3	31	30	465/500

Performance Curves

Operating Characteristics

FSBS-XAN

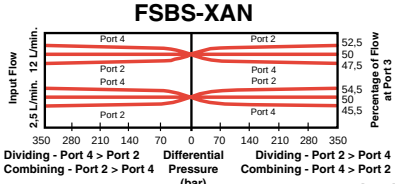

FSCS-XAN

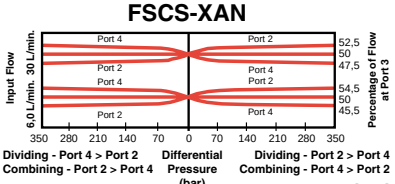

FSDS-XAN

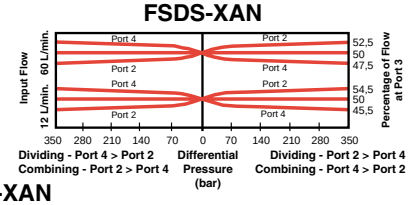

FSES-XAN

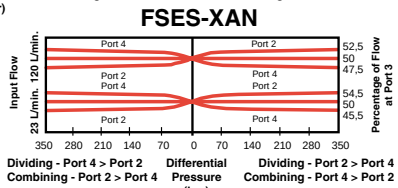

FSFS-XAN

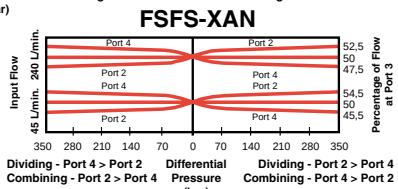

- Maximum operating pressure = 350 bar
- Divisional accuracy at rated maximum input flow = 50% ±2.5%
- Divisional accuracy at rated minimum input flow = 50% ±4.5%
- Pressure drop at maximum input flow = 24 bar
- Pressure drop at minimum input flow = 1,7 bar
- Below the minimum flow rating there is not enough flow for the valve to modulate. It is effectively a tee. If flow starts at zero and rises, there will be no dividing or combining control until the flow reaches the minimum rating.
- The synchronization feature provides bi-directional static error correction.
- Divisional and combining accuracy are equal.

OPTION ORDERING INFORMATION

Model Codes printed in Red are Preferred Versions and most readily available

FS ✶ S – X A ✶

Nominal Capacity	*Control*	*Flow Proportion*	*Seal*
B 2,5-12 L/min.	**X** Non-adjustable	**A** 50/50 Flow Split	**N** Buna-N
C 6-30 L/min.			**V** Viton
D 12-60 L/min.			
E 23-120 L/min.			
F 45-240 L/min.			

Divisional Accuracy (Combining and Dividing) =
± 4.5 % at minimum input flow
± 2.5 % at maximum input flow
Synchronizing Flow per Leg:
FSBS: 0,6 - 1 L/min.
FSCS: 0,75 - 2 L/min.
FSDS: 1,2 - 2,5 L/min.
FSES: 3 - 6 L/min.
FSFS: 9 - 13 L/min.

Visit www.sunhydraulics.com for detailed and complete technical information on our full line of products.

HIGH CAPACITY DIVIDER / COMBINER, CLOSED CENTER

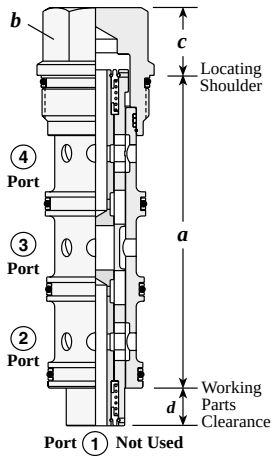

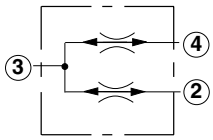

Note: Closed center valves have spring centered internal spools that provide blocked flow paths when centered. Centering occurs when the Port 3 flow is also blocked. This internal blocking isolates Port 2 and 4 from cross flow.

Capacity Min/Max	*Typical Cartridge Model Code*	*Cavity*	*Cartridge Dimensions* a	b	c	d	*Installation Torque (Nm)*
8-40 L/min.	**FSCH – XAN**	T - 31A	84,8	22,2	19	17	40/50
15-80 L/min.	**FSDH – XAN**	T - 32A	92,2	28,6	18	20	60/70
32-160 L/min.	**FSEH – XAN**	T - 33A	114,4	31,8	25	26	200/215
60-320 L/min.	**FSFH – XAN**	T - 34A	139,7	41,3	31	30	465/500

Performance Curves

Constant Command - Varying Flow

FSCH-XAN

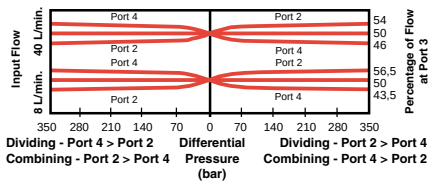

FSDH-XAN

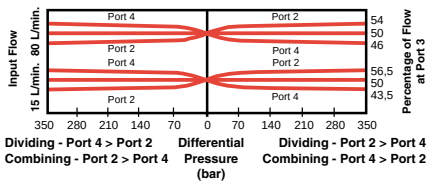

FSEH-XAN

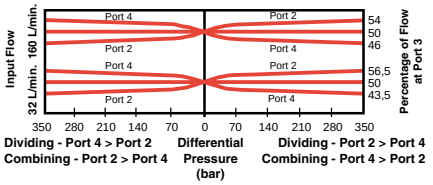

FSFH-XAN

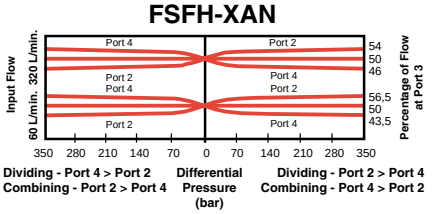

- Maximum operating pressure = 350 bar
- Divisional accuracy at rated maximum input flow = 50% ±4%
- Divisional accuracy at rated minimum input flow = 50% ±6.5%
- Pressure drop at maximum input flow = 24 bar
- Pressure drop at minimum input flow = 1,7 bar
- Below the minimum flow rating there is not enough flow for the valve to modulate. It is effectively a tee. If flow starts at zero and rises, there will be no dividing or combining control until the flow reaches the minimum rating.
- Divisional and combining accuracy are equal.

OPTION ORDERING INFORMATION **Model Codes printed in Red are Preferred Versions and most readily available**

FS ★ H – X A ★

Nominal Capacity	*Control*	*Flow Proportion*	*Seal*
C 8-40 L/min.	**X** Non-adjustable	**A** 50/50 Flow Split	**N** Buna-N
D 15-80 L/min.			**V** Viton
E 32-160 L/min.			
F 60-320 L/min.			

Divisional Accuracy (Combining and Dividing) =
± 6.5 % at minimum input flow
± 4.0 % at maximum input flow

Visit www.sunhydraulics.com for detailed and complete technical information on our full line of products.

NOTES

Logic Elements

	Cartridge Type	*Page*
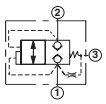	Unbalanced Poppet, Pilot-to-Close Switching Element	88
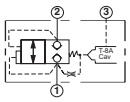	Unbalanced Poppet, Pilot-to-Close Switching Element with Integral Pilot Control Cavity	89
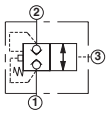	Unbalanced Poppet, Pilot-to-Open Switching Element	90
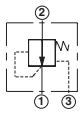	Normally Open Modulating Element	91
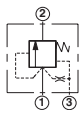	Normally Closed Modulating Element	92
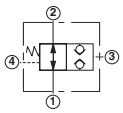	Normally Open, Direct Operated	93
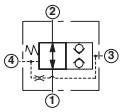	Normally Open, Vent-to-Operate	94
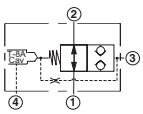	Normally Open, Vent-to-Operate with Integral Pilot Control Cavity	95
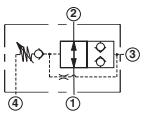	Normally Open, Pressure Adjustable	96
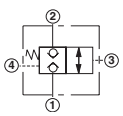	Normally Closed, Direct Operated	97
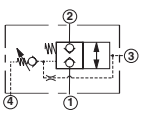	Normally Closed, Pressure Adjustable	98
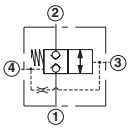	Normally Closed, Vent-to-Operate	99
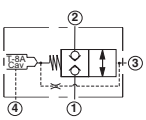	Normally Closed, Vent-to-Operate with Integral Pilot Control Cavity	100

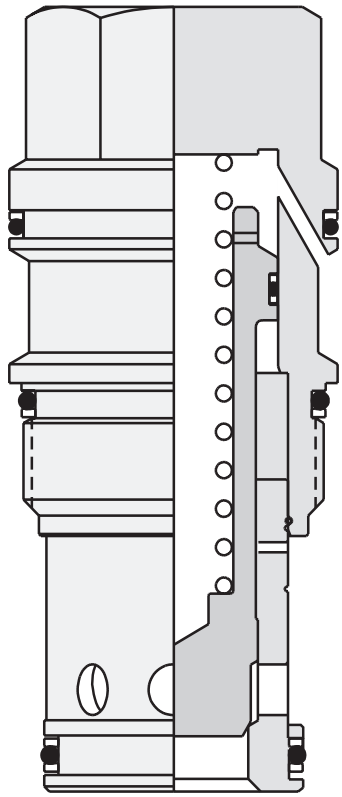

UNBALANCED POPPET, PILOT-TO-CLOSE SWITCHING ELEMENT

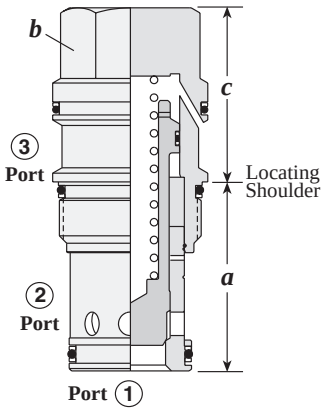

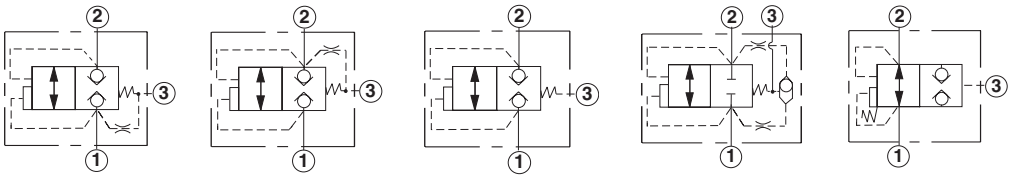

Nominal Capacity	*Typical Cartridge Model Code*	*Cavity*	*Cartridge Dimensions* a	b	c X	c E	*Installation Torque (Nm)*
80 L/min.	**LODC – XDN**	T - 11A	34,9	22,2	28	28	40/50
160 L/min.	**LOFC – XDN**	T - 2A	34,9	28,6	35	35	60/70
320 L/min.	**LOHC – XDN**	T - 17A	46	31,8	46	46	200/215
640 L/min.	**LOJC – XDN**	T - 19A	63,5	41,3	59	59	465/500

Performance Curves

LOD* **LOF*** **LOH*** **LOJ***

Full Open Pressure Drop

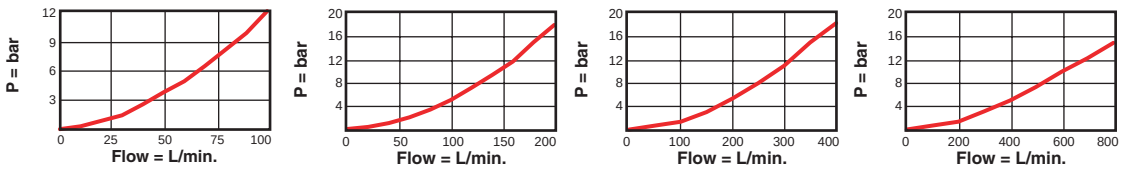

- Maximum operating pressure = 350 bar
- Area ratio: A3 to A1 = 1.8:1
- Area ratio: A3 to A2 = 2.25:1
- Control orifice diameter = LODA, LODB, LODD, LOFA, LOFB, LOFD: 0,53 mm, LOHA, LOHB, LOHD: 0,8 mm, LOJA, LOJB, LOJD: 0,9 mm.
- Pilot volume for complete shift = LOD*: 0,6 c.c., LOF*: 1,1 c.c., LOH*: 4,1 c.c., LOJ*: 6,9 c.c.
- These valves are pressure responsive at all three ports, therefore it is essential to consider all aspects of system operation through a complete cycle. Pressure changes at any one port may cause a valve to switch from a closed to an open position, or vice versa. All possible pressure changes in the complete circuit must be considered to assure a safe, functional system design.

OPTION ORDERING INFORMATION

Model Codes printed in Red are Preferred Versions and most readily available

LO ★ ★ – ★ ★ ★

Nominal Capacity

- **D** 80 L/min.
- **F** 160 L/min.
- **H** 320 L/min.
- **J** 640 L/min.

Version

- **A** Spring biased closed Port 1 pilot source
- **B** Spring biased closed Port 2 pilot source
- **C** Spring biased closed Port 3 pilot source
- **D** Spring biased closed higher of Ports 1or 2 pilot source
- **O** Spring biased open Port 3 pilot source

Control**

- **X** Non-adjustable

Available in B and C Versions Only

- **E** SAE-4 Port in Hex Body, Port 3 blocked

Available in D and F Capacities Only

- **L** Stroke Adjustment

Cracking Pressure A, B, C, D Versions

- **D** 3,5 bar at Port 1 (2 bar to close at Port 3 for **O** Version)

Seal

- **N** Buna-N
- **V** Viton

** *See page 162 for information on Control Options*

Visit www.sunhydraulics.com for detailed and complete technical information on our full line of products.

UNBALANCED POPPET, PILOT-TO-CLOSE SWITCHING ELEMENT WITH INTEGRAL PILOT CONTROL CAVITY

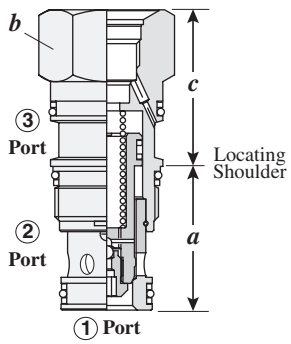

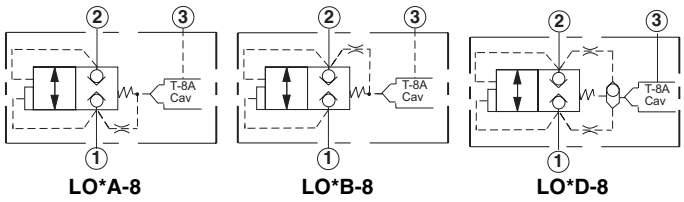

The -8 control option allows a pilot control valve to be incorporated directly into the end of the cartridge via the T-8A cavity. These pilot control cartridges are sold separately and include solenoid and air pilot operation. See Pilot Control Cartridges on page 121.

Nominal Capacity	*Typical Cartridge Model Code*	*Cavity*	*Cartridge Dimensions*			*Installation Torque (Nm)*
			a	*b*	*c*	
80 L/min.	**LODA – 8DN**	T - 11A	34,9	22,2	28	40/50
160 L/min.	**LOFA – 8DN**	T - 2A	34,9	28,6	35	60/70
320 L/min.	**LOHA – 8DN**	T - 17A	46	31,8	46	200/215
640 L/min.	**LOJA – 8DN**	T - 19A	63,5	41,3	59	465/500

Performance Curves

LOD*-8 **LOF*-8** **LOH*-8** **LOJ*-8**

Full Open Pressure Drop

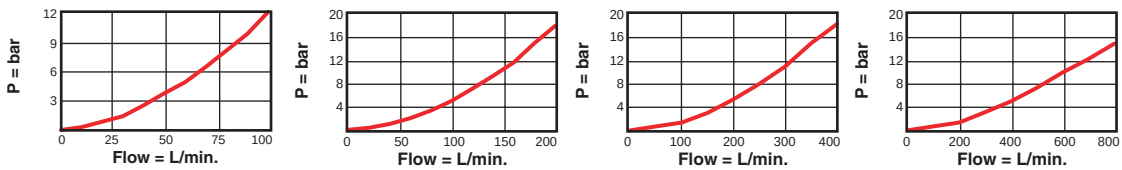

- Maximum operating pressure = 350 bar
- Area ratio: A3 to A1 = 1.8:1
- Area ratio: A3 to A2 = 2.25:1
- Control orifice diameter = LOD*-8, LOD*-8, LOF*-8, LOF*-8: 0,53 mm, LOH*-8, LOH*-8: 0,8 mm, LOJ*-8, LOJ*-8: 0,9 mm.
- These valves are pressure responsive at all three ports, therefore it is essential to consider all aspects of system operation through a complete cycle. Pressure changes at any one port may cause a valve to switch from a closed to an open position, or vice versa. All possible pressure changes in the complete circuit must be considered to assure a safe, functional system design.
- With the -8 control option, the main stage valve should first be installed to the correct torque value. The T-8A pilot control valve should then be installed into the main stage valve to its required torque value.

OPTION ORDERING INFORMATION

Model Codes printed in Red are Preferred Versions and most readily available

LO ✶ ✶ – 8 ✶ ✶

Nominal Capacity

- **D** 80 L/min.
- **F** 160 L/min.
- **H** 320 L/min.
- **J** 640 L/min.

Version

- **A** Spring biased closed Port 1 pilot source
- **B** Spring biased closed Port 2 pilot source
- **D** Spring biased closed higher of Ports 1or 2 pilot source

Control**

- **8** T-8A Cavity in hex body for pilot operation (Pilot valve to be ordered separately)

Cracking Pressure A, B, D Versions

- **D** 3,5 bar at Port 1

Seal

- **N** Buna-N
- **V** Viton

*** See page 162 for information on Control Options*

Visit www.sunhydraulics.com for detailed and complete technical information on our full line of products.

UNBALANCED POPPET, PILOT-TO-OPEN SWITCHING ELEMENT

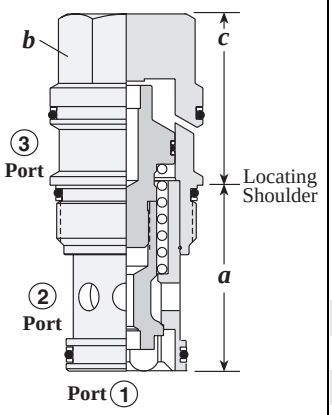

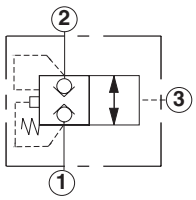

Nominal Capacity	*Typical Cartridge Model Code*	*Cavity*	*Cartridge Dimensions* a	b	c	*Installation Torque (Nm)*
60 L/min.	**LKDC – XDN**	T - 11A	34,9	22,2	28	40/50
120 L/min.	**LKFC – XDN**	T - 2A	34,9	28,6	35	60/70
240 L/min.	**LKHC – XDN**	T - 17A	46	31,8	46	200/215
480 L/min.	**LKJC – XDN**	T - 19A	63,5	41,3	59	465/500

Performance Curves

LKDC **LKFC** **LKHC** **LKJC**

Full Open Pressure Drop

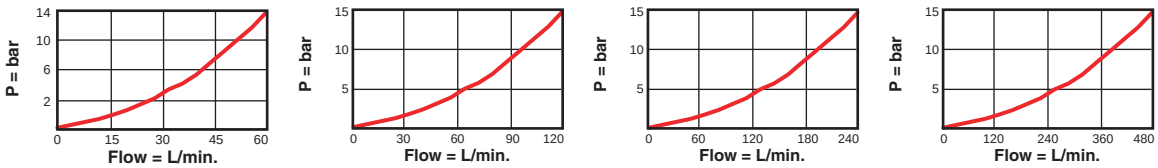

- Maximum operating pressure = 350 bar
- Area ratio: A3 to A1 = 1.8:1
- Area ratio: A3 to A2 = 2.25:1
- Control orifice diameter = LKDC: 0,8 mm, LKFC: 0,9 mm, LKHC: 1,6 mm, LKJC: 2,4 mm
- Pilot volume for complete shift = LKDC: 0,33 c.c., LKFC: 1,0 c.c., LKHC: 2,5 c.c., LKJC: 4,9 c.c.
- These valves are pressure responsive at all three ports, therefore it is essential to consider all aspects of system operation through a complete cycle. Pressure changes at any one port may cause a valve to switch from a closed to an open position, or vice versa. All possible pressure changes in the complete circuit must be considered to assure a safe, functional system design.

OPTION ORDERING INFORMATION

Model Codes printed in Red are Preferred Versions and most readily available

LK ★ ★ – ★ ★ ★

Nominal Capacity

D 60 L/min.
F 120 L/min.
H 240 L/min.
J 480 L/min.

Version

C Port 3 pilot source

Control**

X Non-adjustable

Available in D and F Capacities Only

L Manual Release

Cracking Pressure

D 3,5 bar at Port 3

Seal

N Buna-N
V Viton

** *See page 162 for information on Control Options*

Visit www.sunhydraulics.com for detailed and complete technical information on our full line of products.

NORMALLY OPEN MODULATING ELEMENT

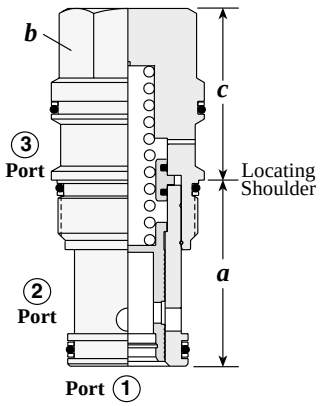

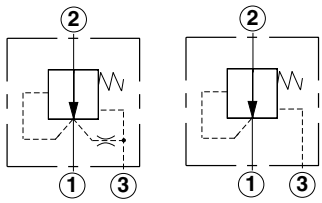

LP*A **LP*C**

Nominal Capacity	*Typical Cartridge Model Code*	*Cavity*	*Cartridge Dimensions* a	b	c X	c L	*Installation Torque (Nm)*
30 L/min.	**LPBC – XHN**	T - 163A	31	19,1	32	65	35/40
60 L/min.	**LPDC – XHN**	T - 11A	34,9	22,2	31	64	40/50
120 L/min.	**LPFC – XHN**	T - 2A	34,9	28,6	35	72	60/70
240 L/min.	**LPHC – XHN**	T - 17A	46	31,8	46	84	200/215
480 L/min.	**LPJC – XHN**	T - 19A	63,5	41,3	59	100	465/500

Performance Curves

LPBC **LPDC** **LPFC** **LPHC** **LPJC**

Capacity as a Restrictive Compensator

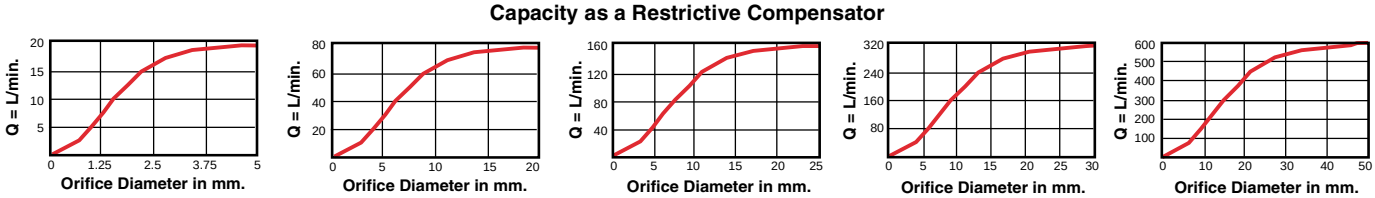

- Maximum operating pressure = 350 bar
- Maximum leakage at 150 SUS, port 3 = 16,4 cc/min.
- Control orifice diameter = LPB*, LPD*, LPF*: 0,4 mm, LPH*, LPJ*: 0,53 mm.

OPTION ORDERING INFORMATION

Model Codes printed in Red are Preferred Versions and most readily available

LP ★ ★ – ★ ★ ★

Nominal Capacity

- **B** 30 L/min.
- **D** 60 L/min.
- **F** 120 L/min.
- **H** 240 L/min.
- **J** 480 L/min.

Version

- **A** Internal pilot Port 1 to Port 3 (mainstage reducing element)
- **C** External pilot (restrictive compensator)

Control**

- **X** Non-adjustable

Available in D Adjustment Range only

- **L** Tuning Adjustment ± 25% of customer specified flow

Control Pressure

- **D** 3,5 bar
- **F** 7,0 bar
- **G*** 10,0 bar
- **H** 14,0 bar

Seal

- **N** Buna-N
- **V** Viton

** *See page 162 for information on Control Options*

* *G Adjustment Range not available in LPBA, LPBC.*

Visit www.sunhydraulics.com for detailed and complete technical information on our full line of products.

NORMALLY CLOSED MODULATING ELEMENT

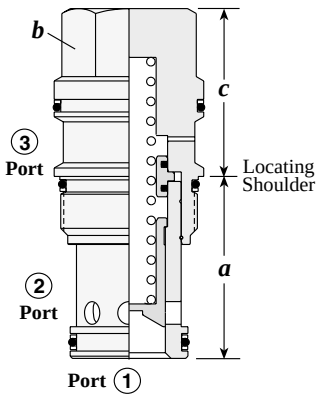

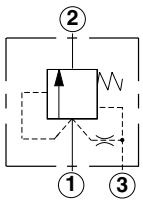

LR*A

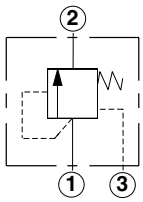

LR*C

Nominal Capacity	*Typical Cartridge Model Code*	*Cavity*	*Cartridge Dimensions*				*Installation Torque (Nm)*
			a	*b*	*c*		
					X	**L**	
30 L/min.	**LRBC – XHN**	T - 163A	31	19,1	32	65	35/40
60 L/min.	**LRDC – XHN**	T - 11A	34,9	22,2	31	64	40/50
120 L/min.	**LRFC – XHN**	T - 2A	34,9	28,6	35	72	60/70
240 L/min.	**LRHC – XHN**	T - 17A	46	31,8	46	84	200/215
480 L/min.	**LRJC – XHN**	T - 19A	63,5	41,3	59	100	465/500

- Maximum operating pressure = 350 bar
- Control orifice diameter = LRB*, LRD*, LRF*: 0,4 mm, LRH*, LRJ*: 0,53 mm.

OPTION ORDERING INFORMATION

Model Codes printed in Red are Preferred Versions and most readily available

LR ★ ★ – ★ ★ ★

Nominal Capacity

- **B** 30 L/min.
- **D** 60 L/min.
- **F** 120 L/min.
- **H** 240 L/min.
- **J** 480 L/min.

Version

- **A** Internal pilot Port 1 to Port 3 (mainstage relief element)
- **C** External pilot (bypass compensator)

Control**

- **X** Non-adjustable

Available in D Adjustment Range only

- **L** Tuning Adjustment ± 25% of customer specified flow

Control Pressure

- **D** 3,5 bar
- **F** 7,0 bar
- **G*** 10,0 bar
- **H** 14,0 bar

Seal

- **N** Buna-N
- **V** Viton

** *See page 162 for information on Control Options*

* *G Adjustment Range not available in LRBA, LRBC.*

Visit www.sunhydraulics.com for detailed and complete technical information on our full line of products.

NORMALLY OPEN, DIRECT OPERATED

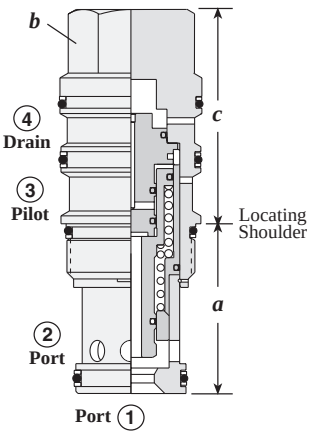

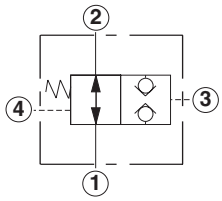

Nominal Capacity	Typical Cartridge Model Code	Cavity	Cartridge Dimensions a	b	c	Installation Torque (Nm)
60 L/min.	**DODS – XHN**	T - 21A	34,9	22,2	46	40/50
120 L/min.	**DOFS – XHN**	T - 22A	34,9	28,6	51	60/70
240 L/min.	**DOHS – XHN**	T - 23A	46	31,8	63	200/215
480 L/min.	**DOJS – XHN**	T - 24A	63,5	41,3	81	465/500

Performance Curves

DODS **DOFS** **DOHS** **DOJS**

Fully Open Pressure Differential vs. Flow

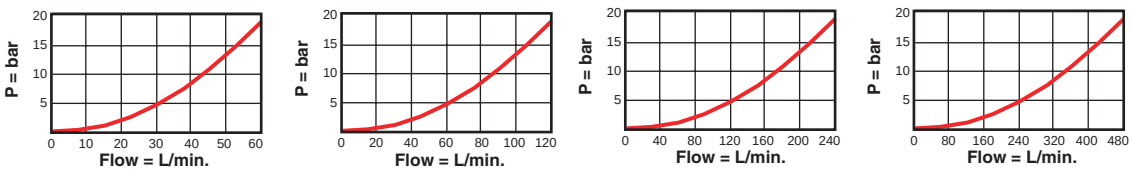

- Maximum operating pressure = 350 bar (Port 1 and Port 2)
- Minimum pilot pressure to shift valve = DODS: 30 bar, DOFS, DOHS, DOJS: 20 bar,
- Maximum valve leakage, Port 1 to Port 2 or Port 2 to Port 1 = 0,4 cc/min.
- Pilot volume for complete shift = DODS: 0,16 c.c., DOFS: 0,33 c.c., DOHS: 0,82 c.c., DOJS: 2,8 c.c.
- Valve will open when the pilot pressure falls below 10 bar.
- Any back pressure at the drain port is directly additive to the required pilot pressure for reliable operation.

OPTION ORDERING INFORMATION

Model Codes printed in Red are Preferred Versions and most readily available

DO ✶ S – ✶ H ✶

Nominal Capacity	*Control***	*Control Pressure*	*Seal*
D 60 L/min.	**X** Non-adjustable	**H** 14,0 bar	**N** Buna-N
F 120 L/min.			**V** Viton
H 240 L/min.			
J 480 L/min.			

** *See page 162 for information on Control Options*

Visit www.sunhydraulics.com for detailed and complete technical information on our full line of products.

NORMALLY OPEN, VENT-TO-OPERATE

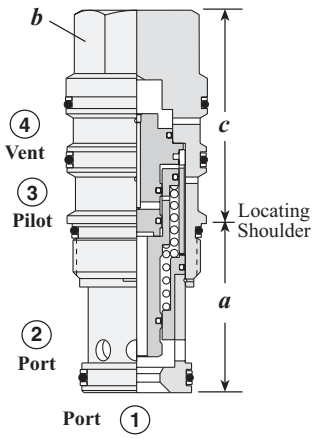

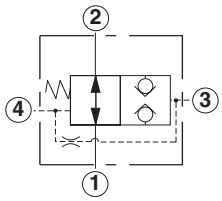

Nominal Capacity	Typical Cartridge Model Code	Cavity	Cartridge Dimensions a	b	c	Installation Torque (Nm)
60 L/min.	**DODR – XHN**	T - 21A	34,9	22,2	46	40/50
120 L/min.	**DOFR – XHN**	T - 22A	34,9	28,6	51	60/70
240 L/min.	**DOHR – XHN**	T - 23A	46	31,8	63	200/215
480 L/min.	**DOJR – XHN**	T - 24A	63,5	41,3	81	465/500

Performance Curves

DODR **DOFR** **DOHR** **DOJR**

Fully Open Pressure Differential vs. Flow

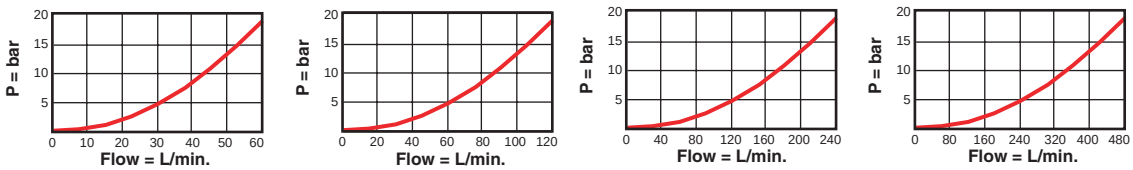

- Maximum operating pressure = 350 bar
- Minimum pilot pressure to shift valve with Port 4 vented to tank = DODR: 30 bar, DOFR, DOHR, DOJR: 20 bar
- Maximum valve leakage, Port 1 to Port 2 or Port 2 to Port 1 = 0,4 cc/min.
- Control pilot flow = DODR, DOFR: 0,4 L/min., DOHR, DOJR: 0,6 L/min.
- Valve will open when the pilot pressure falls below 10 bar or with Port 4 blocked.
- Port 4 may be externally connected to a pilot switching valve. The pilot valve should have a leakage rate of less than 10 drops/min. and be able to satisfy the pilot flow requirements. Sun model DAAA-*** solenoid pilot valve is ideal for this application.

OPTION ORDERING INFORMATION

Model Codes printed in Red are Preferred Versions and most readily available

DO ✶ R – ✶ ✶ ✶

Nominal Capacity		*Control***		*Control Pressure*		*Seal*	
D	60 L/min.	**X**	Non-adjustable	**H**	14,0 bar	**N**	Buna-N
F	120 L/min.					**V**	Viton
H	240 L/min.						
J	480 L/min.						

** *See page 162 for information on Control Options*

Visit www.sunhydraulics.com for detailed and complete technical information on our full line of products.

NORMALLY OPEN, VENT-TO-OPERATE WITH INTEGRAL PILOT CONTROL CAVITY

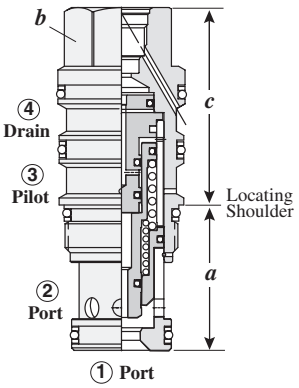

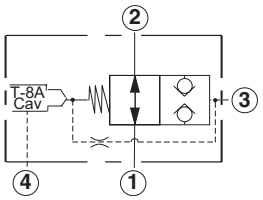

The -8 control option allows a pilot control valve to be incorporated directly into the end of the cartridge via the T-8A cavity. These pilot control cartridges are sold separately and include solenoid, air pilot, and hydraulic pilot operation. See Pilot Control Cartridges on page 121.

Nominal Capacity	*Typical Cartridge Model Code*	*Cavity*	*Cartridge Dimensions*			*Installation Torque (Nm)*
			a	*b*	*c*	
60 L/min.	**DODR – 8HN**	T - 21A	34,9	22,2	46	40/50
120 L/min.	**DOFR – 8HN**	T - 22A	34,9	28,6	51	60/70
240 L/min.	**DOHR – 8HN**	T - 23A	46	31,8	63	200/215
480 L/min.	**DOJR – 8HN**	T - 24A	63,5	41,3	81	465/500

Performance Curves

DODR-8 **DOFR-8** **DOHR-8** **DOJR-8**

Fully Open Pressure Differential vs. Flow

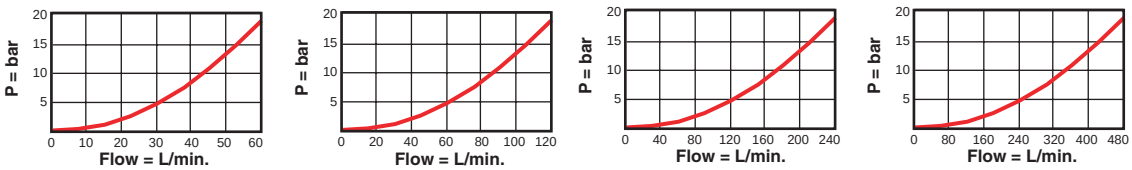

- Maximum operating pressure = 350 bar
- Minimum pilot pressure to shift valve = DODR: 30 bar, DOFR, DOHR, DOJR: 20 bar,
- Maximum valve leakage, Port 1 to Port 2 or Port 2 to Port 1 = 0,4 cc/min.
- Control pilot flow = DODR, DOFR: 0,4 L/min., DOHR, DOJR: 0,6 L/min.
- Valve will open when the pilot pressure falls below 10 bar.
- Any back pressure at the drain port is directly additive to the required pilot pressure.
- With the -8 control option, the main stage valve should first be installed to the correct torque value. The T-8A pilot control valve should then be installed into the main stage valve to its required torque value.

OPTION ORDERING INFORMATION **Model Codes printed in Red are Preferred Versions and most readily available**

DO ✶ R – 8 ✶ ✶

Nominal Capacity		*Control***		*Control Pressure*		*Seal*	
D	60 L/min.	**8**	with T-8A cavity in hex body for pilot operation (see pilot control section for alternate options)	**H**	14,0 bar	**N**	Buna-N
F	120 L/min.					**V**	Viton
H	240 L/min.						
J	480 L/min.						

*** See page 162 for information on Control Options*

Visit www.sunhydraulics.com for detailed and complete technical information on our full line of products.

NORMALLY OPEN, PRESSURE ADJUSTABLE

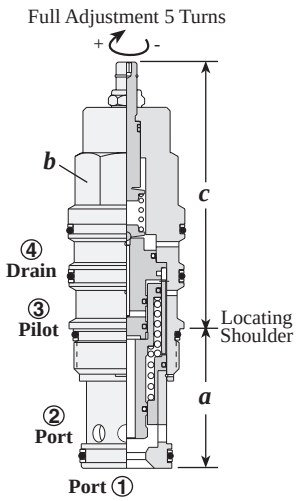

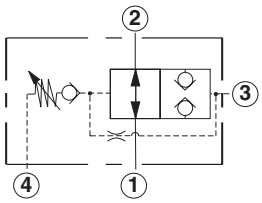

Nominal Capacity	*Typical Cartridge Model Code*	*Cavity*	*a*	*b*	*Cartridge Dimensions* *c* L	*c* C	*c* K	*Installation Torque (Nm)*
60 L/min.	**DODP – LAN**	T - 21A	34,9	22,2	79	80,0	85,0	40/50
120 L/min.	**DOFP – LAN**	T - 22A	34,9	28,6	88	89,0	94,0	60/70
240 L/min.	**DOHP – LAN**	T - 23A	46	31,8	100	101,0	106,0	200/215
480 L/min.	**DOJP – LAN**	T - 24A	63,5	41,3	122	125,0	128,0	465/500

Performance Curves

DODP **DOFP** **DOHP** **DOJP**

Fully Open Pressure Differential vs. Flow

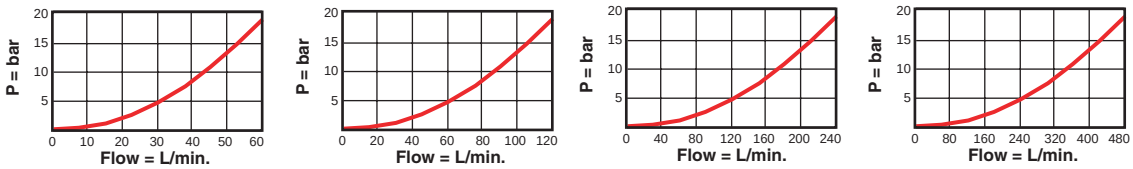

- Maximum operating pressure = 350 bar
- Minimum pilot pressure to shift valve = DODP: 30 bar, DOFP, DOHP, DOJP: 20 bar,
- Maximum valve leakage, Port 1 to Port 2 or Port 2 to Port 1 = 0,4 cc/min.
- Control pilot flow at shift = DODP, DOFP: 0,4 L/min., DOHP, DOJP: 0,6 L/min.
- Valve will open when the pilot pressure drops 85% below setting.
- Any back pressure at the drain port is directly additive to the required pilot pressure.

OPTION ORDERING INFORMATION **Model Codes printed in Red are Preferred Versions and most readily available**

DO ★ P – ★ ★ ★

Nominal Capacity		*Control***		*Nominal Adjustable Shift Pressure Range*		*Seal*	
D	60 L/min.	**L**	Standard Screw	**A**	21 - 210 bar	**N**	Buna-N
F	120 L/min.	**C**	Tamper Resistant	**B**	21 - 105 bar	**V**	Viton
H	240 L/min.	**K**	Handknob	**W**	21 - 315 bar		
J	480 L/min.						

** *See page 162 for information on Control Options*

Customer may specify pressure setting.

Visit www.sunhydraulics.com for detailed and complete technical information on our full line of products.

NORMALLY CLOSED, DIRECT OPERATED

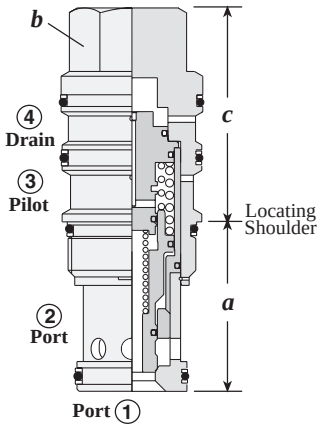

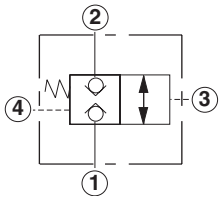

Nominal Capacity	*Typical Cartridge Model Code*	*Cavity*	*Cartridge Dimensions* a	b	c	*Installation Torque (Nm)*
60 L/min.	**DKDS – XHN**	T - 21A	34,9	22,2	46	40/50
120 L/min.	**DKFS – XHN**	T - 22A	34,9	28,6	51	60/70
240 L/min.	**DKHS – XHN**	T - 23A	46	31,8	63	200/215
480 L/min.	**DKJS – XHN**	T - 24A	63,5	41,3	81	465/500

Performance Curves

DKDS **DKFS** **DKHS** **DKJS**

Pilot Open Pressure Drop

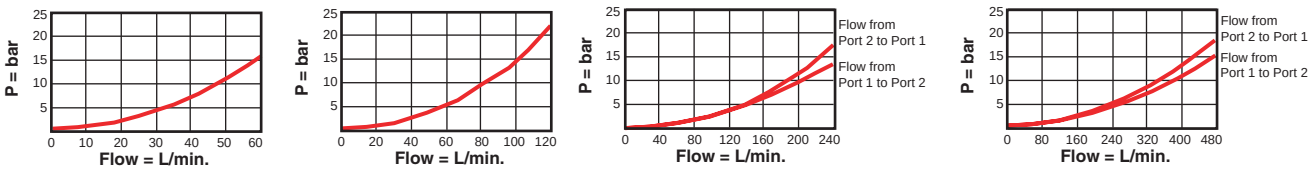

- Maximum operating pressure = 350 bar
- Minimum pilot pressure to shift valve = DKDS: 30 bar, DKFS, DKHS, DKJS: 20 bar,
- Maximum valve leakage, Port 1 to Port 2 or Port 2 to Port 1 = 0,4 cc/min.
- Pilot volume for complete shift = DKDS: 0,16 c.c., DKFS: 0,33 c.c., DKHS: 0,82 c.c., DKJS: 2,8 c.c.
- Valve will reseat when the pilot pressure drops 85% below setting.
- Any back pressure at the drain port is directly additive to the required pilot pressure.

OPTION ORDERING INFORMATION

Model Codes printed in Red are Preferred Versions and most readily available

DK ✶ S – ✶ ✶ ✶

Nominal Capacity	*Control***	*Adjustment Range*	*Seal*
D 60 L/min.	**X** Non-adjustable	**H** 14,0 bar	**N** Buna-N
F 120 L/min.			**V** Viton
H 240 L/min.			
J 480 L/min.			

** *See page 162 for information on Control Options*

Visit www.sunhydraulics.com for detailed and complete technical information on our full line of products.

NORMALLY CLOSED, PRESSURE ADJUSTABLE

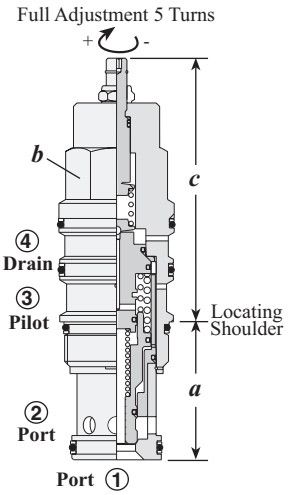

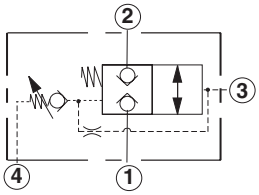

Nominal Capacity	*Typical Cartridge Model Code*	*Cavity*	*a*	*b*	*Cartridge Dimensions* *c* L	*c* C	*c* K	*Installation Torque (Nm)*
60 L/min.	**DKDP – LAN**	T - 21A	34,9	22,2	79	80,0	85,0	40/50
120 L/min.	**DKFP – LAN**	T - 22A	34,9	28,6	88	89,0	94,0	60/70
240 L/min.	**DKHP – LAN**	T - 23A	46	31,8	100	101,0	106,0	200/215
480 L/min.	**DKJP – LAN**	T - 24A	63,5	41,3	122	125,0	128,0	465/500

Performance Curves

DKDP **DKFP** **DKHP** **DKJP**

Piloted Open Pressure Drop

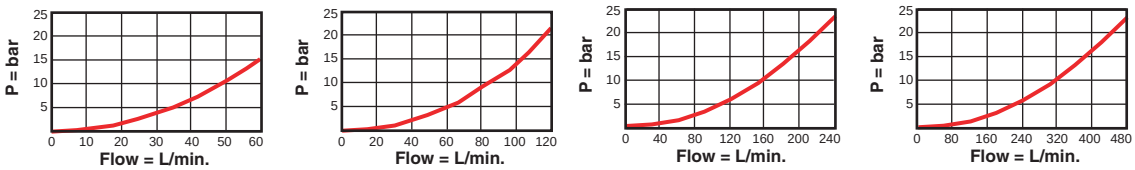

- Maximum operating pressure = 350 bar
- Minimum pilot pressure to shift valve = DKDP: 30 bar, DKFP, DKHP, DKJP: 20 bar,
- Maximum valve leakage, Port 1 to Port 2 or Port 2 to Port 1 = 0,4 cc/min.
- Control pilot flow at shift = DKDP, DKFP: 0,4 L/min., DKHP, DKJP: 0,6 L/min.
- Any back pressure at the drain port is directly additive to the required pilot pressure.
- Valve will reseat when the pilot pressure falls to 85% of the cracking value.

OPTION ORDERING INFORMATION

Model Codes printed in Red are Preferred Versions and most readily available

DK ★ P – ★ ★ ★

Nominal Capacity	*Control***	*Nominal Adjustable Shift Pressure Range*	*Seal*
D 60 L/min.	**L** Standard Screw	**A** 21 - 210 bar	**N** Buna-N
F 120 L/min.	**C** Tamper Resistant	**B** 21 - 105 bar	**V** Viton
H 240 L/min.	**K** Handknob	**W** 21 - 315 bar	
J 480 L/min.			

** *See page 162 for information on Control Options*

Adjustment Range Options:
A, B, and W are standard set at 70 bar.
Customer may specify pressure setting.

Visit www.sunhydraulics.com for detailed and complete technical information on our full line of products.

NORMALLY CLOSED, VENT-TO-OPERATE

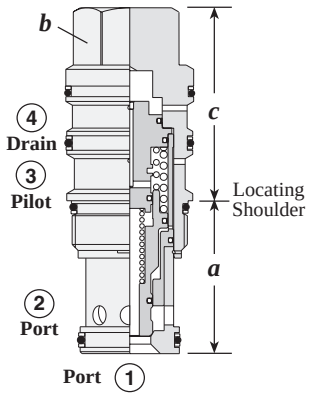

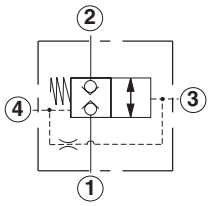

Nominal Capacity	*Typical Cartridge Model Code*	*Cavity*	*Cartridge Dimensions*			*Installation Torque (Nm)*
			a	*b*	*c*	
60 L/min.	**DKDR – XHN**	T - 21A	34,9	22,2	46	40/50
120 L/min.	**DKFR – XHN**	T - 22A	34,9	28,6	51	60/70
240 L/min.	**DKHR – XHN**	T - 23A	46	31,8	63	200/215
480 L/min.	**DKJR – XHN**	T - 24A	63,5	41,3	81	465/500

Performance Curves

DKDR **DKFR** **DKHR** **DKJR**

Piloted Open Pressure Drop

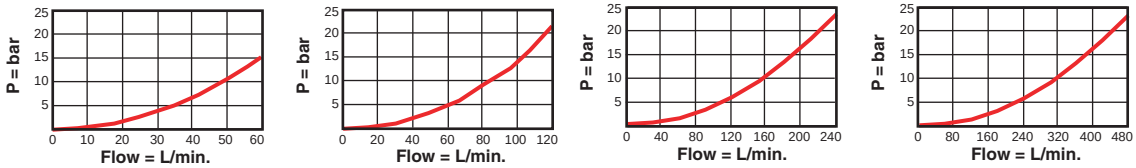

- Maximum operating pressure = 350 bar
- Minimum pilot pressure to shift valve with Port 4 vented to tank = DKDR: 30 bar, DKFR, DKHR, DKJR: 20 bar.
- Maximum valve leakage, Port 1 to Port 2 or Port 2 to Port 1 = 0,4 cc/min.
- Control pilot flow = DKDR, DKFR: 0,4 L/min., DKHR, DKJR: 0,6 L/min.
- Valve will reseat when the pilot pressure falls below 10 bar.
- Port 4 may be externally connected to a pilot switching valve. The pilot valve should have a leakage rate of less than 10 drops/min. and be able to satisfy the pilot flow requirements. Sun model DAAA-*** solenoid pilot valve is ideal for this application.

OPTION ORDERING INFORMATION **Model Codes printed in Red are Preferred Versions and most readily available**

DK ✶ R – ✶ ✶ ✶

Nominal Capacity	*Control***	*Nominal Shift Pressure*	*Seal*
D 60 L/min.	**X** Non-adjustable	**H** 14,0 bar	**N** Buna-N
F 120 L/min.			**V** Viton
H 240 L/min.			
J 480 L/min.			

*** See page 162 for information on Control Options*

Visit www.sunhydraulics.com for detailed and complete technical information on our full line of products.

NORMALLY CLOSED, VENT-TO-OPERATE WITH INTEGRAL PILOT CONTROL CAVITY

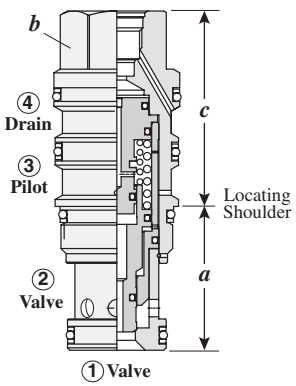

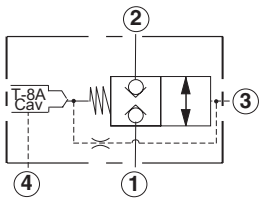

The -8 control option allows a pilot control valve to be incorporated directly into the end of the cartridge via the T-8A cavity. These pilot control cartridges are sold separately and include electro-proportional, solenoid, air pilot, and hydraulic pilot operation. See Pilot Control Cartridges on page 121.

Nominal Capacity	*Typical Cartridge Model Code*	*Cavity*	*Cartridge Dimensions*			*Installation Torque (Nm)*
			a	*b*	*c*	
60 L/min.	**DKDR – 8H***	T - 21A	34,9	22,2	46	40/50
120 L/min.	**DKFR – 8H***	T - 22A	34,9	28,6	51	60/70
240 L/min.	**DKHR – 8H***	T - 23A	46	31,8	63	200/215
480 L/min.	**DKJR – 8H***	T - 24A	63,5	41,3	81	465/500

Performance Curves

DKDR-8 **DKFR-8** **DKHR-8** **DKJR-8**

Piloted Open Pressure Drop

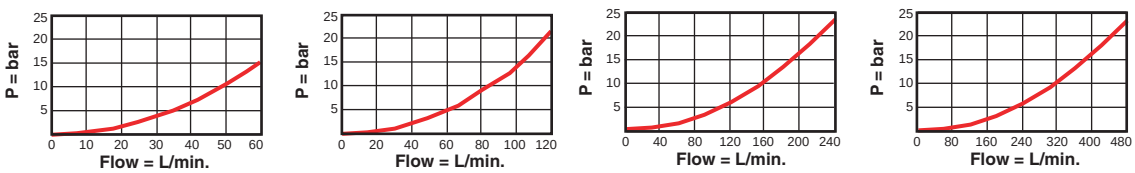

- Maximum operating pressure = 350 bar
- Minimum pilot pressure to shift valve with Port 4 vented to tank = DKDR: 30 bar, DKFR, DKHR, DKJR: 20 bar
- Maximum valve leakage, Port 1 to Port 2 or Port 2 to Port 1 = 0,4 cc/min.
- Control pilot flow = DKDR, DKFR: 0,4 L/min, DKHR, DKJR: 0,6 L/min.
- Valve will open when the pilot pressure falls below 10 bar.
- Any back pressure at the drain port is directly additive to the required pilot pressure for reliable operation.
- With the -8 control option, the main stage valve should first be installed to the correct torque value. The T-8A pilot control valve should then be installed into the main stage valve to its required torque value.

OPTION ORDERING INFORMATION **Model Codes printed in Red are Preferred Versions and most readily available**

DK ✶ R – 8 ✶ ✶

Nominal Capacity	*Control***	*Nominal Shift Pressure*	*Seal*
D 60 L/min.	**8** with T-8A cavity in hex body for pilot operation (see pilot control section for alternate options)	**H** 14,0 bar	**N** Buna-N
F 120 L/min.			**V** Viton
H 240 L/min.			
J 480 L/min.			

** *See page 162 for information on Control Options*

Visit www.sunhydraulics.com for detailed and complete technical information on our full line of products.

Directional Cartridge Valves

	Cartridge Type	*Page*
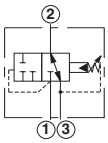	2-position, 2-way and 3-way, with Internal Drain	102
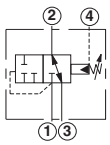	2–position, 2-way and 3-way, with External Drain	103
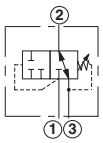	2-position, 2-way and 3-way Direct Acting, with Internal Drain	104
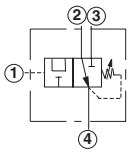	2-position, 2-way and 3-way, Direct Acting	105
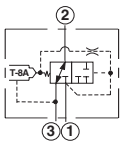	3-port, 2-way and 3-way with Integral Pilot Control Cavity	106
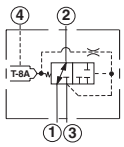	4-port, 2-way and 3-way with Integral Pilot Control Cavity	107
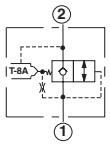	2-position, 2-way Poppet, Control 1 to 2 with Integral Pilot Control Cavity	108
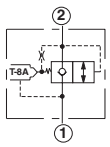	2-position, 2-way Poppet, Control 2 to 1 with Integral Pilot Control Cavity	109
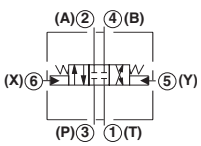	3-position, 4-way Spring Centered	110
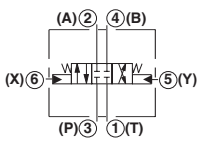	2-position, 4-way Detented	111

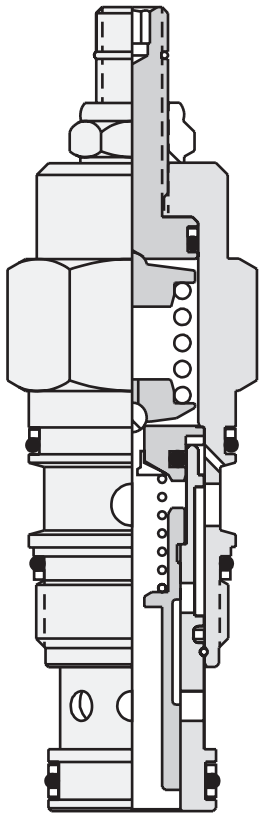

2 POSITION, 2-WAY AND 3-WAY, WITH INTERNAL DRAIN

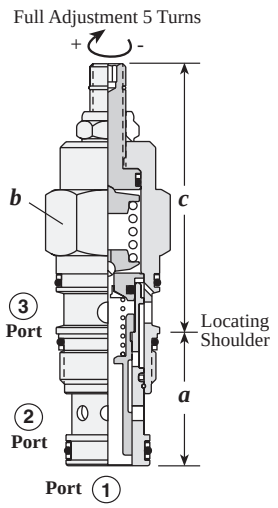

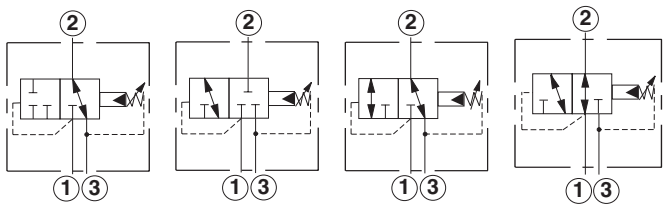

DP*A **DP*B** **DP*C** **DP*D**

Capacity	*Typical Cartridge Model Code*	*Cavity*	*Cartridge Dimensions* a	b	c L	c C	c K	*Installation Torque (Nm)*
30 L/min.	**DPBA – LAN**	T - 11A	34,9	22,2	64	66	70	40/50
60 L/min.	**DPCA – LAN**	T - 2A	34,9	28,6	72	74	78	60/70

Performance Curves

DPB*

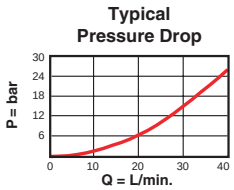

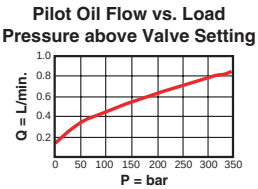

DPC*

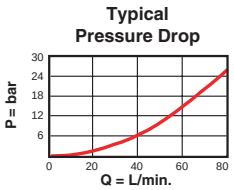

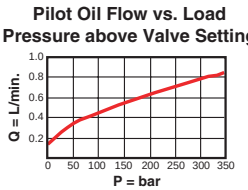

- Maximum operating pressure = 350 bar
- Maximum valve leakage = 16,4 cc/min. at 70 bar
- Control pilot flow at opening = DPBA, DPBB, DPBC, DPBD = 0,11 - 0,16 L/min., DPCA, DPCB, DPCC, DPCD = 0,16 - 0,25 L/min.
- Maximum pressure at port 3 should be limited to 210 bar.
- Pressure at port 3 is directly additive to the setting of the valve. Because of this, port 3 may not be useable as a work port in your circuit. If this is a consideration, the 4 port version of this valve may be a solution.
- For DP*C and DP*D port 3 can be blocked to prevent the cartridge from shifting.

OPTION ORDERING INFORMATION

Model Codes printed in Red are Preferred Versions and most readily available

DP ★ ★ – ★ ★ ★

Nominal Capacity

B 30 L/min.

C 60 L/min.

Version

A 2 Position 2-Way Normally Open

B 2 Position 2-Way Normally Closed

C 2 Position 3-Way Port 1 Blocked

D 2 Position 3-Way Port 1 Open

Control**

L Standard Screw

C Tamper Resistant

K Handknob

Adjustment Range

A 7 - 210 bar

B 3,5 - 105 bar

D 2 - 55 bar

E 2 - 25 bar

W 10 - 315 bar

Seal

N Buna-N

V Viton

** *See page 162 for information on Control Options*

Adjustment Range Options:
A, B, and W are standard set at 70 bar.
D Option is standard set at 25 bar.
E Option is standard set at 14 bar.
Customer may specify pressure setting.

Visit www.sunhydraulics.com for detailed and complete technical information on our full line of products.

2 POSITION, 2-WAY AND 3-WAY, WITH EXTERNAL DRAIN

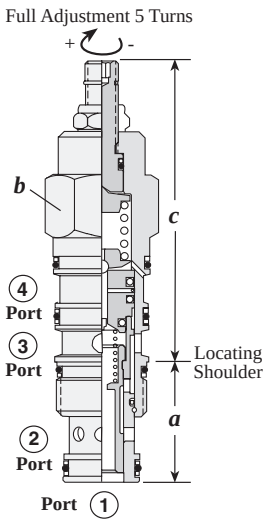

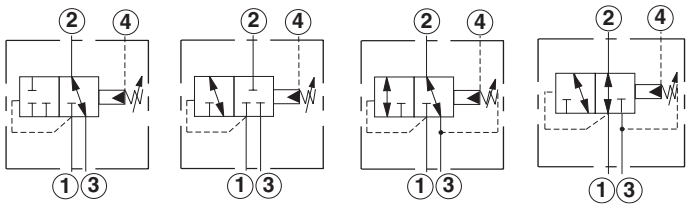

DP*M **DP*N** **DP*O** **DP*P**

Capacity	*Typical Cartridge Model Code*	*Cavity*	*Cartridge Dimensions* a	b	c L	c C	c K	*Installation Torque (Nm)*
30 L/min.	**DPBM– LAN**	T - 21A	34,9	22,2	79	81	85	40/50
60 L/min.	**DPCM– LAN**	T - 22A	34,9	28,6	88	90	94	60/70

Performance Curves

DPB*

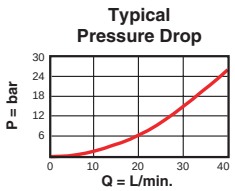

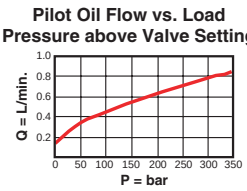

DPC*

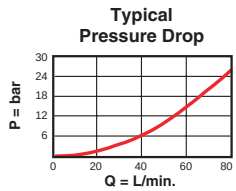

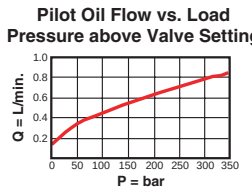

- Maximum operating pressure = 350 bar
- Maximum valve leakage = 16,4 cc/min. at 70 bar
- Control pilot flow at opening = DPBM, DPBN, DPBO, DPBP = 0,11 - 0,16 L/min., DPCM, DPCN, DPCO, DPCP = 0,16 - 0,25 L/min.
- Maximum pressure at port 3 should be limited to 210 bar.
- Pressure at port 4 is directly additive to the setting of the valve.
- Port 3 can be used as a work port.
- Port 4 can be blocked to prevent the cartridge from shifting.

OPTION ORDERING INFORMATION

Model Codes printed in Red are Preferred Versions and most readily available

DP ★ ★ – ★ ★ ★

Nominal Capacity
- **B** 30 L/min.
- **C** 60 L/min.

Version
- **M** 2 Position 2-Way Normally Open
- **N** 2 Position 2-Way Normally Closed
- **O** 2 Position 3-Way Port 1 Blocked
- **P** 2 Position 3-Way Port 1 Open

*Control***
- **L** Standard Screw
- **C** Tamper Resistant
- **K** Handknob

Adjustment Range
- **A** 7 - 210 bar
- **B** 3,5 - 105 bar
- **D** 2 - 55 bar
- **E** 2 - 25 bar
- **W** 10 - 315 bar

Seal
- **N** Buna-N
- **V** Viton

*** See page 162 for information on Control Options*

Adjustment Range Options:
A, B, and W are standard set at 70 bar.
D Option is standard set at 25 bar.
E Option is standard set at 14 bar.
Customer may specify pressure setting.

Visit www.sunhydraulics.com for detailed and complete technical information on our full line of products.

2 POSITION, 2-WAY AND 3-WAY DIRECT ACTING, INTERNAL DRAIN

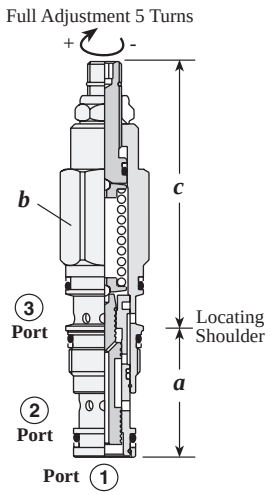

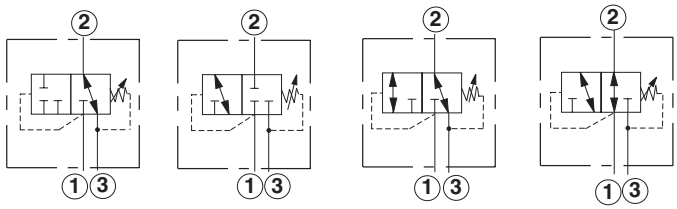

DRBA **DRBB** **DRBC** **DRBD**

Capacity	*Typical Cartridge Model Code*	*Cavity*	*Cartridge Dimensions* a	b	c L	c C	c K	*Installation Torque (Nm)*
30 L/min.	**DRBA – LAN**	T - 11A	34,9	22,2	79	81	85	40/50

Performance Curves

DRBA **DRBB** **DRBC** **DRBD**

Typical Pressure Drop

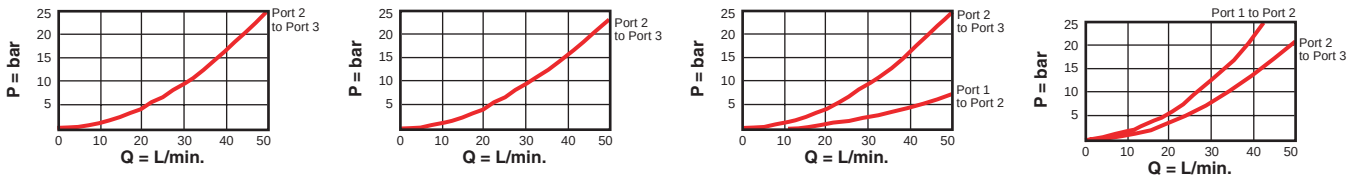

- Maximum operating pressure = 350 bar
- Maximum valve leakage = 32,8 cc/min. at 70 bar
- Maximum pressure at port 3 should be limited to 210 bar.
- Pressure at port 3 is directly additive to the setting of the valve. Because of this, port 3 may not be useable as a work port in your circuit. If this is a consideration, the 4 port version of this valve may be a solution.

OPTION ORDERING INFORMATION **Model Codes printed in Red are Preferred Versions and most readily available**

DR ★ ★ – ★ ★ ★

Nominal Capacity

B 30 L/min.

Version

A 2 Position 2-Way Normally Open

B 2 Position 2-Way Normally Closed

C 2 Position 3-Way Port 1 Blocked

D 2 Position 3-Way Port 1 Open

Control**

L Standard Screw

C Tamper Resistant

K Handknob

Adjustment Range

A 35 - 210 bar

B 14 - 105 bar

D 1,5 - 55 bar

E 1,5 - 25 bar

S 1,5 - 14 bar

W 50 - 315 bar

Seal

N Buna-N

V Viton

*** See page 162 for information on Control Options*

Adjustment Range Options:
A, B, and W are standard set at 70 bar.
D Option is standard set at 25 bar.
E and S are standard set at 14 bar.
Customer may specify pressure setting.

Visit www.sunhydraulics.com for detailed and complete technical information on our full line of products.

2-POSITION, 2-WAY AND 3 WAY, DIRECT ACTING

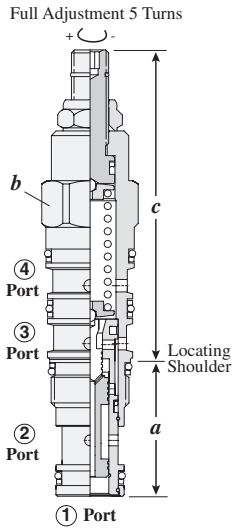

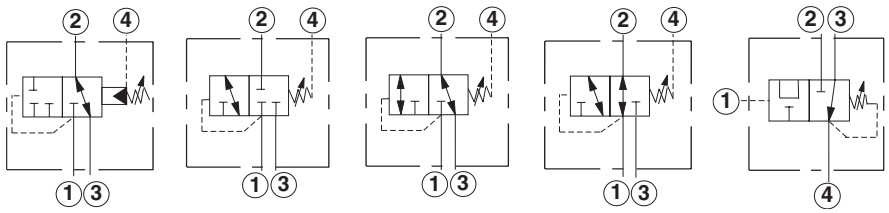

DRBM External Drain | **DRBN** External Drain | **DRBO** External Drain | **DRBP** External Drain | **DRBR** External Pilot

Capacity	*Typical Cartridge Model Code*	*Cavity*	*Cartridge Dimensions* a	b	c L	c C	c K	*Installation Torque (Nm)*
30 L/min.	**DRBM – LAN**	T - 21A	34,9	22,2	79	81	85	40/50
30 L/min.	**DRBN – LAN**	T - 21A	34,9	22,2	79	81	85	40/50
30 L/min.	**DRBO – LAN**	T - 21A	34,9	22,2	79	81	85	40/50
30 L/min.	**DRBP – LAN**	T - 21A	34,9	22,2	79	81	85	40/50
30 L/min.	**DRBR – LAN**	T - 21A	34,9	22,2	79	81	85	40/50

Performance Curves

DRBM **DRBN** **DRBO** **DRBP** **DRBR**

Typical Pressure Drop

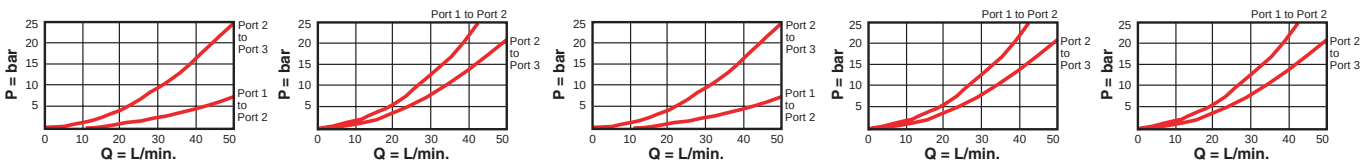

- Maximum operating pressure = 350 bar
- Maximum valve leakage = 32,8 cc/min. at 70 bar
- Maximum pressure at port 3 should be limited to 210 bar.
- DRBM, DRBN, DRBO, DRBP: Port 3 can be used as a work port
- DRBM, DRBN, DRBO, DRBP: Pressure at port 4 is directly additive to the setting of the valve.

OPTION ORDERING INFORMATION

Model Codes printed in Red are Preferred Versions and most readily available

DR ★ ★ – ★ ★ ★

Nominal Capacity

B 30 L/min.

Version

M 2-Position, 2-Way, Normally Open, External Drain

N 2-Position, 2-Way, Normally Closed, External Drain

O 2-Position, 3-Way, Port 1 Blocked, External Drain

P 2-Position, 3-Way, Port 1 Open, External Drain

R 2-Position, 3-Way, External Pilot*

Control**

L Standard Screw

C Tamper Resistant

K Handknob

*** See page 162 for information on Control Options*

Adjustment Range

A 35 - 210 bar

B 14 - 105 bar

N* 4 - 55 bar

E* 2 - 25 bar

S* 2 - 14 bar

W 50 - 315 bar

* *DRBR only available with these spring ranges.*

Adjustment Range Options:
A, B, and W are standard set at 70 bar.
N Option is standard set at 25 bar.
E and S are standard set at 14 bar.
Customer may specify pressure setting.

Seal

N Buna-N

V Viton

Visit www.sunhydraulics.com for detailed and complete technical information on our full line of products.

2-WAY AND 3-WAY WITH INTEGRAL PILOT CONTROL CAVITY

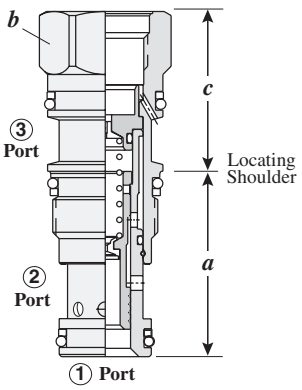

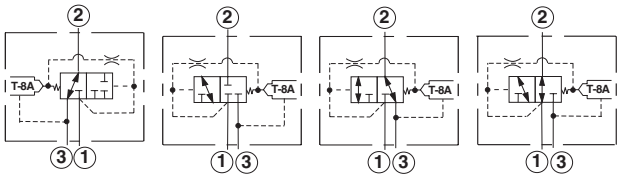

DVBA-8 DVBB-8 DVBC-8 DVBD-8

The -8 control option allows the pilot control valve to be incorporated directly into the end of the cartridge via the T-8A cavity. These pilot control cartridges are sold separately and include solenoid, air pilot, and hydraulic pilot operation. See Pilot Control Cartridges on page 121.

Capacity	*Typical Cartridge Model Code*	*Cavity*	*Cartridge Dimensions* a	b	c	*Installation Torque (Nm)*
28 L/min.	**DVBA-8FN**	T-11A	35,1	22,2	35,1	45/50
28 L/min.	**DVBB-8FN**	T-11A	35,1	22,2	35,1	45/50
28 L/min.	**DVBC-8FN**	T-11A	35,1	22,2	35,1	45/50
28 L/min.	**DVBD-8FN**	T-11A	35,1	22,2	35,1	45/50

Performance Curves

DV✶✶-8

Typical Pressure Drop

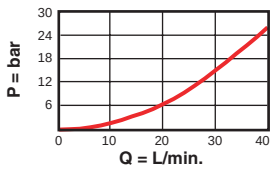

- Maximum operating pressure = 350 bar
- Control pilot flow at opening = DVBA-8, DVBB-8, DVBC-8, DVBD-8 = 0,11 - 0,16 L/min., DVCA-8, DVCB-8, DVCC-8, DVCD-8 = 0,16 - 0,25 L/min.
- Maximum leakage per path = 32,8 cc/min. at 70 bar
- Maximum pressure at port 3 should be limited to 210 bar.
- There must be a pressure source at port 1, relative to port 3, to shift the valve.
- Pressure at port 3 may oppose the opening of the valve. Because of this, port 3 may not be useable as a work port in your circuit. If this is a consideration, the 4 port version of this valve may be a solution.
- The main stage valve should first be installed to the correct torque value followed by the T-8A pilot control section into the main stage valve to its required torque value.

OPTION ORDERING INFORMATION **Model Codes printed in Red are Preferred Versions and most readily available**

DV ✶ ✶ – 8 ✶ ✶

Nominal Capacity

B 28 L/min.

Version

A 2 Position, 2-Way Normally Open

B 2 Position, 2-Way Normally Closed

C 2 Position, 3-Way, Port 1 Blocked

D 2 Position, 3-Way, Port 1 Open

Control**

8 T-8A Cavity in in hex body for pilot operation (Pilot valve to be ordered separately)

Adjustment Range

F 7 bar

Seal

N Buna-N

V Viton

*** See page 162 for information on Control Options*

Visit www.sunhydraulics.com for detailed and complete technical information on our full line of products.

4-PORT, 2-WAY AND 3-WAY WITH INTEGRAL PILOT CONTROL CAVITY

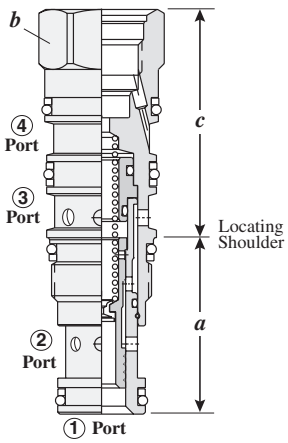

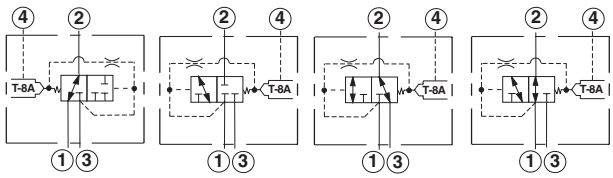

DVBM-8 DVBN-8 DVBO-8 DVBP-8

The -8 control option allows the pilot control valve to be incorporated directly into the end of the cartridge via the T-8A cavity. These pilot control cartridges are sold separately and include solenoid, air pilot, and hydraulic pilot operation. See Pilot Control Cartridges on page 121.

Capacity	*Typical Cartridge Model Code*	*Cavity*	*Cartridge Dimensions* a	b	c	*Installation Torque (Nm)*
28 L/min.	**DVBM – 8FN**	T-21A	35,1	22,2	42,9	45/50
28 L/min.	**DVBN – 8FN**	T-21A	35,1	22,2	42,9	45/50
28 L/min.	**DVBO – 8FN**	T-21A	35,1	22,2	42,9	45/50
28 L/min.	**DVBP – 8FN**	T-21A	35,1	22,2	42,9	45/50

Performance Curves

DV✶✶-8

Typical Pressure Drop

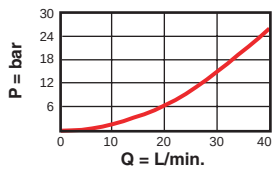

- Maximum operating pressure = 350 bar
- Control pilot flow at opening = DVBM-8, DVBN-8, DVBO-8, DVBP-8 = 0,11 - 0,16 L/min., DVCM-8, DVCN-8, DVCO-8, DVCP-8 = 0,16 - 0,25 L/min.
- Maximum leakage per path = 32,8 cc/min. at 70 bar
- Maximum pressure at port 3 should be limited to 210 bar.
- There must be a pressure source at port 1, relative to port 4, to shift the valve.
- The main stage valve should first be installed to the correct torque value followed by the T-8A pilot control section into the main stage valve to its required torque value.

OPTION ORDERING INFORMATION **Model Codes printed in Red are Preferred Versions and most readily available**

DV ✶ ✶ – 8 ✶ ✶

Nominal Capacity
- **B** 28 L/min.

Version
- **M** 2 Position, 2-Way Normally Open
- **N** 2 Position, 2-Way Normally Closed
- **O** 2 Position, 3-Way, Port 1 Blocked
- **P** 2 Position, 3-Way, Port 1 Open

*Control***
- **8** T-8A Cavity in hex body for pilot operation (Pilot valve to be ordered separately)

Adjustment Range
- **F** 7 bar

Seal
- **N** Buna-N
- **V** Viton

*** See page 162 for information on Control Options*

Visit www.sunhydraulics.com for detailed and complete technical information on our full line of products.

2-POSITION, 2-WAY POPPET, CONTROL 1 TO 2 WITH INTEGRAL PILOT CONTROL CAVITY

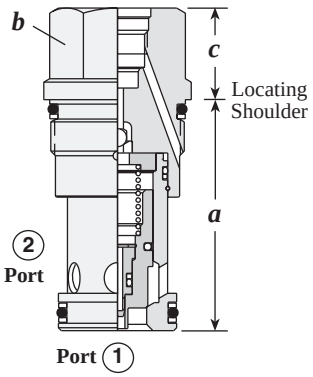

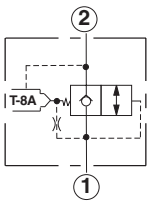

The -8 control option allows the pilot control valve to be incorporated directly into the end of the cartridge via the T-8A cavity. These pilot control cartridges are sold separately and include solenoid, air pilot, and hydraulic pilot operation. See Pilot Control Cartridges on page 121.

Capacity	*Typical Cartridge Model Code*	*Cavity*	*Cartridge Dimensions* *a*	*b*	*c*	*Installation Torque (Nm)*
60 L/min.	**DFCA – 8DN**	T - 13A	34,9	22,2	46	40/50
120 L/min.	**DFDA – 8DN**	T - 5A	41.1	28,6	17,5	60/70
240 L/min.	**DFEA – 8DN**	T - 16A	62,0	31,8	24,6	200/215
480 L/min.	**DFFA – 8DN**	T - 18A	79,5	41,3	30,2	465/500

Performance Curves

DFCA-8 **DFDA-8** **DFEA-8** **DFFA-8**

Typical Pressure Drop

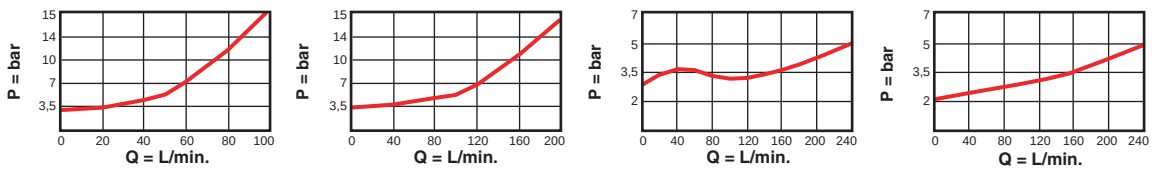

- Maximum operating pressure = 350 bar
- The main stage valve should first be installed to the correct torque value followed by the T-8A pilot control section into the main stage valve to its required torque value.
- Main stage leakage less than 0,3 cc/min.

OPTION ORDERING INFORMATION **Model Codes printed in Red are Preferred Versions and most readily available**

DF ✶ A – 8 D ✶

Nominal Capacity

C 60 L/min.
D 120 L/min.
E 240 L/min.
F 480 L/min.

*Control***

8 T-8A cavity in hex body for pilot operation (Pilot valve to be ordered separately)
Options are:
- Solenoid Pilot
- Air Pilot
- Hydraulic Pilot
- Manual Control

Adjustment Range

D 3,5 bar

Seal

N Buna-N
V Viton

2-POSITION, 2-WAY POPPET, CONTROL 2 TO 1 WITH INTEGRAL PILOT CONTROL CAVITY

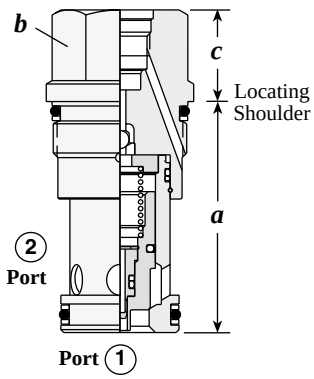

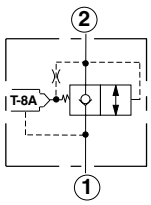

The -8 control option allows the pilot control valve to be incorporated directly into the end of the cartridge via the T-8A cavity. These pilot control cartridges are sold separately and include electro-proportional, solenoid, air pilot, and hydraulic pilot operation. See Pilot Control Cartridges on page 121.

Capacity	*Typical Cartridge Model Code*	*Cavity*	*Cartridge Dimensions*			*Installation Torque (Nm)*
			a	*b*	*c*	
60 L/min.	**DFCB – 8DN**	T - 13A	34,9	22,2	18	40/50
120 L/min.	**DFDB – 8DN**	T - 5A	41,1	28,6	18	60/70
240 L/min.	**DFEB – 8DN**	T - 16A	61,9	31,8	25	200/215

Performance Curves

DFCB-8 **DFDB-8** **DFEB-8**

Typical Pressure Drop

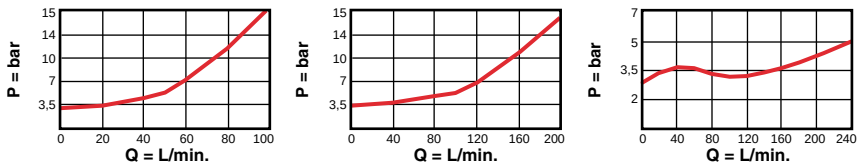

- Main stage leakage less than 5 drops/min.Maximum operating pressure = 350 bar
- The main stage valve should first be installed to the correct torque value followed by the T-8A pilot control section into the main stage valve to its required torque value.
- Main stage leakage less than 0,3 cc/min.

OPTION ORDERING INFORMATION

Model Codes printed in Red are Preferred Versions and most readily available

DF ✶ B – 8 D ✶

Nominal Capacity	*Control*	*Adjustment Range*	*Seal*
C 60 L/min.	T-8A Pilot Cavity Pilot Stage Control to be ordered separately.	**D** Bias Spring 3,5 bar	**N** Buna-N
D 120 L/min.	Options are:		**V** Viton
E 240 L/min.	• Solenoid Pilot • Air Pilot • Hydraulic Pilot • Manual Control		

Visit www.sunhydraulics.com for detailed and complete technical information on our full line of products.

3-POSITION, 4-WAY SPRING CENTERED

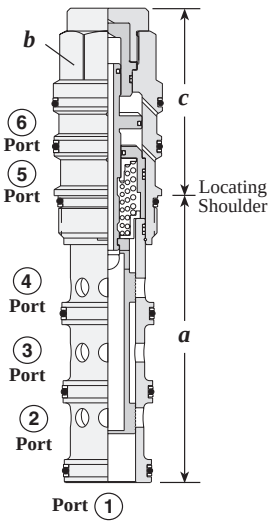

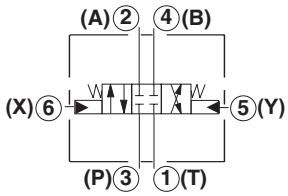

Capacity	Typical Cartridge Model Code	Cavity	Cartridge Dimensions a	b	c	Installation Torque (Nm)
40 L/min.	**DCCC – XCN**	T - 61A	84,8	22,2	50	40/50
80 L/min.	**DCDC – XCN**	T - 62A	92,2	28,6	59	60/70
160 L/min.	**DCEC – XCN**	T - 63A	114,4	31,8	73	200/215
320 L/min.	**DCFC – XCN**	T - 64A	139,7	41,3	92	465/500

Performance Curves

DCCC **DCDC** **DCEC** **DCFC**

Typical Pressure Drop

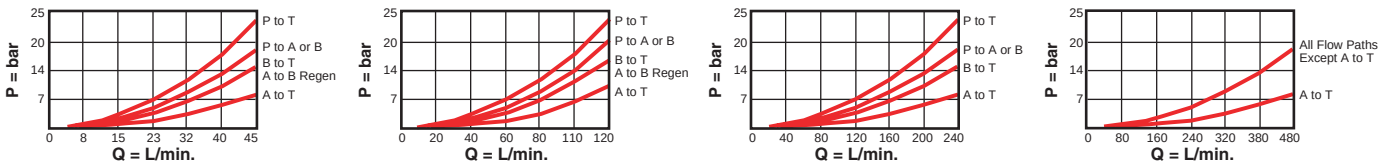

- Maximum operating pressure = 350 bar
- Maximum leakage per path = 2 in³/min. at 1000 psi
- Pilot volume for complete shift = DCCC: 0,33 cc/min., DCDC: 0,98 cc/min., DCEC: 2,8 cc/min., CFC: 6,9 cc/min.
- Minimum pilot pressure required to shift valve = DCCC: 12 bar, DCDC: 10,5 bar, DCEC, DCFC: 9 bar
- All ports will accept 350 bar, including the x and y pilot ports (port 5 and port 6).

OPTION ORDERING INFORMATION **Model Codes printed in Red are Preferred Versions and most readily available**

DC ✶ C – X ✶ ✶

Nominal Capacity

C 40 L/min.
D 80 L/min.
E 160 L/min.
F 320 L/min.

Spool Configuration

		Capacity (L/min.) C	D	E	F
C		95,0	189,0	378,0	756,0
T		38,0	91,0	151,0	378,0
H		38,0	95,0	151,0	378,0
Y		38,0	189,0	378,0	756,0
W		45,0	189,0	378,0	756,0
R		27,0	42,0	95,0	189,0
N		27,0	45,0	95,0	189,0
X		27,0	57,0	113,0	227,0
B	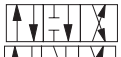	38,0	189,0	284,0	567,0
A		38,0	---	284,0	---

Seal

N Buna-N
V Viton

Typical switching pilot pressure differential between pilot ports 5 and 6 is 14 bar.

Visit www.sunhydraulics.com for detailed and complete technical information on our full line of products.

2-POSITION, 4-WAY DETENTED

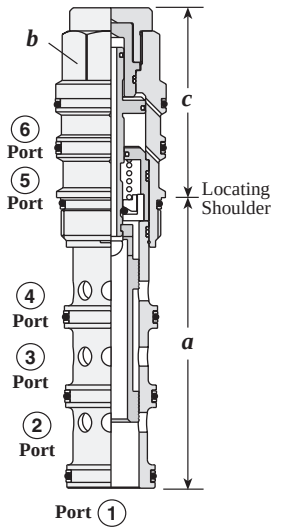

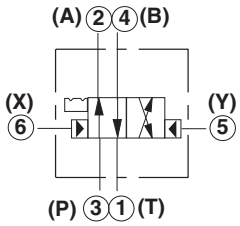

Capacity	Typical Cartridge Model Code	Cavity	Cartridge Dimensions a	b	c	Installation Torque (Nm)
40 L/min.	**DCCD – XCN**	T - 61A	84,8	22,2	50	40/50
80 L/min.	**DCDD – XCN**	T - 62A	92,2	28,6	59	60/70
160 L/min.	**DCED – XCN**	T - 63A	114,4	31,8	73	200/215
320 L/min.	**DCFD – XCN**	T - 64A	139,7	41,3	92	465/500

Performance Curves

DCCD **DCDD** **DCED** **DCFD**

Typical Pressure Drop

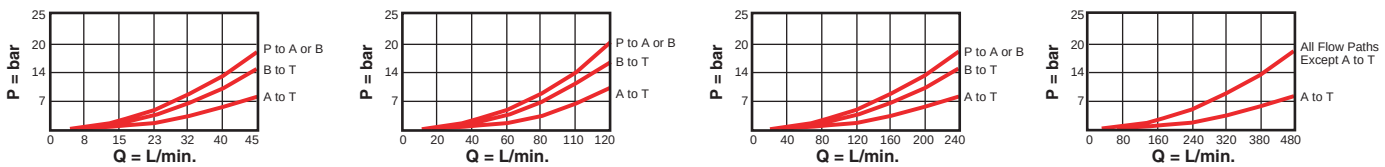

- Maximum operating pressure = 350 bar
- Maximum leakage per path = 2 in³/min. at 1000 psi
- Pilot volume for complete shift = DCCD: 0,82 cc/min., DCDD: 2,0 cc/min., DCED: 5,6 cc/min., DCFD: 14,0 cc/min.
- Minimum pilot pressure required to shift valve = 3 bar
- All ports will accept 350 bar, including the x and y pilot ports (port 5 and port 6).

OPTION ORDERING INFORMATION

Model Codes printed in Red are Preferred Versions and most readily available

DC ✶ D – X ✶ ✶

Nominal Capacity

- **C** 40 L/min.
- **D** 80 L/min.
- **E** 160 L/min.
- **F** 320 L/min.

Spool Configuration

		Capacity (L/min.) C	D	E	F
C		42,0	83,0	170,0	340,0
H		38,0	76,0	151,0	302,0
X		49,0	151,0	302,0	567,0

Seal

- **N** Buna-N
- **V** Viton

Typical switching pilot pressure differential between pilot ports 5 and 6 is 14 bar.

Visit www.sunhydraulics.com for detailed and complete technical information on our full line of products.

NOTES

Solenoid Operated Cartridge Valves

	Cartridge Type	*Page*
Normally Open / Normally Closed	2-position, 2-way Spool Directional Valve	114
Normally Open / Normally Closed	Direct Acting, 2-position, 2-way Poppet Directional Valve	115
Normally Open / Normally Closed	2-position, 3-way Spool Directional Valve	116
Normally Closed	2-position, 4-way Spool Directional Valve	117
Normally Open / Normally Closed	2-position, 2-way Spool Directional Valve – Pilot Capacity	118
Normally Open 1-3 / Normally Open 1-2	2-position, 3-way Spool Directional Valve – Pilot Capacity	119

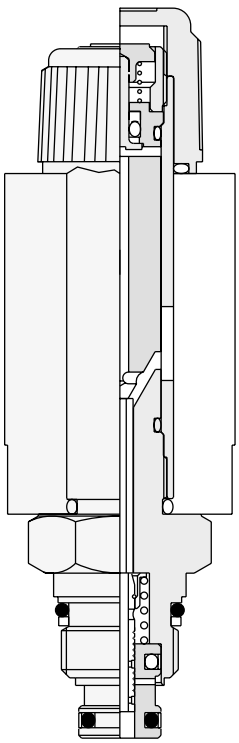

2-POSITION, 2-WAY SPOOL DIRECTIONAL VALVE

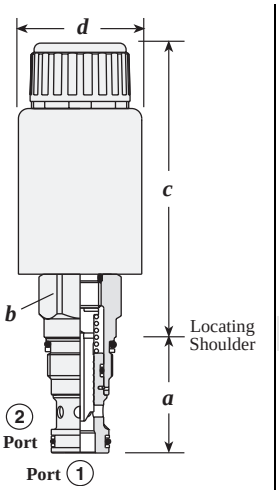

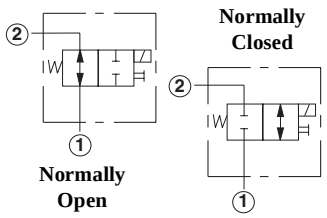

Nominal Capacity	*Typical Cartridge Model Code*	*Cavity*	*Cartridge Dimensions* a	b	c	d	*Installation Torque (Nm)*
40 L/min.	**DLDA – MHN**	T - 13A	34,9	22,4	90	38	40/50

Performance Curves

DLDA-M**

Valve Performance Limits at 10% Undervoltage and Stabilized Coil Temp.

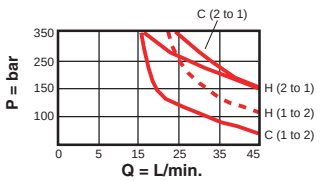

Typical Performance Pressure Differential vs. Flow

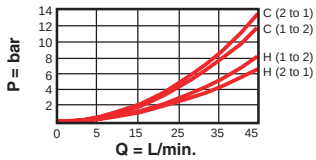

- Maximum operating pressure = 350 bar**
- Maximum Leakage at 32 cSt = 81,9 cc/min. at 210 bar
- Switching frequency = 15000 cycles/hr
- Proper installation of solenoid valves requires an extra deep socket to clear the solenoid tube. Sockets are available from Snap On tools (P/N SIML280) or Sun Hydraulics (P/N 998-100-006). See www.sunhydraulics.com for details.

* *For valves produced before January 1, 2004 (date code A041), the maximum operating pressure is 350 bar at port 2 and 250 bar at port 1.
NOTE: While the valve will operate reliably with pressures up to 350 bar at Port 1, solenoid tube fatigue life is reduced.

OPTION ORDERING INFORMATION

Model Codes printed in Red are Preferred Versions and most readily available

D L D A – ★ ★ ★ – ★ ★ ★

Nominal Capacity
D 40 L/min.

Control
M Manual Override
X No Manual Override

Spool Configuration
H Normally Open
C Normally Closed

Seal
N Buna-N
V Viton

Coil Configuration*

ISO/DIN
212 12 VDC
224 24 VDC
211 115 VAC
223 230 VAC

AMP® Junior Timer
612 12 VDC
624 24 VDC

Twin Lead
712 12 VDC
724 24 VDC

Deutsch
912 12 VDC
924 24 VDC
948 48 VDC

Metri-Pack
812 12 VDC
824 24 VDC

Twin Spade
524 24 VDC

Maximum Leakage (cc/min. at 210 bar at 32 cSt oil) = 80
Power (Watts) = 22
Operating Voltage Tolerance = ± 10%
Typical response Time (ms) = 50

* *See page 167 for Solenoid Connector Options*

Visit www.sunhydraulics.com for detailed and complete technical information on our full line of products.

DIRECT ACTING, 2-POSITION, 2-WAY POPPET DIRECTIONAL VALVE

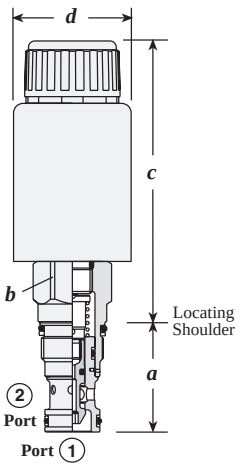

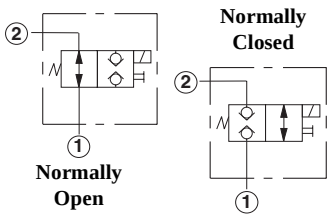

Nominal Capacity	Typical Cartridge Model Code	Cavity	Cartridge Dimensions a	b	c	d	Installation Torque (Nm)
40 L/min.	**DTDA – MHN**	T - 13A	34,9	22,4	90	38	40/50

Performance Curves

DTDA-M*N

Valve Performance Limits at 10% Undervoltage and Stabilized Coil Temperature

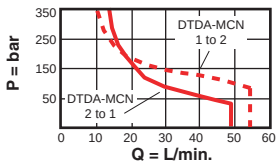

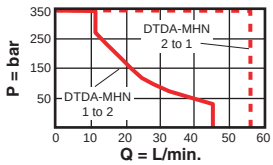

Typical Performance Pressure Differential vs. Flow

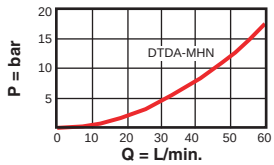

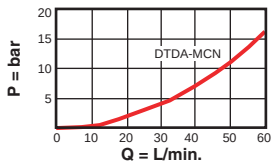

- Maximum operating pressure = 350 bar**
- Maximum Leakage at 32 cSt = 10 drops/min.
- Switching frequency = 15000 cycles/hr.
- Proper installation of solenoid valves requires an extra deep socket to clear the solenoid tube. Sockets are available from Snap On tools (P/N SIML280) or Sun Hydraulics (P/N 998-100-006). See www.sunhydraulics.com for details.

** For valves produced before January 1, 2004 (date code A041), the maximum operating pressure is 350 bar at port 2 and 250 bar at port 1. NOTE: While the valve will operate reliably with pressures up to 350 bar at Port 1, solenoid tube fatigue life is reduced.

OPTION ORDERING INFORMATION **Model Codes printed in Red are Preferred Versions and most readily available**

D T D A – ★ ★ ★ – ★ ★ ★

Nominal Capacity
D 40 L/min.

Control
M Manual Override
X No Manual Override

Spool Configuration
H Normally Open
C Normally Closed

Seal
N Buna-N
V Viton

Coil Configuration*

ISO/DIN
212 12 VDC
224 24 VDC
211 115 VAC
223 230 VAC

AMP® Junior Timer
612 12 VDC
624 24 VDC

Twin Lead
712 12 VDC
724 24 VDC

Deutsch
912 12 VDC
924 24 VDC
948 48 VDC

Metri-Pack
812 12 VDC
824 24 VDC

Twin Spade
524 24 VDC

Power (Watts) = 22
Operating Voltage Tolerance = ± 10%
Typical response Time (ms) = 50

* *See page 167 for Solenoid Connector Options*

Visit www.sunhydraulics.com for detailed and complete technical information on our full line of products.

2-POSITION, 3-WAY SPOOL DIRECTIONAL VALVE

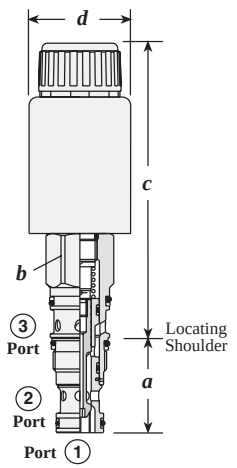

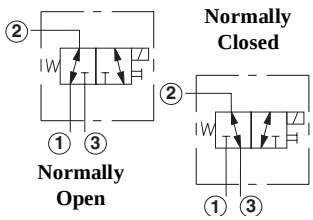

Nominal Capacity	Typical Cartridge Model Code	Cavity	Cartridge Dimensions a	b	c	d	Installation Torque (Nm)
40 L/min.	**DMDA – MNN**	T - 11A	34,9	22,4	109	38	40/50

Performance Curves

DMDA-MNN

Valve Performance Limits at 10% Undervoltage and Stabilized Coil Temperature

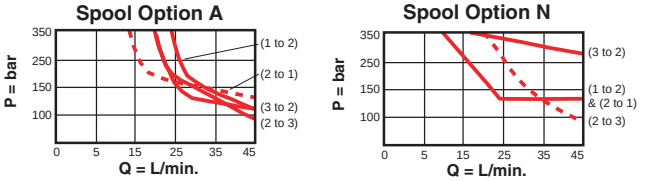

Typical Performance Pressure Differential vs. Flow

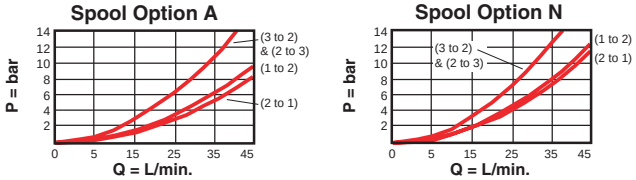

- Maximum operating pressure = 350 bar**
- Maximum Leakage at 32 cSt = 81,9 cc/min.@210 bar
- Switching frequency = 15000 cycles/hr
- Proper installation of solenoid valves requires an extra deep socket to clear the solenoid tube. Sockets are available from Snap On tools (P/N SIML280) or Sun Hydraulics (P/N 998-100-006). See www.sunhydraulics.com for details.

**For valves produced before January 1, 2004 (date code A041), the maximum operating pressure is 350 bar at ports 2 and 3 and 250 bar at port 1.
NOTE: While the valve will operate reliably with pressures up to 350 bar at Port 1, solenoid tube fatigue life is reduced.

OPTION ORDERING INFORMATION

Model Codes printed in Red are Preferred Versions and most readily available

D MDA – ✶ ✶ ✶ – ✶ ✶ ✶

Nominal Capacity
D 40 L/min.

Control
M Manual Override
X No manual Override

Spool Configuration
A Normally Open Ports 2 to 1
N Normally Open Ports 2 to 3

Seal
N Buna-N
V Viton

Coil Configuration*

ISO/DIN
212 12 VDC
224 24 VDC
211 115 VAC
223 230 VAC

AMP® Junior Timer
612 12 VDC
624 24 VDC

Twin Lead
712 12 VDC
724 24 VDC

Deutsch
912 12 VDC
924 24 VDC
948 48 VDC

Metri-Pack
812 12 VDC
824 24 VDC

Twin Spade
524 24 VDC

Maximum Leakage (cc/min. at 210 bar at 32 cSt oil) = 80
Power (Watts) = 22
Operating Voltage Tolerance = ± 10%
Typical response Time (ms) = 30-50

* *See page 167 for Solenoid Connector Options*

Visit www.sunhydraulics.com for detailed and complete technical information on our full line of products.

2-POSITION, 4-WAY SPOOL DIRECTIONAL VALVE

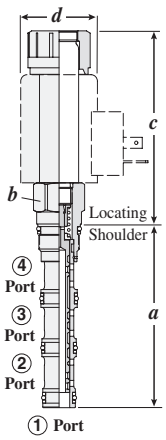

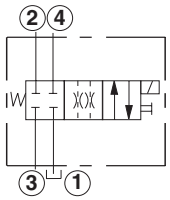

Normally Closed

Nominal Capacity	*Typical Cartridge Model Code*	*Cavity*	*Cartridge Dimensions* a	b	c	d	*Installation Torque (Nm)*
28-45 L/min.	**DNDA – MCN**	T - 31A	34,9	22,4	90	38	40/50

Performance Curves

DNDA-MCN

Valve Performance Limits at 10% Undervoltage and Stabilized Coil Temperature

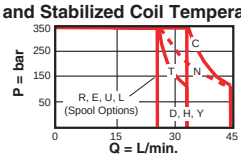

Note: Performance limits are derived with 4-way operation and symmetrical flow. For valve applications where either asymmetrical flow or 3-way operation are present, these performance limits may be reduced.

Typical Performance Pressure Differential vs. Flow

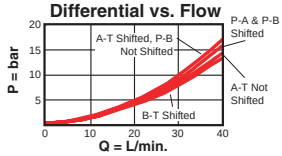

- Maximum operating pressure = 350 bar**
- Maximum Leakage at 32 cSt = 163 cc/min. at 210 bar
- Switching frequency = 15000 cycles/hr
- Proper installation of solenoid valves requires an extra deep socket to clear the solenoid tube. Sockets are available from Snap On tools (P/N SIML280) or Sun Hydraulics (P/N 998-100-006). See www.sunhydraulics.com for details.

**For valves produced before January 1, 2004 (date code A041), the maximum operating pressure is 350 bar at ports 2, 3 and 4 and 250 bar at port 1. NOTE: While the valve will operate reliably with pressures up to 350 bar at Port 1, solenoid tube fatigue life is reduced.

OPTION ORDERING INFORMATION

Model Codes printed in Red are Preferred Versions and most readily available

D N D A – ★ ★ ★ – ★ ★ ★

Nominal Capacity

D 28-45 L/min.

Control

M Manual Override

X No manual Override

Spool Configuration

C 

D 

E 

H 

L 

N 

R 

T 

U 

Y 

Seal

N Buna-N

V Viton

Coil Configuration*

ISO/DIN

212 12 VDC
224 24 VDC
211 115 VAC
223 230 VAC

AMP® Junior Timer

612 12 VDC
624 24 VDC

Twin Lead

712 12 VDC
724 24 VDC

Deutsch

912 12 VDC
924 24 VDC
948 48 VDC

Metri-Pack

812 12 VDC
824 24 VDC

Twin Spade

524 24 VDC

* See page 167 for Solenoid Connector Options

Maximum Leakage (cc/min. at 210 bar at 32 cSt oil) = 163
Power (Watts) = 22
Operating Voltage Tolerance = ± 10%
Typical response Time (ms) = 30-50

Visit www.sunhydraulics.com for detailed and complete technical information on our full line of products.

2-POSITION, 2-WAY SPOOL DIRECTIONAL VALVE – PILOT CAPACITY

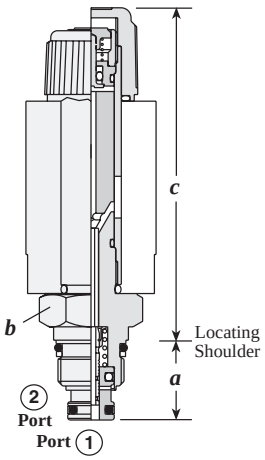

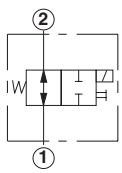

Normally Open DAAA-MHN

Normally Closed DAAA-MCN

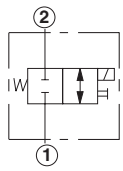

Nominal Capacity	*Typical Cartridge Model Code*	*Cavity*	*Cartridge Dimensions* *a*	*b*	*c* M	*c* C	*d*	*Installation Torque (Nm)*
1 L/min.	**DAAA – MCN**	T - 8A	19,1	22,4	75	80	31	35/40
1 L/min.	**DAAA – MHN**	T - 8A	19,1	22,4	75	80	31	35/40
1 L/min.	**DAAC – MCN**	T - 8A	19,1	22,4	75	80	31	35/40
1 L/min.	**DAAC – MHN**	T - 8A	19,1	22,4	75	80	31	35/40

Performance Curves

DAA*-M*N

Pressure vs. Flow

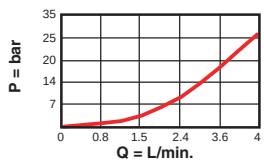

- Maximum operating pressure = 350 bar
- Maximum Leakage at 32 cSt = 10 drops/min.
- Switching frequency = 15000 cycles/hr.
- Cartridge can be installed directly into a cavity in some Sun pilot operated and ventable cartridges to provide electrically operated pilot control functions.
- Proper installation of solenoid valves requires an extra deep socket to clear the solenoid tube. Sockets are available from Snap On tools (P/N SIML280) or Sun Hydraulics (P/N 998-100-006). See www.sunhydraulics.com for details.

OPTION ORDERING INFORMATION

Model Codes printed in Red are Preferred Versions and most readily available

D A A ✶ – ✶ ✶ ✶ – ✶ ✶ ✶

Nominal Capacity

A 1 L/min.

Control

M Manual Override

C Concealed Override

Version

A Standard

C Canadian Standards Association Certified 240 bar max.

Spool Configuration

H Normally Open

C Normally Closed

Seal

N Buna-N

V Viton

Coil Configuration*

ISO/DIN

206 6 VDC
212 12 VDC
224 24 VDC
211 115 VAC
223 230 VAC

SAE J858

506 6 VDC
512 12 VDC
524 24 VDC

Twin Lead

706 6 VDC
712 12 VDC
724 24 VDC

Diameter Effective Orifice (mm) = 1,1
Operating Voltage Tolerance = ± 10%
Power (Watts) = 12
Typical response Time (ms) = 30

* *See page 167 for Solenoid Connector Options*

Visit www.sunhydraulics.com for detailed and complete technical information on our full line of products.

2-POSITION, 3-WAY SPOOL DIRECTIONAL VALVE – PILOT CAPACITY

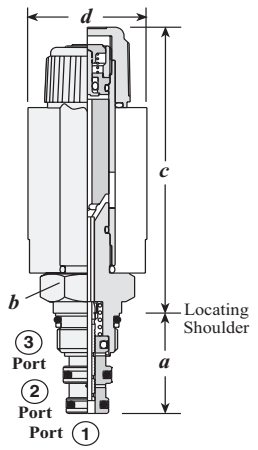

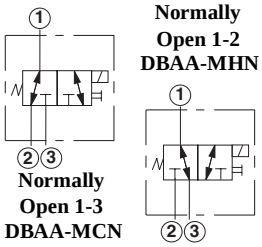

Nominal Capacity	Typical Cartridge Model Code	Cavity	Cartridge Dimensions a	b	c M	c C	d	Installation Torque (Nm)
1 L/min.	**DBAA – MCN**	T - 9A	27,7	22,4	75	80	31	35/40
1 L/min.	**DBAA – MHN**	T - 9A	27,7	22,4	75	80	31	35/40
1 L/min.	**DBAC – MCN**	T - 9A	27,7	22,4	75	80	31	35/40
1 L/min.	**DBAC – MHN**	T - 9A	27,7	22,4	75	80	31	35/40

Performance Curves

DBA*-M*N

Pressure vs. Flow

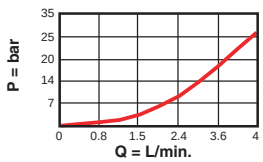

- Maximum operating pressure = 350 bar
- Maximum Leakage at 32 cSt = 10 drops/min.
- Switching frequency = 15000 cycles/hr
- Proper installation of solenoid valves requires an extra deep socket to clear the solenoid tube. Sockets are available from Snap On tools (P/N SIML280) or Sun Hydraulics (P/N 998-100-006). See www.sunhydraulics.com for details.

OPTION ORDERING INFORMATION

Model Codes printed in Red are Preferred Versions and most readily available

D B A ✶ – ✶ ✶ ✶ – ✶ ✶ ✶

Nominal Capacity

A 1 L/min.

Control

M Manual Override

C Concealed Override

Version

A Standard

C Canadian Standards Association Certified 240 bar max.

Spool Configuration

H Normally Open Ports 1 to 2

C Normally Open Ports 1 to 3

Seal

N Buna-N

V Viton

Coil Configuration*

ISO/DIN

206 6 VDC
212 12 VDC
224 24 VDC
211 115 VAC
223 230 VAC

SAE J858

506 6 VDC
512 12 VDC
524 24 VDC

Twin Lead

706 6 VDC
712 12 VDC
724 24 VDC

** See page 167 for Solenoid Connector Options*

Diameter Effective Orifice (mm) = 1,1
Operating Voltage Tolerance = ± 10%
Power (Watts) = 12
Typical response Time (ms) = 30

Visit www.sunhydraulics.com for detailed and complete technical information on our full line of products.

NOTES

Pilot Control Valves

	Cartridge Type	*Page*
Normally Open / Normally Closed	2-position 2-way, Spool Directional Valve - Pilot Capacity	122
Normally Closed / Normally Open	Hydraulically Operated, 2-position 2-way, Spool Directional Valve - Pilot Capacity	123
Normally Open / Normally Closed	Air-operated, 2-position 2-way, Spool Directional Valve - Pilot Capacity	124
Normally Open / Normally Closed	Manually Operated, 2-position 2-way, Spool Directional Valve - Pilot Capacity	125
Normally Open 1-3 / Normally Open 1-2	2-position 3-way, Spool Directional Valve – Pilot Capacity	126
Normally Open 1-2 / Normally Closed 1-3	Hydraulically Operated, 2-position 3-way, Spool Directional Valve - Pilot Capacity	127
Normally Closed 1-3 / Normally Open 1-2	Air-operated, 2-position 3-way, Spool Directional Valve - Pilot Capacity	128
Normally Open / Normally Closed	Manually Operated, 2-position 3-way, Spool Directional Valve - Pilot Capacity	129
	Direct Acting, Adjustable Pilot Relief	130
	Air-controlled, Directing Acting Pilot Relief	131
	Fully Adjustable Needle Valve - Pilot Capacity	132
	Electro-proportional Pilot Relief	133

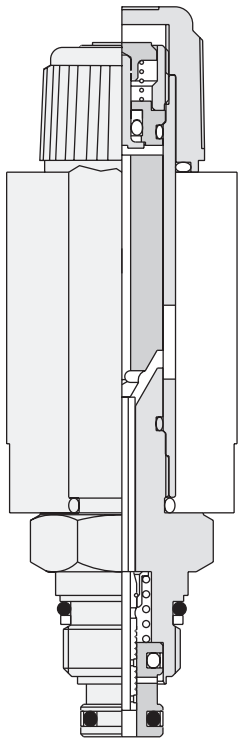

2-POSITION, 2-WAY SPOOL DIRECTIONAL VALVE – PILOT CAPACITY

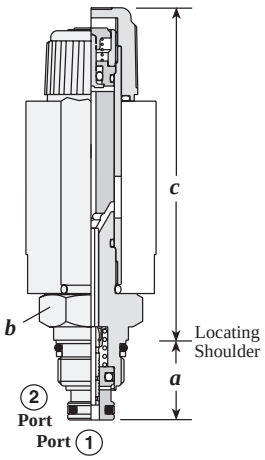

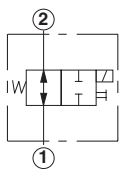

Normally Open DAAA-MHN

Normally Closed DAAA-MCN

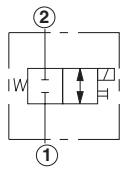

Capacity	*Typical Cartridge Model Code*	*Cavity*	*Cartridge Dimensions* *a*	*b*	*c* M	*c* C	*d*	*Installation Torque (Nm)*
1 L/min.	**DAAA – MCN**	T - 8A	19,1	22,4	75	80	31	35/40
1 L/min.	**DAAA – MHN**	T - 8A	19,1	22,4	75	80	31	35/40
1 L/min.	**DAAC – MCN**	T - 8A	19,1	22,4	75	80	31	35/40
1 L/min.	**DAAC – MHN**	T - 8A	19,1	22,4	75	80	31	35/40

Performance Curves

DAA*-M*N

Pressure vs. Flow

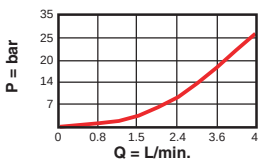

- Maximum operating pressure = 350 bar
- Maximum leakage at 32 cSt = 10 drops/min. at 350 bar
- Switching frequency = 15000 cycles/hour
- Cartridge can be installed directly into a cavity in some Sun pilot operated and ventable cartridges to provide electrically operated pilot control functions.
- Proper installation of solenoid valves requires an extra deep socket to clear the solenoid tube. Sockets are available from Snap On tools (P/N SIML280) or Sun Hydraulics (P/N 998-100-006). See www.sunhydraulics.com for details.

OPTION ORDERING INFORMATION

Model Codes printed in Red are Preferred Versions and most readily available

D A A A – M ✶ ✶ – ✶ ✶ ✶

Nominal Capacity

A 1 L/min.

Control

M Manual Override

C Concealed Override

Version

A Standard

C Canadian Standards Association Certified 240 bar max.

Spool Configuration

H Normally Open

C Normally Closed

Seal

N Buna-N

V Viton

Coil Configuration*

ISO/DIN

206 6 VDC
212 12 VDC
224 24 VDC
211 115 VAC
223 230 VAC

SAE J858

506 6 VDC
512 12 VDC
524 24 VDC

Twin Lead

706 6 VDC
712 12 VDC
724 24 VDC

* *See page 167 for Solenoid Connector Options*

Maximum Leakage (drops/min. at 350 bar at 32 cSt / 43° C) = 10
Diameter Effective Orifice (mm) = 1,1
Operating Voltage Tolerance = ± 20%
Power (Watts) = 12
Typical response Time (ms) = 30

Visit www.sunhydraulics.com for detailed and complete technical information on our full line of products.

HYDRAULICALLY OPERATED, 2-POSITION 2-WAY, SPOOL DIRECTIONAL VALVE - PILOT CAPACITY

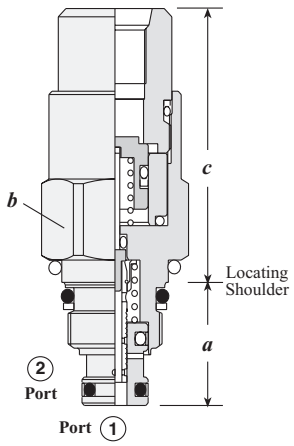

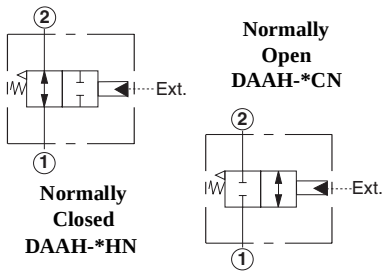

Capacity	*Typical Cartridge Model Code*	*Cavity*	*Cartridge Dimensions*			*Installation Torque (Nm)*
			a	*b*	*c*	
1 L/min.	**DAAH – BCN**	T - 8A	19,1	22,4	43	35/40

Performance Curves

DAAH

Pressure vs. Flow

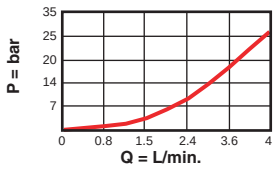

- Maximum operating pressure = 350 bar
- Maximum leakage at 32 cSt = 0,6 cc/min at 350 bar.
- Minimum pilot pressure to operate = 14 bar
- All ports will accept 350 bar including the pilot control port.
- The preferred flow path through the valve is port 2 to port 1.
- The main stage valve should first be installed to the correct torque value followed by the T-8A pilot control section into the main stage valve to its required torque value.

OPTION ORDERING INFORMATION

Model Codes printed in Red are Preferred Versions and most readily available

DA A H – ★ ★ ★

Nominal Capacity	*Pilot Port*	*Spool Configuration*	*Seal*
A 1 L/min.	**A** 1/8-27 NPTF	**H** Normally Open	**N** Buna-N
	B SAE-4	**C** Normally Closed	**V** Viton
	D 1/8-28 BSPP		

Visit www.sunhydraulics.com for detailed and complete technical information on our full line of products.

AIR-OPERATED, 2-POSITION 2-WAY, SPOOL DIRECTIONAL VALVE - PILOT CAPACITY

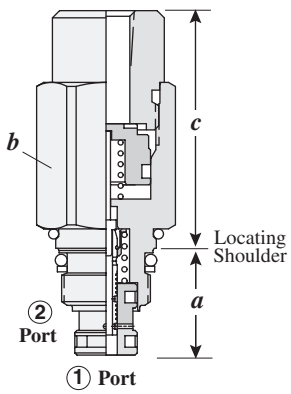

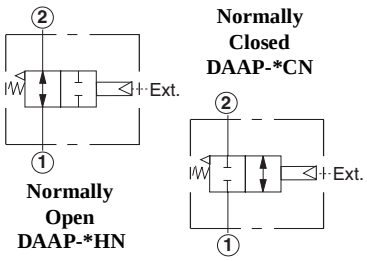

Capacity	*Typical Cartridge Model Code*	*Cavity*	*Cartridge Dimensions*			*Installation Torque (Nm)*
			a	*b*	*c*	
1 L/min.	**DAAP – FCN**	T - 8A	19,1	22,2	42,2	35/40

Performance Curves

DAAP

Pressure vs. Flow

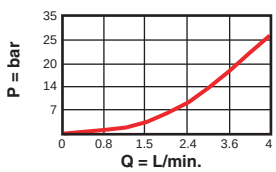

- Maximum operating pressure = 350 bar
- Maximum leakage at 32 cSt = 0,6 cc/min. at 350 bar
- Maximum pilot pressure = 5 bar
- Minimum pilot pressure to operate = 1,5 bar + port 1 pressure/7 bar
- All ports will accept 350 bar with the exception of the pilot port which accepts 35 bar maximum.
- The preferred flow path through the valve is port 2 to port 1.
- The main stage valve should first be installed to the correct torque value followed by the T-8A pilot control section into the main stage valve to its required torque value.

OPTION ORDERING INFORMATION

Model Codes printed in Red are Preferred Versions and most readily available

DA A P – ✶ ✶ ✶

Nominal Capacity	*Pilot Port*	*Spool Configuration*	*Seal*
A 1 L/min.	**E** SAE-4	**H** Normally Open	**N** Buna-N
	F 1/8-27 NPTF	**C** Normally Closed	**V** Viton
	P 1/8-28 BSPP		

Visit www.sunhydraulics.com for detailed and complete technical information on our full line of products.

MANUALLY OPERATED, 2-POSITION 2-WAY, SPOOL DIRECTIONAL VALVE - PILOT CAPACITY

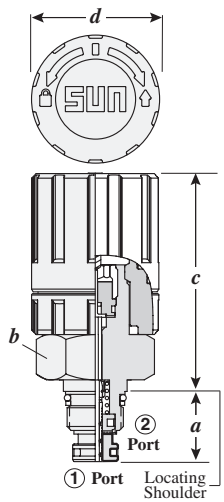

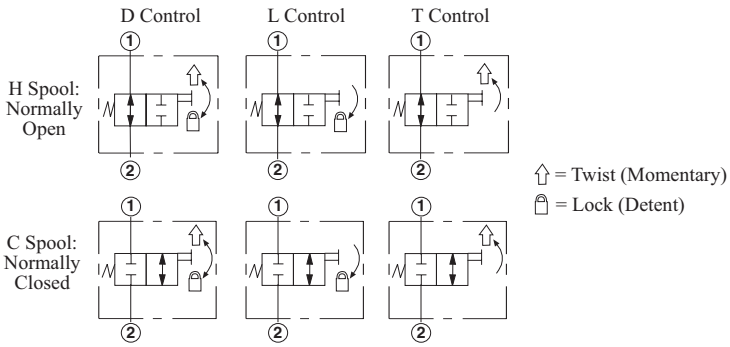

Capacity	Typical Cartridge Model Code	Cavity	Cartridge Dimensions a	b	c	d	Installation Torque (Nm)
1 L/min.	**DAAM - TCN**	T-8A	19,1	28,6	61	35,6	35/40

Performance Curves

DAAM

Pressure vs. Flow

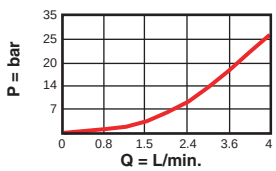

- Maximum operating pressure = 350 bar
- Maximum leakage at 32 cSt = 0,6 cc/min. at 350 bar
- The preferred flow path through the valve is port 2 to port 1.
- The main stage valve should first be installed to the correct torque value followed by the T-8A pilot control section into the main stage valve to its required torque value.

OPTION ORDERING INFORMATION

Model Codes printed in Red are Preferred Versions and most readily available

DA A M – ★ ★ ★

Nominal Capacity

A 1 L/min.

Pilot Port

D Dual (Twist/Lock)

L Lock (Detent)

T Twist (Momentary)

Spool Configuration

C Normally Closed

H Normally Open

Seal

N Buna-N

V Viton

NOTE: Designed for 10,000 cycles of operation maximum under normal conditions.

Visit www.sunhydraulics.com for detailed and complete technical information on our full line of products.

2-POSITION, 3-WAY SPOOL DIRECTIONAL VALVE – PILOT CAPACITY

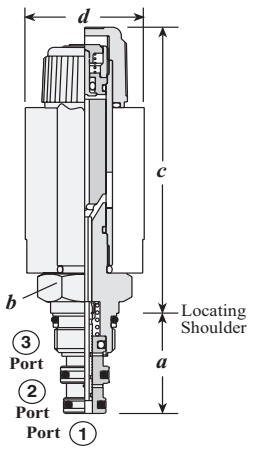

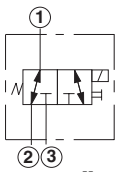

Normally Open 1-3 DBAA-MCN

Normally Open 1-2 DBAA-MHN

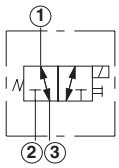

Capacity	*Typical Cartridge Model Code*	*Cavity*	*Cartridge Dimensions* a	b	c M	c C	d	*Installation Torque (Nm)*
1 L/min.	**DBAA – MCN**	T - 9A	27,7	22,4	75	80	30,2	35/40
1 L/min.	**DBAA – MHN**	T - 9A	27,7	22,4	75	80	30,2	35/40
1 L/min.	**DBAC – MCN**	T - 9A	27,7	22,4	75	80	30,2	35/40
1 L/min.	**DBAC – MHN**	T - 9A	27,7	22,4	75	80	30,2	35/40

Performance Curves

DBA*-M*N

Pressure vs. Flow

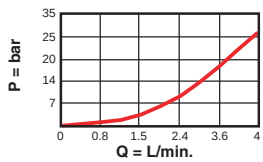

- Maximum operating pressure = 350 bar
- Maximum leakage at 32 cSt = 0,6 cc/min. at 350 bar
- Switching frequency = 15000 cycles/hour
- Proper installation of solenoid valves requires an extra deep socket to clear the solenoid tube. Sockets are available from Snap On tools (P/N SIML280) or Sun Hydraulics (P/N 998-100-006). See www.sunhydraulics.com for details.

OPTION ORDERING INFORMATION **Model Codes printed in Red are Preferred Versions and most readily available**

D B A A – M ✶ ✶ – ✶ ✶ ✶

Nominal Capacity

A 1 L/min

Control

M Manual Override

C Concealed Override

Version

A Standard

C Canadian Standards Association Certified 240 bar max.

Spool Configuration

H Normally Open Ports 1 to 2

C Normally Open Ports 1 to 3

Seal

N Buna-N

V Viton

Coil Configuration*

ISO/DIN

206 6 VDC
212 12 VDC
224 24 VDC
211 115 VAC
223 230 VAC

SAE J858

506 6 VDC
512 12 VDC
524 24 VDC

Twin Lead

706 6 VDC
712 12 VDC
724 24 VDC

* *See page 167 for Solenoid Connector Options*

Maximum Leakage (drops/min. at 350 bar at 32 cSt / 43° C) = 10
Diameter Effective Orifice (mm) = 1,1
Operating Voltage Tolerance = ± 10%

Power (Watts) = 12
Typical response Time (ms) = 30

Visit www.sunhydraulics.com for detailed and complete technical information on our full line of products.

HYDRAULICALLY OPERATED, 2-POSITION 3-WAY, SPOOL DIRECTIONAL VALVE - PILOT CAPACITY

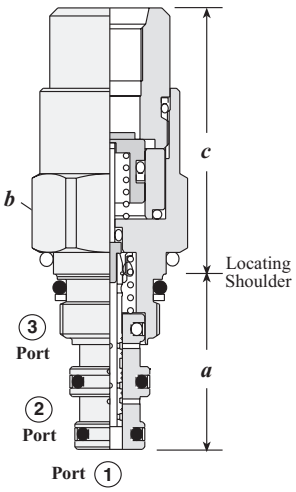

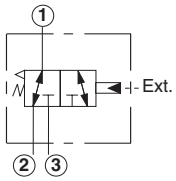

Normally Open 1-3 DBAH-*CN

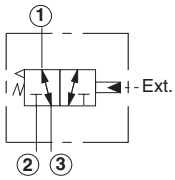

Normally Open 1-2 DBAH-*HN

Capacity	*Typical Cartridge Model Code*	*Cavity*	*Cartridge Dimensions* a	b	c	*Installation Torque (Nm)*
1 L/min.	**DBAH – BCN**	T - 9A	27,7	22,2	43	35/40

Performance Curves

DBAH

Pressure vs. Flow

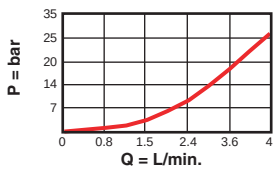

- Maximum operating pressure = 350 bar
- Maximum leakage at 32 cSt = 0,6 cc/min. at 350 bar
- Minimum pilot pressure to operate = 14 bar
- All ports will accept 350 bar including the pilot control port.

OPTION ORDERING INFORMATION

Model Codes printed in Red are Preferred Versions and most readily available

DB A H – ★ ★ ★

Nominal Capacity	*Pilot Port*	*Spool Configuration*	*Seal*
A 1 L/min.	**A** 1/8-27 NPTF	**H** Normally Open Ports 1 to 2	**N** Buna-N
	B SAE-4	**C** Normally Open Ports 1 to 3	**V** Viton
	D 1/8-28 BSPP		

Visit www.sunhydraulics.com for detailed and complete technical information on our full line of products.

AIR-OPERATED, 2-POSITION 3-WAY, SPOOL DIRECTIONAL VALVE - PILOT CAPACITY

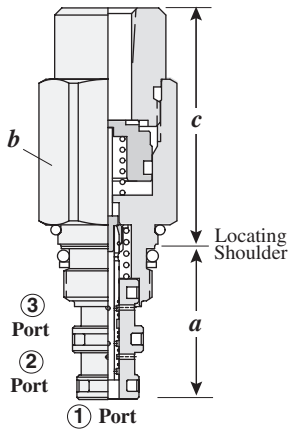

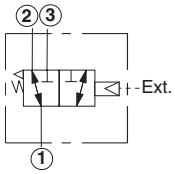

Normally Open 1-2 DBAP-*HN

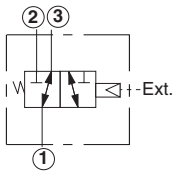

Normally Open 1-3 DBAP-*CN

Capacity	*Typical Cartridge Model Code*	*Cavity*	*Cartridge Dimensions*			*Installation Torque (Nm)*
			a	*b*	*c*	
1 L/min.	**DBAP – FCN**	T - 9A	27,7	22,2	42,2	35/40

Performance Curves

DBAP

Pressure vs. Flow

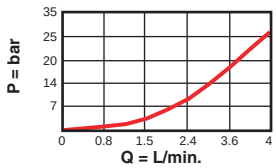

- Maximum operating pressure = 350 bar
- Maximum leakage at 32 cSt = 0,6 cc/min. at 350 bar
- Maximum pilot pressure = 5 bar
- Minimum pilot pressure to operate = 1,5 bar + port 1 pressure/7 bar
- All ports will accept 350 bar with the exception of the pilot port which accepts 35 bar maximum.

OPTION ORDERING INFORMATION

Model Codes printed in Red are Preferred Versions and most readily available

D B A P – ★★★

Nominal Capacity

A 1 L/min.

Pilot Port

E SAE-4

F 1/8-27 NPTF

P 1/8-28 BSPP

Spool Configuration

H Normally Open Ports 1 to 2

C Normally Open Ports 1 to 3

Seal

N Buna-N

V Viton

Visit www.sunhydraulics.com for detailed and complete technical information on our full line of products.

MANUALLY OPERATED, 2-POSITION 3-WAY, SPOOL DIRECTIONAL VALVE - PILOT CAPACITY

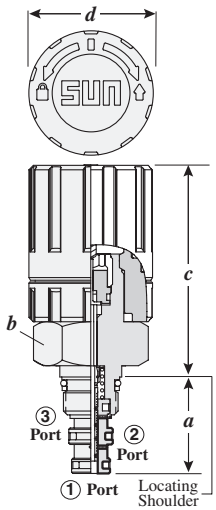

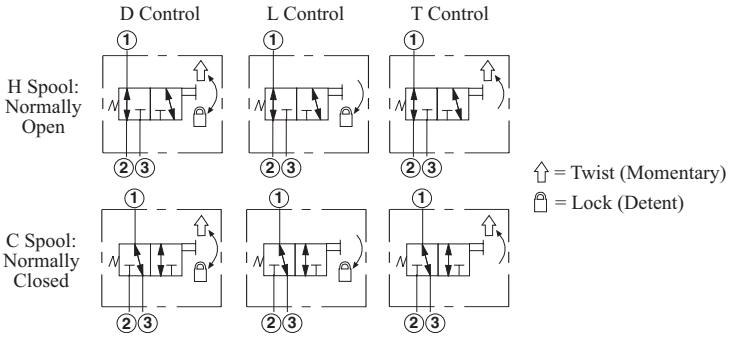

Capacity	Typical Cartridge Model Code	Cavity	Cartridge Dimensions a	b	c	d	Installation Torque (Nm)
1 L/min.	**DBAM– TCN**	T - 9A	27,7	28,6	61	35,6	35/40

Performance Curves

DBAM

Pressure vs. Flow

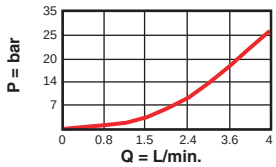

- Maximum operating pressure = 350 bar
- Maximum leakage at 32 cSt = 0,6 cc/min. at 350 bar
- All ports will accept 350 bar.

OPTION ORDERING INFORMATION

Model Codes printed in Red are Preferred Versions and most readily available

D B A M – ✶✶✶

Nominal Capacity

A 1 L/min.

Pilot Port

D Dual (Twist/Lock)

L Lock (Detent)

T Twist (Momentary)

Spool Configuration

C Normally Open 1-3

H Normally Open 1-2

Seal

N Buna-N

V Viton

NOTE: Designed for 10,000 cycles of operation maximum under normal conditions.

Visit www.sunhydraulics.com for detailed and complete technical information on our full line of products.

DIRECT ACTING, ADJUSTABLE PILOT RELIEF

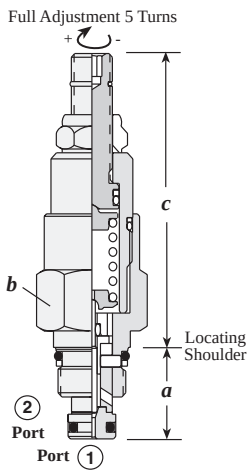

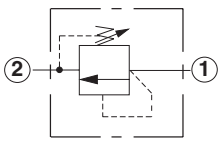

Capacity	*Typical Cartridge Model Code*	*Cavity*	*Cartridge Dimensions*					*Installation Torque (Nm)*
			a	*b*	*c*			
					L	C	K	
10 L/min.	**RBAE – LAN**	T - 8A	19,1	22,2	61	63	68	35/40

Performance Curves

RBAE

Pressure vs. Flow

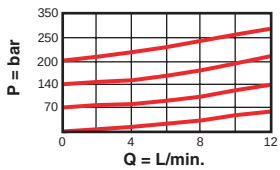

- Maximum operating pressure = 350 bar
- Maximum leakage = 0,3 cc/min. at reseat (reseat = 85% of cracking pressure).
- Ports 1 and 2 may be pressured to 350 bar.
- Back pressure at port 2 (outlet) is directly additive to the pressure setting at port 1 (inlet).
- The main stage valve should first be installed to the correct torque value followed by the T-8A pilot control section into the main stage valve to its required torque value.

OPTION ORDERING INFORMATION

Model Codes printed in Red are Preferred Versions and most readily available

R B A E – ✶✶✶

Nominal Capacity	*Control***	*Adjustment Range*	*Seal*
A 10 L/min.	**L** Standard Screw	**A** 2 - 210 bar	**N** Buna-N
	C Concealed	**B** 2 - 105 bar	**V** Viton
	K Handknob	**C** 2 - 420 bar	
		D 2 - 55 bar	
		E 2 - 25 bar	
		W 2 - 315 bar	

** *See page 162 for information on Control Options*

Adjustment Range Options:
A, B, C, and W are standard set at 70 bar.
D Option is standard set at 25 bar.
E Option is standard set at 14 bar.
Customer may specify pressure setting.

Visit www.sunhydraulics.com for detailed and complete technical information on our full line of products.

AIR-CONTROLLED, DIRECTING ACTING PILOT RELIEF

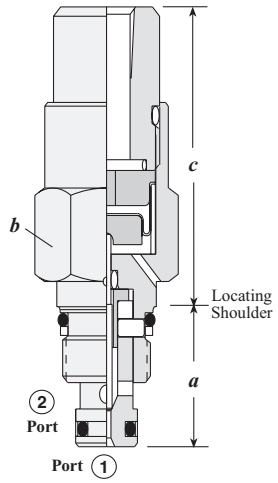

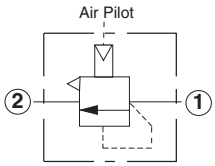

Capacity	*Typical Cartridge Model Code*	*Cavity*	*Cartridge Dimensions*			*Installation Torque (Nm)*
			a	*b*	*c*	
10 L/min.	**RBAR – AWN**	T - 8A	19,1	22,2	41	35/40
10 L/min.	**RBAR – AYN**	T - 8A	19,1	28,6	41	35/40

Performance Curves

RBAR

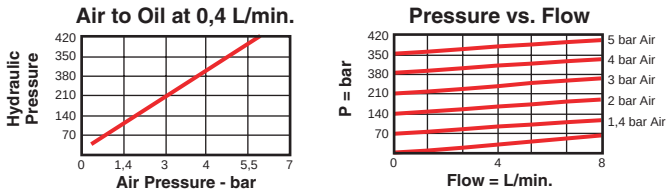

- Maximum operating pressure = 350 bar
- Maximum leakage = 0,3 cc/min. at 350 bar
- Maximum pilot pressure = 10,5 bar
- Ports 1 and 2 may be pressured to 350 bar.
- Back pressure at port 2 has no effect on the valve setting.
- The main stage valve should first be installed to the correct torque value followed by the T-8A pilot control section into the main stage valve to its required torque value.

OPTION ORDERING INFORMATION **Model Codes printed in Red are Preferred Versions and most readily available**

R B A R – ✶✶✶

Nominal Capacity	*Port*	*Air Pilot Ratio*	*Seal*
A 10 L/min.	**A** 1/8-27 NPTF Pilot Port	**W** 50:1	**N** Buna-N
	B SAE-4 Pilot Port	**Y** 75:1	**V** Viton
	D 1/8-28 BSPP Port		

Visit www.sunhydraulics.com for detailed and complete technical information on our full line of products.

FULLY ADJUSTABLE NEEDLE VALVE - PILOT CAPACITY

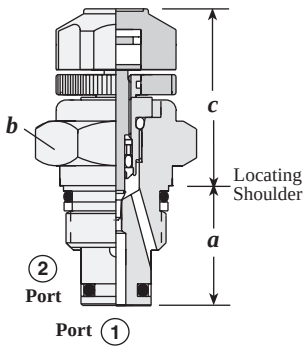

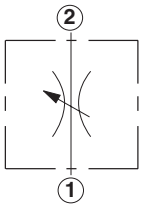

Maximum Orifice	*Typical Cartridge Model Code*	*Cavity*	*Cartridge Dimensions*			*Installation Torque (Nm)*
			a	*b*	*c*	
0,9 mm	**NFAB – KXN**	T - 8A	19,1	22,2	27,9	35/40

- Maximum operating pressure = 350 bar
- Maximum leakage at shutoff = 0,4 cc/min. at 350 bar
- Effective orifice size = 0,9 mm
- Number of counterclockwise turns fully closed to fully open = 3
- Ports 1 and 2 may be pressured to 350 bar.

OPTION ORDERING INFORMATION

Model Codes printed in Red are Preferred Versions and most readily available

N F A B – K X ★

Model Code	*Control*	*Maximum Orifice*	*Seal*
NFAB-KXN	**K** Handknob	**X** 0,9 mm	**N** Buna-N
			V Viton

Visit www.sunhydraulics.com for detailed and complete technical information on our full line of products.

ELECTRO-PROPORTIONAL PILOT RELIEF

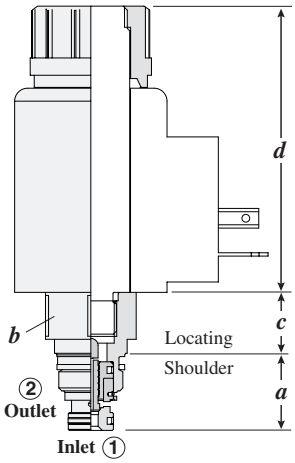

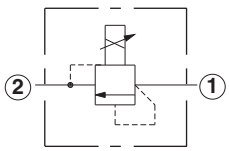

Capacity	*Typical Cartridge Model Code*	*Cavity*	*Cartridge Dimensions*				*Installation Torque (Nm)*
			a	*b*	*c*	*d*	
1 L/min.	**RBAP – MAN**	T - 8A	18,8	22,2	15,0	70,1	35/40

Performance Curves

RBAP

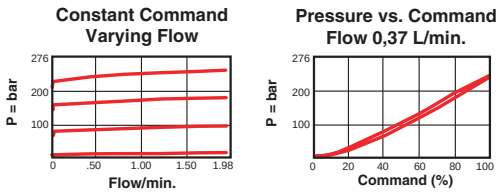

- Maximum operating pressure = 350 bar
- Maximum leakage = 24,6 cc/min at reseat
- Back pressure on the tank port (port 2) is directly additive at a 1:1 ratio to the valve setting
- Reseat exceeds 85% of crack
- Hysteresis with dither <4%
- Hysteresis with DC input <8%
- Linearity with dither <2%
- For optimum performance, an amplifier with current sensing and adjustable dither should be used. Dither should be adjustable between 100 - 250 Hz.

OPTION ORDERING INFORMATION **Model Codes printed in Red are Preferred Versions and most readily available**

RB A P – ✶ ✶ ✶

Nominal Capacity	*Control*	*Adjustment Range*	*Seal*
A 1 L/min.	**M** Manual Override (Standard)	**A** 20 - 210 bar	**N** Buna-N
		B 10 - 105 bar	**V** Viton
	NOTE: Coil must be ordered separately. Use 12V DC or 24V DC (Series 770-*) coils only. See page 167.**	**W** 35 - 350 bar	

Visit www.sunhydraulics.com for detailed and complete technical information on our full line of products.

NOTES

Shuttle Valves

	Cartridge Type	*Page*
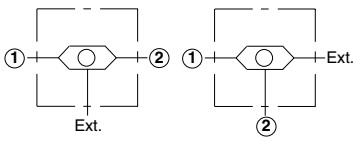	Single Ball Shuttle	136
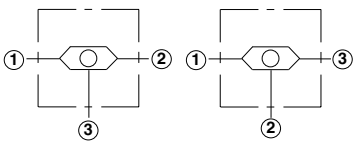	Single Ball Shuttle Valve with Signal at Port 3 or Port 2	137
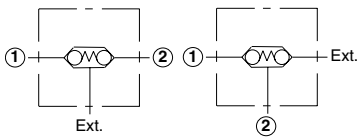	Back-to-back Check/Shuttle	138
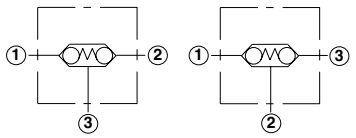	Back-to-back Check/Shuttle	139
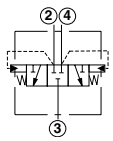	Low Side, 3-position, Hot Oil Shuttle Valve	140
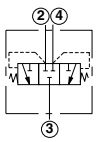	High Side, 3-position, Shuttle Valve	141
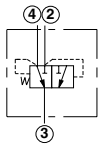	Spring Offset, 2-position, High Side Shuttle	142

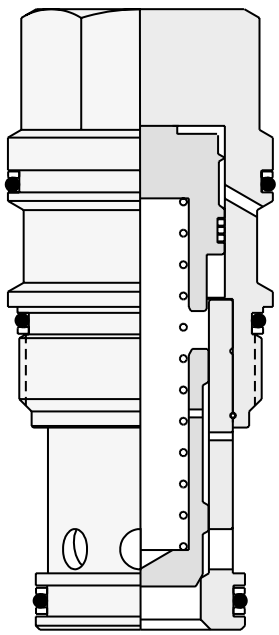

SINGLE BALL SHUTTLE

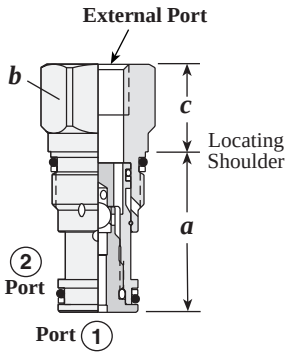

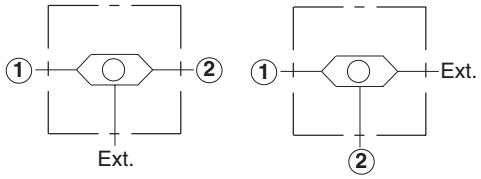

CSAW/CSAA **CSAY/CSAC**

Nominal Capacity	*Typical Cartridge Model Code*	*Cavity*	*Cartridge Dimensions*			*Installation Torque (Nm)*
			a	*b*	*c*	
5 L/min.	**CSAW– BXN**	T - 162A	31	19,1	20,8	35/40
5 L/min.	**CSAY – BXN**	T - 162A	31	19,1	20,6	35/40
10 L/min.	**CSAA – BXN**	T - 13A	35,1	22,2	30,2	40/50
10 L/min.	**CSAC – BXN**	T - 13A	35,1	22,2	30,2	40/50

Performance Curves

CSAW/CSAY **CSAA/CSAC**

Typical Pressure Drop

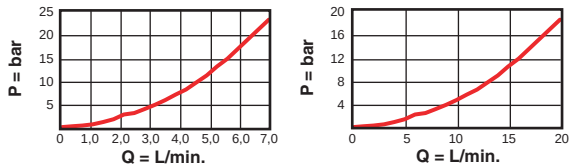

- Maximum operating pressure = 350 bar
- Maximum valve leakage = 0,4 cc/min.

OPTION ORDERING INFORMATION

Model Codes printed in Red are Preferred Versions and most readily available

CS A ✶ – ✶ X ✶

Nominal Capacity and Version

W 5 L/min. Signal at External Port

Y 5 L/min. Signal at Port 2

A 10 L/min. Signal at External Port

C 10 L/min. Signal at Port 2

Control

B .25 BSPP External Port

E SAE-4 External Port

Seal

N Buna-N

V Viton

Visit www.sunhydraulics.com for detailed and complete technical information on our full line of products.

SINGLE BALL SHUTTLE VALVE WITH SIGNAL AT PORT 3 OR PORT 2

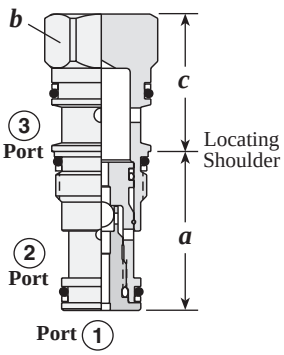

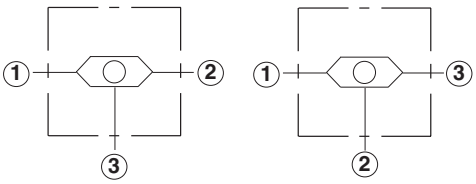

CSAX/CSAB **CSAD/CSAZ**

Nominal Capacity	*Typical Cartridge Model Code*	*Cavity*	*Cartridge Dimensions* a	b	c	*Installation Torque (Nm)*
5 L/min.	**CSAX – XXN**	T - 163A	31	19,1	32	35/40
5 L/min.	**CSAZ – XXN**	T - 163A	31	19,1	31,8	35/40
10 L/min.	**CSAB – XXN**	T - 11A	34,9	22,2	31	40/50
10 L/min.	**CSAD – XXN**	T - 11A	35,1	22,2	30,2	40/50

Performance Curves

CSAX/CSAZ **CSAB/CSAD**

Typical Pressure Drop

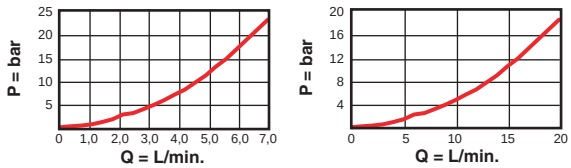

- Maximum operating pressure = 350 bar
- Maximum valve leakage = 0,4 cc/min.

OPTION ORDERING INFORMATION

Model Codes printed in Red are Preferred Versions and most readily available

CS A ★ – X X ★

Nominal Capacity and Version

X 5 L/min.
Signal at Port 3

Z 5 L/min.
Signal at Port 2

B 10 L/min.
Signal at Port 3

D 10 L/min.
Signal at Port 2

Control

X Non-adjustable

Seal

N Buna-N

V Viton

Visit www.sunhydraulics.com for detailed and complete technical information on our full line of products.

BACK-TO-BACK CHECK/SHUTTLE

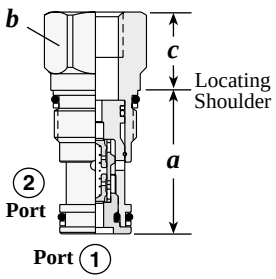

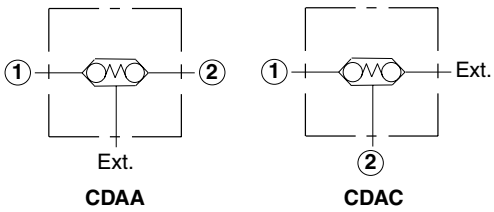

Nominal Capacity	*Typical Cartridge Model Code*	*Cavity*	*Cartridge Dimensions*			*Installation Torque (Nm)*
			a	*b*	*c*	
10 L/min.	**CDAA – BBN**	T - 13A	35,1	22,2	30,2	40/50
10 L/min.	**CDAC – BBN**	T - 13A	35,1	22,2	19	40/50

Performance Curves

CDAA/CDAC

Typical Pressure Drop

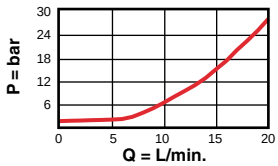

- Maximum operating pressure = 350 bar
- Maximum valve leakage = 0,4 cc/min.
- The back-to-back checks do not provide a means of lowering a signal. They will trap a high signal if the load pressures drop to a lower pressure. Some means of bleeding off the signal should be provided.
- 1,0 bar check.

OPTION ORDERING INFORMATION **Model Codes printed in Red are Preferred Versions and most readily available**

CD A ✶ – ✶ B ✶

Nominal Capacity and Version

A 10 L/min. Signal at External Port

C 10 L/min. Signal at Port 2

Control

B .25 BSPP External Port

E SAE-4 External Port

Seal

N Buna-N

V Viton

Visit www.sunhydraulics.com for detailed and complete technical information on our full line of products.

BACK-TO-BACK CHECK/SHUTTLE

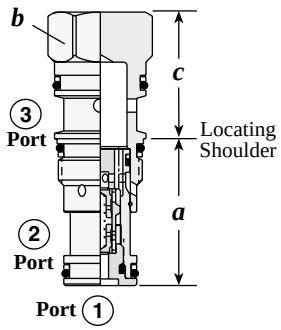

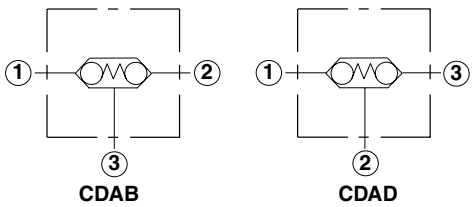

Nominal Capacity	*Typical Cartridge Model Code*	*Cavity*	*Cartridge Dimensions*			*Installation Torque (Nm)*
			a	*b*	*c*	
10 L/min.	**CDAB – XBN**	T - 11A	35,1	22,2	30,2	40/50
10 L/min.	**CDAD – XBN**	T - 11A	35,1	22,2	30,2	40/50

Performance Curves

CDAB/CDAD

Typical Pressure Drop

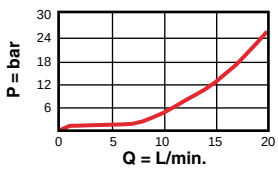

- Maximum operating pressure = 350 bar
- Maximum valve leakage = 0,4 cc/min.
- The back-to-back checks do not provide a means of lowering a signal. They will trap a high signal if the load pressures drop to a lower pressure. Some means of bleeding off the signal should be provided.
- 1,0 bar check

OPTION ORDERING INFORMATION

Model Codes printed in Red are Preferred Versions and most readily available

CD A ✶ – X B ✶

Nominal Capacity and Version

B 10 L/min.
Signal at Port 3

D 10 L/min.
Signal at Port 2

Control

X Non-adjustable

Seal

N Buna-N

V Viton

Visit www.sunhydraulics.com for detailed and complete technical information on our full line of products.

LOW SIDE, 3-POSITION, HOT OIL SHUTTLE VALVE

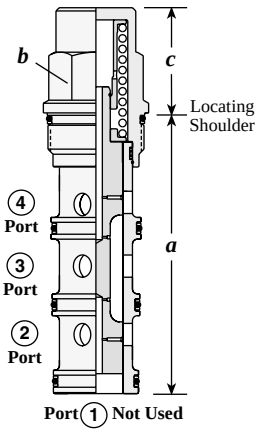

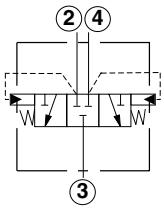

Nominal Capacity	*Typical Cartridge Model Code*	*Cavity*	*Cartridge Dimensions* a	b	c	*Installation Torque (Nm)*
60 L/min.	**DSCH – XHN**	T - 31A	84,8	22,2	30	40/50
120 L/min.	**DSEH – XHN**	T - 32A	92,2	28,6	34	60/70
240 L/min.	**DSGH – XHN**	T - 33A	114,4	31,8	42	200/215
480 L/min.	**DSIH – XHN**	T - 34A	139,7	41,3	51	465/500

Performance Curves

DSCH **DSEH** **DSGH** **DSIH**

Typical Pressure Drop

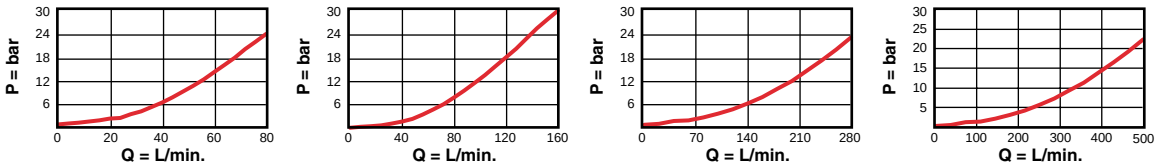

- Maximum operating pressure = 350 bar
- Pilot flow = DSCH, DSEH: 0,38 L/min., DSGH, DSIH: 0,75 L/min. (Port 2 and 4 to Port 3).
- Note: Low shift values can potentially result in charge pump pressure alone inadvertently shifting the valve. Use care when selecting shift pressure.
- Pressures on Ports 2 and 4 must equalize before reversed shift can take place.

OPTION ORDERING INFORMATION **Model Codes printed in Red are Preferred Versions and most readily available**

DS ✶ H – X ✶ ✶

Nominal Capacity	*Control*	*Shifting Pressure*	*Seal*
C 60 L/min.	**X** Non-adjustable	**G** 10,0 bar	**N** Buna-N
E 120 L/min.		**H** 14,0 bar	**V** Viton
G 240 L/min.			
I 480 L/min.			

Visit www.sunhydraulics.com for detailed and complete technical information on our full line of products.

HIGH SIDE, 3-POSITION, SHUTTLE VALVE

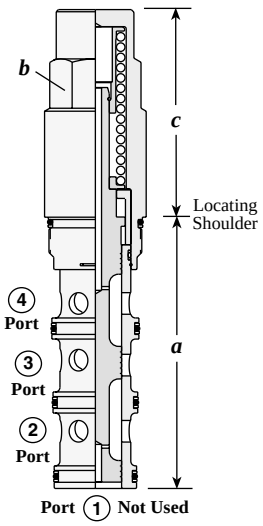

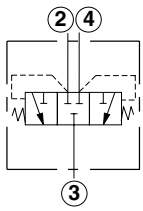

Nominal Capacity	*Typical Cartridge Model Code*	*Cavity*	*Cartridge Dimensions*			*Installation Torque (Nm)*
			a	*b*	*c*	
60 L/min.	**DSCS – XCN**	T - 31A	84,8	22,2	37	40/50
120 L/min.	**DSES – XCN**	T - 32A	92,2	28,6	42	60/70
240 L/min.	**DSGS – XCN**	T - 33A	114,4	31,8	72	200/215
480 L/min.	**DSIS – XCN**	T - 34A	139,7	41,3	107	465/500

Performance Curves

DSCS **DSES** **DSGS** **DSIS**

Pressure Drop, Port 2 or 4 to Port 3

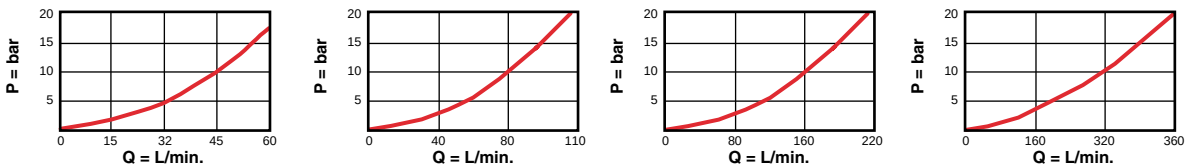

- Maximum operating pressure = 350 bar
- Maximum valve leakage = DSCS: 32,8 cc/min. at 70 bar, DSES: 49,2 cc/min. at 70 bar, DSGS: 65,5 cc/min. at 70 bar, DSIS: 81,9 cc/min. at 70 bar

OPTION ORDERING INFORMATION

Model Codes printed in Red are Preferred Versions and most readily available

DS ✶ S – X ✶ ✶

Nominal Capacity	*Control*	*Shifting Pressure*	*Seal*
C 60 L/min.	**X** Non-adjustable	**C** 2,0 bar	**N** Buna-N
E 120 L/min.		**E** 5,0 bar	**V** Viton
G 240 L/min.		**F** 7,0 bar	
I 480 L/min.		**G** 10,0 bar	

Visit www.sunhydraulics.com for detailed and complete technical information on our full line of products.

SPRING OFFSET, 2-POSITION, HIGH SIDE SHUTTLE

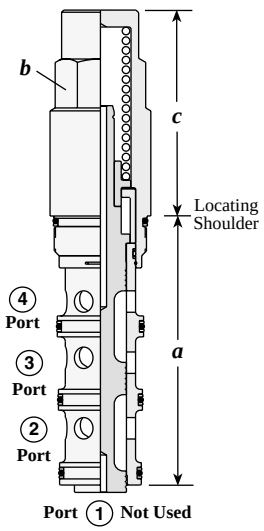

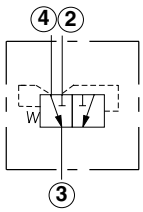

Nominal Capacity	*Typical Cartridge Model Code*	*Cavity*	*Cartridge Dimensions*			*Installation Torque (Nm)*
			a	*b*	*c*	
60 L/min.	**DSCO – XCN**	T - 31A	84,8	22,2	37	40/50
120 L/min.	**DSEO – XCN**	T - 32A	92,2	28,6	42	60/70
240 L/min.	**DSGO – XCN**	T - 33A	114,4	31,8	72	200/215
480 L/min.	**DSIO – XCN**	T - 34A	139,7	41,3	107	465/500

Performance Curves

DSCO **DSEO** **DSGO** **DSIO**

Pressure Drop, Port 4 or 2 to Port 3

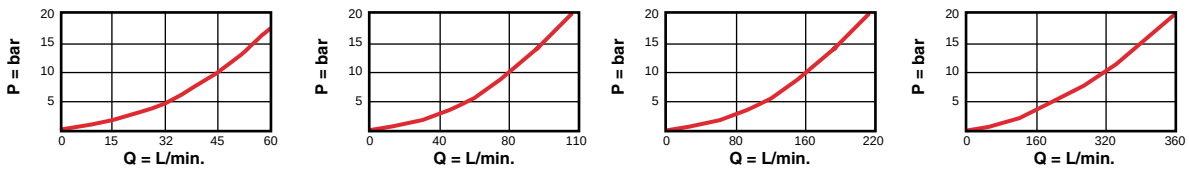

- Maximum operating pressure = 350 bar
- Minimum pilot pressure required to shift valve = C Range: 2 bar, E Range: 5 bar

OPTION ORDERING INFORMATION

Model Codes printed in Red are Preferred Versions and most readily available

DS ★ O – X ★ ★

Nominal Capacity		*Control*	*Shifting Pressure*		*Seal*	
C	60 L/min.	**X**	Non-adjustable	**C**	2,0 bar	**N** Buna-N
E	120 L/min.			**E**	5,0 bar	**V** Viton
G	240 L/min.					
I	480 L/min.					

Visit www.sunhydraulics.com for detailed and complete technical information on our full line of products.

Circuit Savers

	Cartridge Type	*Page*
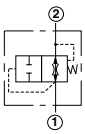	Fixed Orifice, Flow Fuse Valve	144
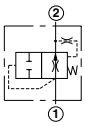	Air Bleed and Start-up Valve	145
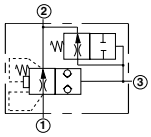	Check, Pilot-to-Close	146
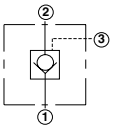	Check, Pilot-to-Close	147
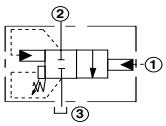	Accumulator Sense, Pump Unload Valve - Pilot Capacity	148
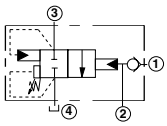	Accumulator Sense, Pump Unload Valve with Check - Pilot Capacity	149
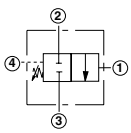	Direct Acting, 2-way Directional Valve with Drain to Port 4 - Normally Closed	150
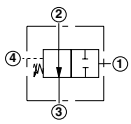	Direct Acting, 2-way Directional Valve with Drain to Port 4 - Normally Open	151
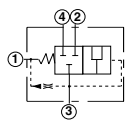	Vent-to-shift 2-position Diverter Valve - Normally Closed	152
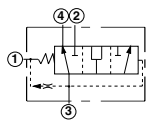	Vent-to-shift, 2-position, 3-way Diverter Valve	153
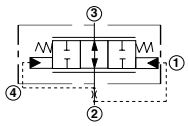	Normally Open, Bi-directional, Modulating Logic Element	154

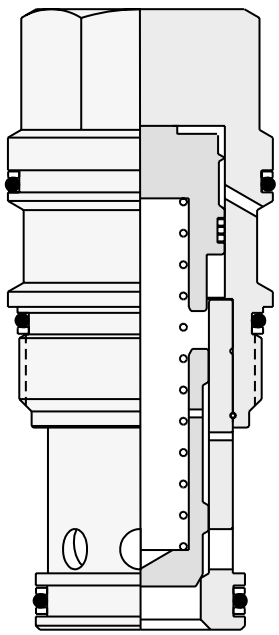

FIXED ORIFICE, FLOW FUSE VALVE

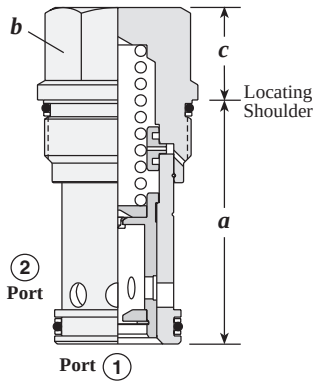

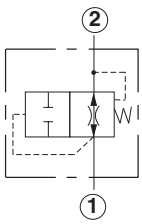

Capacity	*Typical Cartridge Model Code*	*Cavity*	*Cartridge Dimensions*			*Installation Torque (Nm)*
			a	*b*	*c*	
2 - 23 L/min.	**FQCA – XAN**	T - 13A	34,9	22,2	19	40/50
4 - 60 L/min.	**FQEA – XAN**	T - 5A	41,1	28,6	18	60/70
4 - 95 L/min.	**FQGA – XAN**	T - 16A	61,9	31,8	25	200/215
4 - 200 L/min.	**FQIA – XAN**	T - 18A	79,4	41,3	31	465/500

Performance Curves

FQCA **FQEA** **FQGA** **FQIA**

Typical Pressure Drop

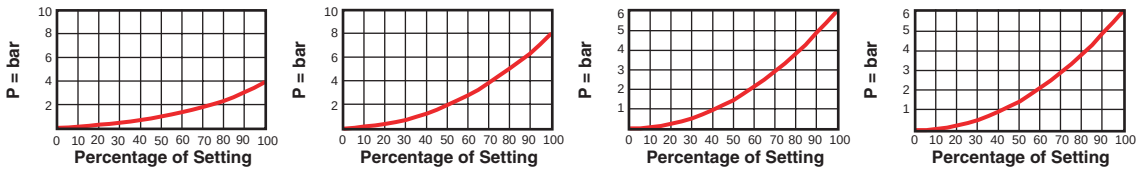

- Maximum operating pressure = 350 bar
- Maximum valve leakage = FQCA: 32,8 cc/min. at 70 bar, FQEA: 49,2 cc/min. at 70 bar, FQGA: 65,5 cc/min. at 70 bar, FQIA: 81,9 cc/min. at 70 bar.
- Valve closes when flow from port 1 to port 2 exceeds the setting of the valve. Valve resets when pressures at port 1 and port 2 are equal.
- Flow setting should be at least 25% above maximum normal system flow.

OPTION ORDERING INFORMATION **Model Codes printed in Red are Preferred Versions and most readily available**

FQ ✶ A – X A ✶

Nominal Capacity	*Control***	*Flow Rate*	*Seal*
C 2-23 L/min.	**X** Non-adjustable	**A**	**N** Buna-N
E 4-60 L/min.			**V** Viton
G 4-95 L/min.			
I 4-200 L/min.		**Customer must specify flow.**	

Visit www.sunhydraulics.com for detailed and complete technical information on our full line of products.

AIR BLEED AND START-UP VALVE

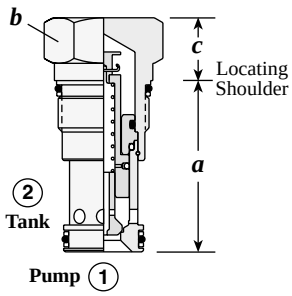

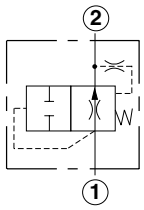

Capacity	Typical Cartridge Model Code	Cavity	Cartridge Dimensions a	b	c	Installation Torque (Nm)
15 - 200 L/min.	**NQEB – XAN**	T - 3A	47,8	28,6	18	60/70

Performance Curves

NQEB

Typical Pressure Drop

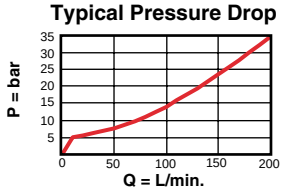

Approximate Closing Time after Air has been Purged

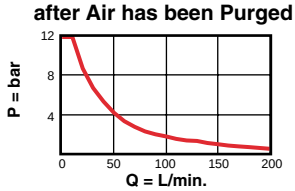

- Maximum operating pressure = 350 bar
- Air-bleed and start-up valves require a minimum of 15 L/min. flow rate and 5,5 bar system pressure.
- The valve will re-open when system pressure falls below 1,7 bar.
- After air has been purged, closing times vary from approximately 12 seconds at 15 L/min. to 0.5 seconds at 200 L/min.

OPTION ORDERING INFORMATION

Model Codes printed in Red are Preferred Versions and most readily available

NQ E B – X A ★

Nominal Capacity	*Control***	*Flow Rate*	*Seal*
E 15-200 L/min.	**X** Non-adjustable	**A**	**N** Buna-N
			V Viton

Visit www.sunhydraulics.com for detailed and complete technical information on our full line of products.

CHECK, PILOT-TO-CLOSE

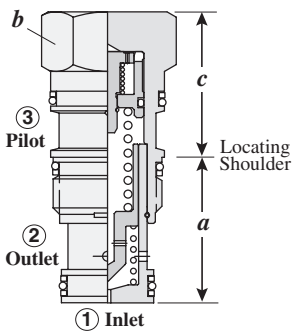

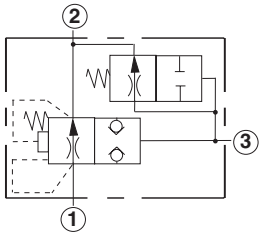

Orifice Diameter	Typical Cartridge Model Code	Cavity	Cartridge Dimensions a	b	c	Installation Torque (Nm)
1,27 mm	**COFO – XDN**	T - 2A	35,1	28,6	35,1	60/70

Performance Curves

COFO

Pressure vs. Flow

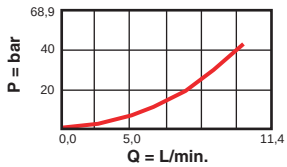

- Maximum operating pressure = 350 bar
- Pilot ratio = 120:1
- Leakage rate when closed = 0,3 cc/min.

OPTION ORDERING INFORMATION

Model Codes printed in Red are Preferred Versions and most readily available

CO F O – X D N

Orifice Diameter	*Control***	*Minimum Pressure*	*Seal*
F 1,27 mm	**X** Standard Pilot	**D** 3,5 bar	**N** Buna-N
			V Viton

*** See page 162 for information on Control Options.*

Visit www.sunhydraulics.com for detailed and complete technical information on our full line of products.

CHECK, PILOT-TO-CLOSE

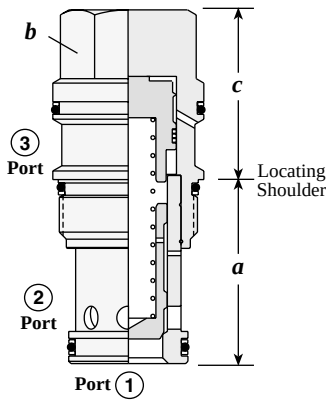

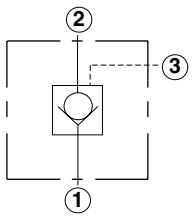

Capacity	Typical Cartridge Model Code	Cavity	Cartridge Dimensions a	b	c	Installation Torque (Nm)
40 L/min.	**COBA – XCN**	T - 163A	31	19,1	32	35/40
80 L/min.	**CODA – XCN**	T - 11A	34,9	22,2	31	40/50
160 L/min.	**COFA – XCN**	T - 2A	34,9	28,6	35	60/70
320 L/min.	**COHA – XCN**	T - 17A	46	31,8	46	200/245
640 L/min.	**COJA – XCN**	T - 19A	63,5	41,3	59	465/500

Performance Curves

COBA **CODA** **COFA** **COHA** **COJA**

Typical Pressure Drop

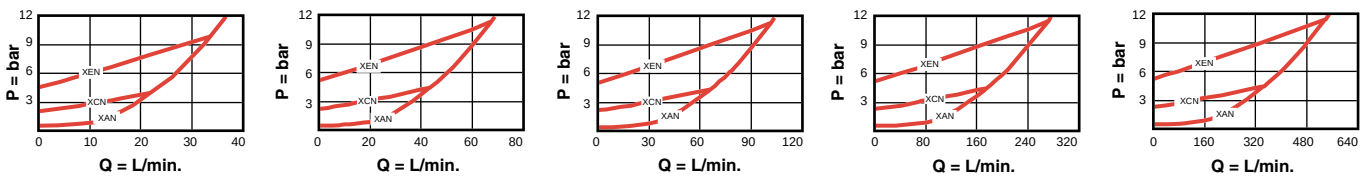

- Maximum operating pressure = 350 bar
- Pilot ratio = 1.8:1
- Leakage rate when closed = 0,07 cc/min.

OPTION ORDERING INFORMATION

Model Codes printed in Red are Preferred Versions and most readily available

CO ✶ A – ✶ ✶ ✶

Nominal Capacity		*Control***		*Cracking Pressure*		*Seal*	
B	40 L/min.	**X**	Standard Pilot	**A***	0,3 bar	**N**	Buna-N
D	80 L/min.			**B***	1,0 bar	**V**	Viton
F	160 L/min.			**C**	2,0 bar		
H	320 L/min.			**D**	3,5 bar		
J	640 L/min.			**E**	5,0 bar		
				F	7,0 bar		

** *See page 162 for information on Control Options*

* *COBA and COFA are not available in A and B Cracking Pressures.*

Visit www.sunhydraulics.com for detailed and complete technical information on our full line of products.

ACCUMULATOR SENSE, PUMP UNLOAD VALVE - PILOT CAPACITY

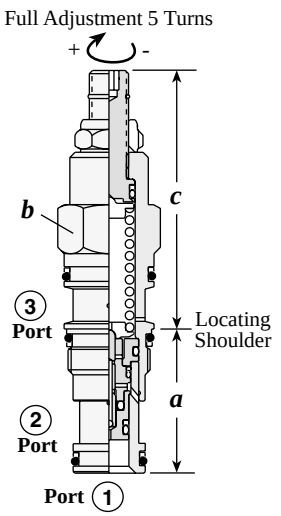

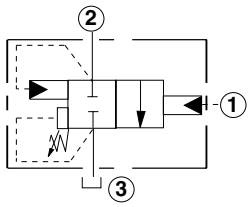

Capacity	*Typical Cartridge Model Code*	*Cavity*	*Cartridge Dimensions*				*Installation Torque (Nm)*
			a	*b*	*c* L	*c* C	
0,8 L/min.	**QPAA – LAN**	T - 11A	34,9	22,2	64	66	40/50

- Maximum operating pressure = 350 bar
- When applying this cartridge, a separate drain line is required to prevent erratic operation caused by tank line pressure fluctuations.
- Note: Careful consideration should be given when selecting an adjustment range. System pressure drops and flows tend to affect the operation of unloading valves.

OPTION ORDERING INFORMATION

Model Codes printed in Red are Preferred Versions and most readily available

QP A ★ – ★ ★ ★

Nominal Capacity

A 0,8 L/min.

Version

A 15% Nominal Differential

B 20% Nominal Differential

C 30% Nominal Differential

D 50% Nominal Differential

Control**

L Standard Screw

C Tamper Resistant

Adjustment Range

A 70 - 210 bar

B 28 - 105 bar

C 140 - 350 bar

D 14 - 55 bar

Seal

N Buna-N

V Viton

*** See page 162 for information on Control Options*

Adjustment Range Options:
A and B Options are standard set at 70 bar.
D Option is standard set at 25 bar.
C Option is standard set at 140 bar.
Customer may specify pressure setting.

Visit www.sunhydraulics.com for detailed and complete technical information on our full line of products.

ACCUMULATOR SENSE, PUMP UNLOAD VALVE WITH CHECK - PILOT CAPACITY

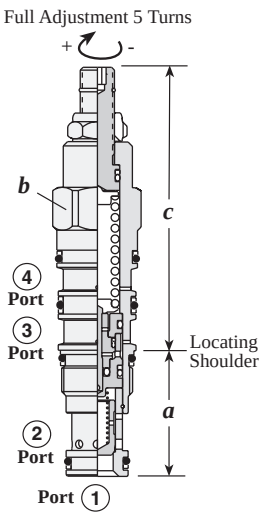

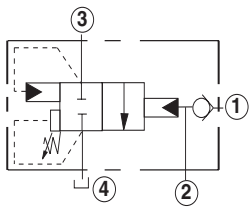

Capacity	Typical Cartridge Model Code	Cavity	Cartridge Dimensions a	b	c L	c C	Installation Torque (Nm)
0,8 L/min.	**QCDA – LAN**	T - 21A	34,9	22,2	79	81	40/50

- Maximum operating pressure = 350 bar
- Check valve = 50 L/min.
- Free flow check cracking pressure = 0,3 bar
- Pressure drop, port 1 to port 2 = 5 bar at 50 L/min.
- When applying this cartridge, a separate drain line is required to prevent erratic operation caused by tank line pressure fluctuations.
- Note: Careful consideration should be given when selecting an adjustment range. System pressure drops and flows tend to affect the operation of unloading valves.

OPTION ORDERING INFORMATION

Model Codes printed in Red are Preferred Versions and most readily available

QC D ★ – ★ ★ ★

Nominal Capacity

D 0,8 L/min.

Version

A 15% Nominal Differential

B 20% Nominal Differential

C 30% Nominal Differential

D 50% Nominal Differential

*Control***

L Standard Screw

C Tamper Resistant

Adjustment Range

A 70 - 210 bar

B 28 - 105 bar

C 140 - 350 bar

D 14 - 55 bar

Seal

N Buna-N

V Viton

*** See page 162 for information on Control Options*

Adjustment Range Options:
A and B Options are standard set at 70 bar.
D Option is standard set at 25 bar.
C Option is standard set at 140 bar.
Customer may specify pressure setting.

Visit www.sunhydraulics.com for detailed and complete technical information on our full line of products.

DIRECT ACTING, 2-WAY DIRECTIONAL VALVE WITH DRAIN TO PORT 4 - NORMALLY CLOSED

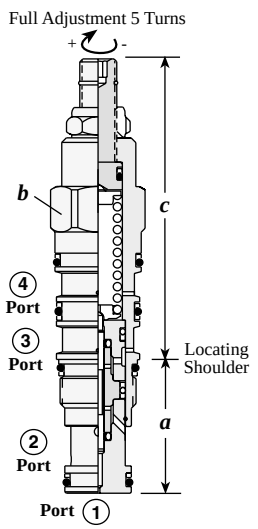

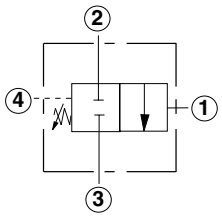

Capacity	*Typical Cartridge Model Code*	*Cavity*	*Cartridge Dimensions*			*Installation Torque (Nm)*
			a	*b*	*c*	
2 L/min.	**DRAX – LAN**	T - 21A	34,9	22,2	79	40/50

Performance Curves

DRAX

Pressure Drop vs. Flow
Port 2 to Port 3

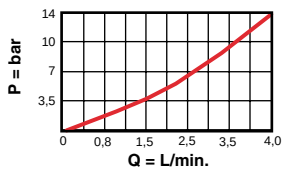

- Maximum operating pressure = 350 bar
- The pilot area (port 1) and the spring chamber drain (port 4) are positively sealed.
- There is spool leakage between the work ports (ports 2 and 3), 0,8 cc/min. at 70 bar.

OPTION ORDERING INFORMATION

Model Codes printed in Red are Preferred Versions and most readily available

DR A X – L ✶ N

Nominal Capacity	*Control***	*Adjustment Range*	*Seal*
A 2 L/min.	**L** Standard Screw	**A** 70 - 210 bar	**N** Buna-N
		C 140 - 420 bar	**V** Viton

** *See page 162 for information on Control Options*

Adjustment Range Options:
A Option is standard set at 70 bar.
C Option is standard set at 140 bar.
Customer may specify pressure setting.

Visit www.sunhydraulics.com for detailed and complete technical information on our full line of products.

DIRECT ACTING, 2-WAY DIRECTIONAL VALVE WITH DRAIN TO PORT 4 - NORMALLY OPEN

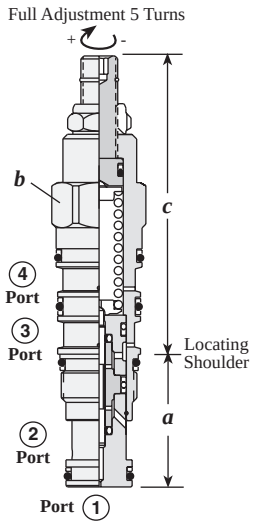

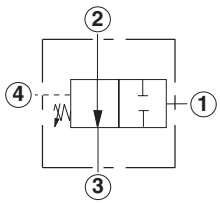

Capacity	Typical Cartridge Model Code	Cavity	Cartridge Dimensions a	b	c	Installation Torque (Nm)
2 L/min.	**DRAY – LAN**	T - 21A	34,9	22,2	81	40/50

Performance Curves

DRAY

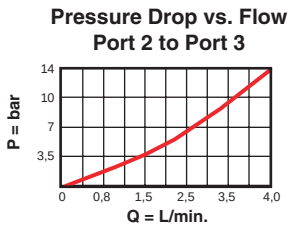

- Maximum operating pressure = 350 bar
- The pilot area (port 1) and the spring chamber drain (port 4) are positively sealed.
- There is spool leakage between the work ports (ports 2 and 3), 0,8 cc/min. at 70 bar.

OPTION ORDERING INFORMATION

Model Codes printed in Red are Preferred Versions and most readily available

DR A Y – L ✶ N

Nominal Capacity	*Control***	*Adjustment Range*	*Seal*
A 2 L/min.	**L** Standard Screw	**A** 70 - 210 bar	**N** Buna-N
		C 140 - 420 bar	**V** Viton

** *See page 162 for information on Control Options*

Adjustment Range Options:
A Option is standard set at 70 bar.
C Option is standard set at 140 bar.
Customer may specify pressure setting.

Visit www.sunhydraulics.com for detailed and complete technical information on our full line of products.

VENT-TO-SHIFT 2-POSITION DIVERTER VALVE - NORMALLY CLOSED

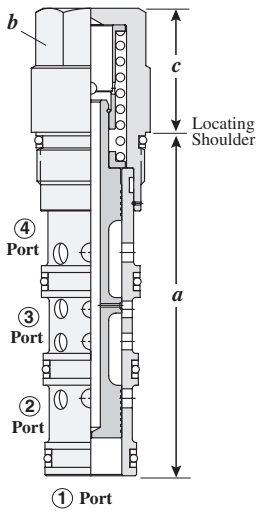

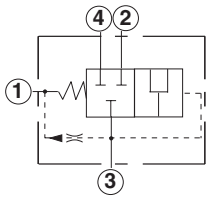

Capacity	Typical Cartridge Model Code	Cavity	Cartridge Dimensions a	b	c	Installation Torque (Nm)
60 L/min.	**DSCX – XEN**	T - 31A	84,8	22,2	30.2	40/50
120 L/min.	**DSEX – XEN**	T - 32A	92,2	28,6	33,3	60/70
240 L/min.	**DSGX – XEN**	T - 33A	114,6	31,8	41,4	200/215
480 L/min.	**DSIX – XEN**	T - 34A	139,7	41,3	53,8	465/500

Performance Curves

DSCX **DSEX** **DSGX** **DSIX**

Typical Pressure Drop

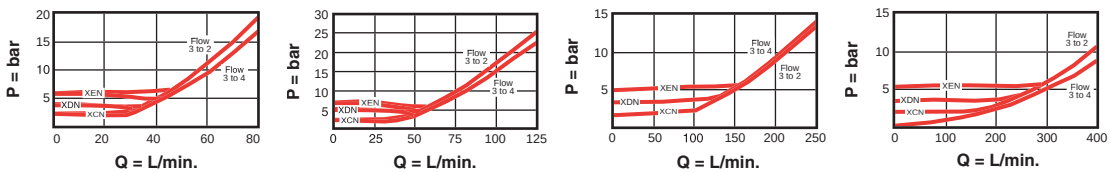

- Maximum operating pressure = 350 bar
- Nominal vent flow = DSCX, DSEX: 0,38 L/min., DSGX, DSIX: 0,60 L/min.
- There must be a pressure source at port 3, relative to port 1, to shift the valve.

OPTION ORDERING INFORMATION **Model Codes printed in Red are Preferred Versions and most readily available**

DS ✶ X – X E ✶

Nominal Capacity		*Control*	*Minimum Control Pressure*		*Seal*	
C	60 L/min.	**X**	Non-adjustable	**C**	2 bar	**N** Buna-N
E	120 L/min.			**D**	3,5 bar	**V** Viton
G	240 L/min.			**E**	5 bar	
I	480 L/min.					

Customer may specify pressure setting.

Visit www.sunhydraulics.com for detailed and complete technical information on our full line of products.

VENT-TO-SHIFT, 2-POSITION, 3-WAY DIVERTER VALVE

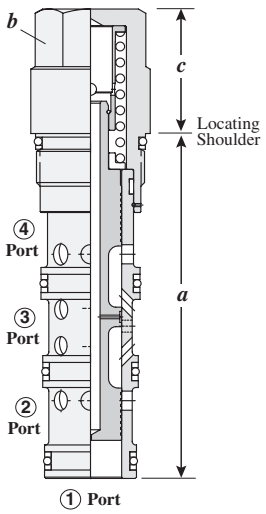

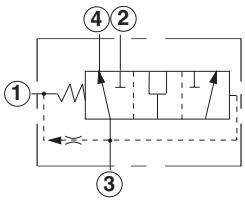

Capacity	Typical Cartridge Model Code	Cavity	Cartridge Dimensions a	b	c	Installation Torque (Nm)
60 L/min.	**DSCY – XEN**	T - 31A	84,8	22,2	30.2	40/50
120 L/min.	**DSEY – XEN**	T - 32A	92,2	28,6	33,3	60/70
240 L/min.	**DSGY – XEN**	T - 33A	114,6	31,8	41,4	200/215
480 L/min.	**DSIY – XEN**	T - 34A	139,7	41,3	53,8	465/500

Performance Curves

DSCY **DSEY** **DSGY** **DSIY**

Typical Pressure Drop

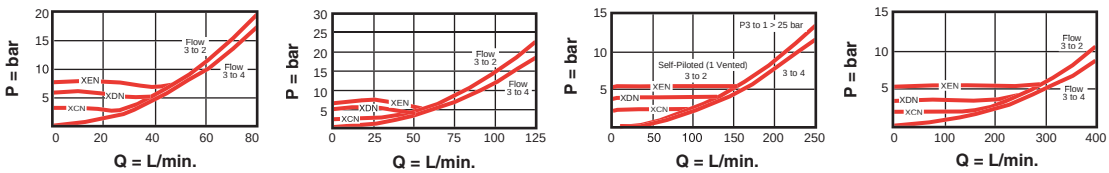

- Maximum operating pressure = 350 bar
- Nominal vent flow = DSCY, DSEY: 0,38 L/min., DSGY, DSIY: 0,60 L/min.
- There must be a pressure source at port 3, relative to port 1, to shift the valve.

OPTION ORDERING INFORMATION

Model Codes printed in Red are Preferred Versions and most readily available

DS ✶ Y – X E ✶

Nominal Capacity		*Control*		*Minimum Control Pressure*		*Seal*	
C	60 L/min.	**X**	Non-adjustable	**C**	2 bar	**N**	Buna-N
E	120 L/min.			**D**	3,5 bar	**V**	Viton
G	240 L/min.			**E**	5 bar		
I	480 L/min.						

Customer may specify pressure setting.

Visit www.sunhydraulics.com for detailed and complete technical information on our full line of products.

NORMALLY OPEN, BI-DIRECTIONAL, MODULATING LOGIC ELEMENT

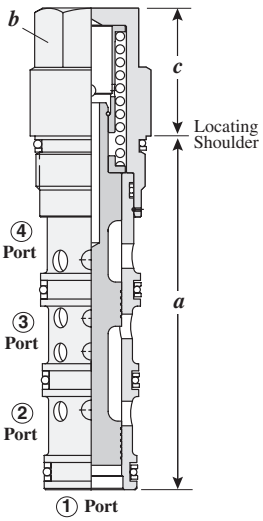

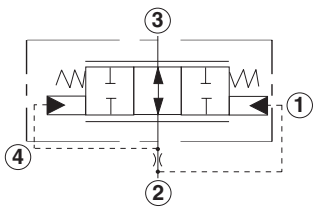

Capacity	Typical Cartridge Model Code	Cavity	Cartridge Dimensions a	b	c	Installation Torque (Nm)
60 L/min.	**LHDT – XFN**	T - 31A	84,8	22,2	30.2	40/50
120 L/min.	**LHFT – XFN**	T - 32A	92,2	28,6	33,3	60/70
240 L/min.	**LHHT – XFN**	T - 33A	114,3	31,8	41,3	200/215

Performance Curves

LHDT **LHFT** **LHHT**

Typical Performance Pressure Differential vs. Flow

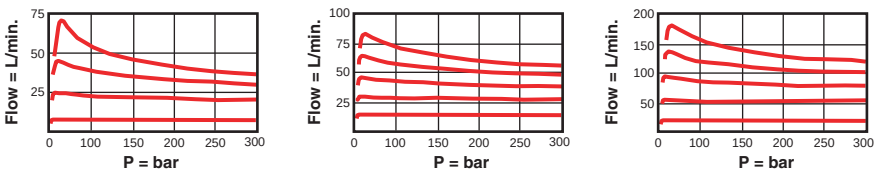

- Maximum operating pressure = 350 bar

OPTION ORDERING INFORMATION

Model Codes printed in Red are Preferred Versions and most readily available

LH ★ T – X F ★

Nominal Capacity		*Control*		*Nominal Control Pressure*		*Seal*	
D	60 L/min.	**X**	Non-adjustable	**D**	3,5 bar	**N**	Buna-N
F	120 L/min.			**E**	5 bar	**V**	Viton
H	240 L/min.			**F**	7 bar		

Customer may specify pressure setting.

Visit www.sunhydraulics.com for detailed and complete technical information on our full line of products.

Hybrid Relief Valves

	Cartridge Type	*Page*
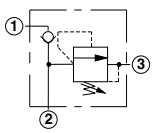	Direct Acting Relief Valve - Before Check	156
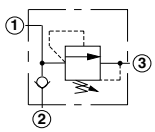	Direct Acting Relief Valve - After Check	157
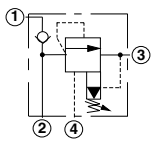	Ventable, Pilot Operated, Balanced Piston, Relief Valve - Before Check	158
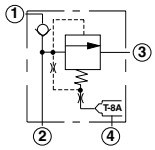	Ventable, Pilot Operated, Balanced Piston, Relief Valve - Before Check with Integral Pilot Control Cavity	159

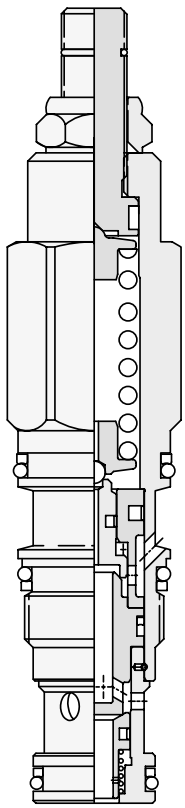

DIRECT ACTING RELIEF VALVE - BEFORE CHECK

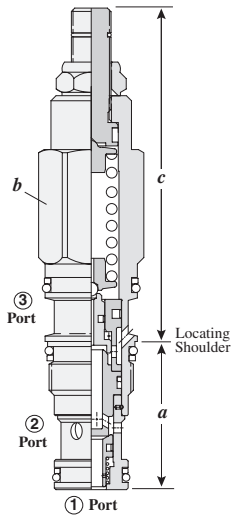

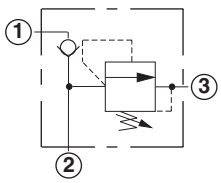

Capacity	Typical Cartridge Model Code	Cavity	Cartridge Dimensions a	b	c L	c C	c K	Installation Torque (Nm)
40 L/min.	**HRDA – LAN**	T - 11A	35,0	22,2	78,9	80,2	85,0	45/50

Performance Curves

HRDA

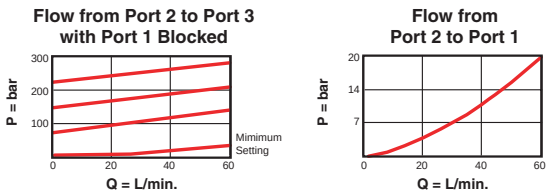

- Maximum operating pressure = 350 bar
- Maximum valve leakage at reseat = 0,3 cc/min.
- Reseat exceeds 85% of crack pressure
- Factory pressure setting established at 15 L/min.
- Free flow check cracking pressure = 1,7 bar
- Typical response = 2 ms
- The check portion of the valve has a maximum leakage rate of less than 0,07 cc/min.
- Note: This valve deviates from Sun's normal flow path for three port relief valves; port 2 is the inlet, port 1 is the system and port 3 is tank. Therefore, it is probably not useable in existing standard Sun relief manifolds.

OPTION ORDERING INFORMATION

Model Codes printed in Red are Preferred Versions and most readily available

HR D A – L A N

Nominal Capacity	*Control***	*Adjustment Range*	*Seal*
D 40 L/min.	**L** Standard Screw Adjustment	**A** 35 - 210 bar	**N** Buna-N
	C Tamper Resistant Factory Set	**W** 55 - 315 bar	**V** Viton
	K Handknob		

** *See page 162 for information on Control Options*

Customer may specify pressure setting.

Visit www.sunhydraulics.com for detailed and complete technical information on our full line of products.

DIRECT ACTING RELIEF VALVE - AFTER CHECK

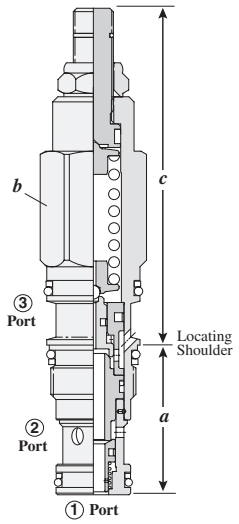

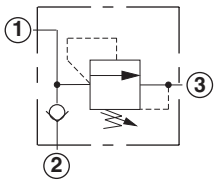

Capacity	*Typical Cartridge Model Code*	*Cavity*	*Cartridge Dimensions* *a*	*b*	*c* L	C	K	*Installation Torque (Nm)*
40 L/min.	**HRDB – LAN**	T - 11A	35,0	22,2	78,9	80,2	85,0	45/50

Performance Curves

HRDB

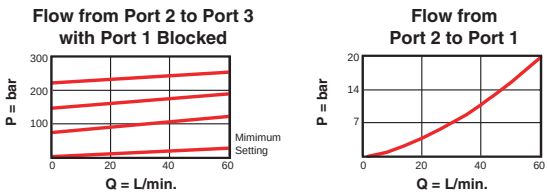

- Maximum operating pressure = 350 bar
- Maximum valve leakage at reseat = 0,3 cc/min.
- Reseat exceeds 85% of crack pressure
- Factory pressure setting established at 15 L/min.
- Free flow check cracking pressure = 1,7 bar
- Typical response = 2 ms
- The check portion of the valve has a maximum leakage rate of less than 0,07 cc/min.
- Note: This valve deviates from Sun's normal flow path for three port relief valves; port 2 is the inlet, port 1 is the system and port 3 is tank. Therefore, it is probably not useable in existing standard Sun relief manifolds.

OPTION ORDERING INFORMATION

Model Codes printed in Red are Preferred Versions and most readily available

HR D B – L A N

Nominal Capacity	*Control***	*Adjustment Range*	*Seal*
D 40 L/min.	**L** Standard Screw Adjustment	**A** 35 - 210 bar	**N** Buna-N
	C Tamper Resistant Factory Set	**W** 55 - 315 bar	**V** Viton
	K Handknob		

** *See page 162 for information on Control Options*

Customer may specify pressure setting.

Visit www.sunhydraulics.com for detailed and complete technical information on our full line of products.

VENTABLE, PILOT OPERATED, BALANCED PISTON, RELIEF VALVE - BEFORE CHECK

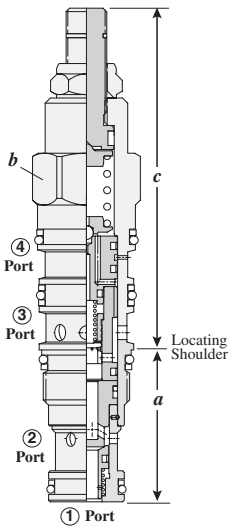

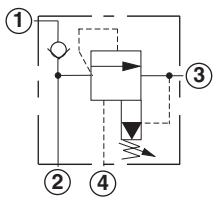

Capacity	Typical Cartridge Model Code	Cavity	Cartridge Dimensions a	b	c L	c C	c K	Installation Torque (Nm)
40 L/min.	**HVCA – LAN**	T - 21A	35,0	22,2	78,9	80,2	85,0	45/50

Performance Curves

HVCA

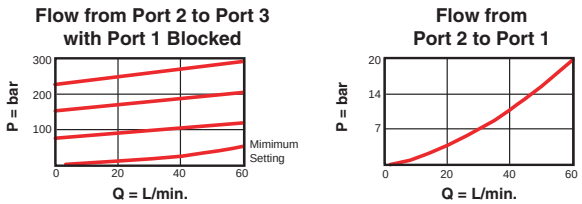

- Maximum operating pressure = 350 bar
- Maximum valve leakage (port 2 to port 3) = 32,8 cc/min. at 70 bar
- Factory pressure setting established at 15 L/min.
- Free flow check cracking pressure = 1,7 bar
- Typical response = 10 ms
- Minimum setting is 5 bar for all spring ranges.
- Back pressure at port 3 (tank) is directly additive to the valve setting at a 1:1 ratio.
- Pressure at port 4 (vent) controls the valve below its setting.
- The check portion of the valve has a maximum leakage rate of less than 0,07 cc/min.
- Note: This valve deviates from Sun's normal flow path for four port relief valves; port 2 is the inlet, port 1 is the system, port 3 is tank and port 4 is vent. Therefore, it is probably not useable in existing standard Sun relief manifolds.

OPTION ORDERING INFORMATION **Model Codes printed in Red are Preferred Versions and most readily available**

HV C A – L A N

Nominal Capacity	*Control***	*Adjustment Range*	*Seal*
C 40 L/min.	**L** Standard Screw Adjustment	**A** 5 - 210 bar	**N** Buna-N
		B 5 - 105 bar	**V** Viton
	C Tamper Resistant Factory Set	**D** 5 - 55 bar	
	K Handknob	**W** 5 - 315 bar	

** *See page 162 for information on Control Options*

Customer may specify pressure setting.

Visit www.sunhydraulics.com for detailed and complete technical information on our full line of products.

VENTABLE, PILOT OPERATED, BALANCED PISTON, RELIEF VALVE - BEFORE CHECK WITH INTEGRAL PILOT CONTROL CAVITY

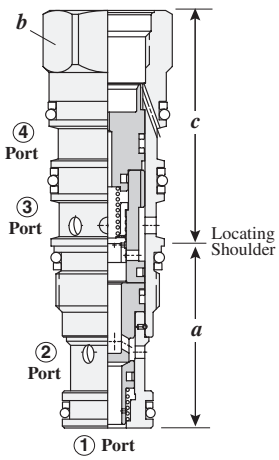

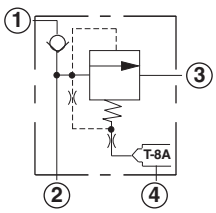

The -8 control option allows the pilot control valve to be incorporated directly into the end of the relief cartridge via the T-8A cavity. These pilot control cartridges are sold separately and include electro-proportional, solenoid, air pilot, and hydraulic pilot operation. See Pilot Control Cartridges on page 121.

Capacity	*Typical Cartridge Model Code*	*Cavity*	*Cartridge Dimensions*			*Installation Torque (Nm)*
			a	*b*	*c*	
40 L/min.	**HVCA – 8DN**	T - 21A	35,0	22,2	45,2	45/50

Performance Curves

HVCA-8

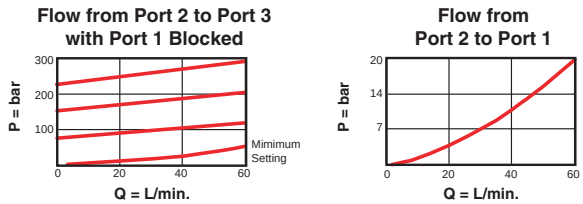

- Maximum operating pressure = 350 bar
- Maximum valve leakage (port 2 to port 3) = 32,8 cc/min. at 70 bar
- Free flow check cracking pressure = 1,7 bar
- Minimum setting is 5 bar for all spring ranges.
- Back pressure at port 4 (tank) is directly additive to the valve setting at a 1:1 ratio.
- The check portion of the valve has a maximum leakage rate of less than 0,07 cc/min.
- Note: This valve deviates from Sun's normal flow path for four port relief valves; port 2 is the inlet, port 1 is the system, port 3 is tank and port 4 is vent. Therefore, it is probably not useable in existing standard Sun relief manifolds.
- With the -8 control option, the main stage valve should first be installed to the correct torque value. The T-8A pilot control valve should then be installed into the main stage valve to its required torque value.

OPTION ORDERING INFORMATION

Model Codes printed in Red are Preferred Versions and most readily available

HV C A – 8 D N

Nominal Capacity	*Control*	*Adjustment Range*	*Seal*
C 40 L/min.	**8** with T-8A cavity in hex body for pilot operation (see pilot control section for alternate options)	**D** 5 bar	**N** Buna-N **V** Viton

Visit www.sunhydraulics.com for detailed and complete technical information on our full line of products.

NOTES

General Information

	Page	
Cartridge Control Options	162	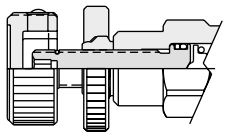
Cartridge Control Kits	163	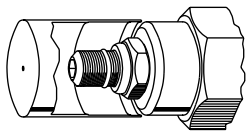
Cavity Plugs	165	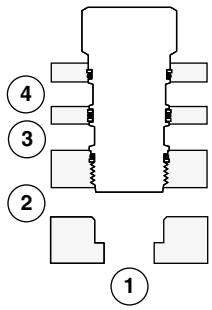
Solenoid Electrical Connector Options	167	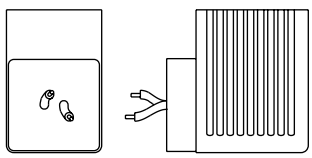
Orifice Pressure Drop Data	168	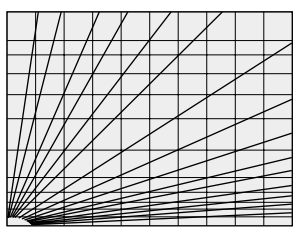

Cartridge Control Options

General Purpose Controls (for use in systems where adjustment may be changed after installation.)

L Standard Screw Adjustment

O-ring seal on adjust screw. Adjust screw positively retained. Overset protection-pilot spring cannot go solid.

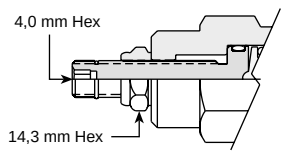

K Handknob with Lock Knob

Handknob and lock knob added to **L** control. Sun handknob kits for field conversion are available.

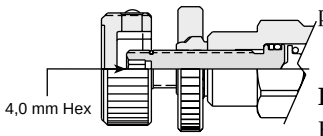

O Handknob with Panel Mount

Special threaded cartridge hex body with panel nut for mounting cartridge through access hole in control panel. Handknob and lock knob included.

Panel Hole:

Series 1 cartridges 190 mm dia.
Series 2 cartridges 25,4 mm dia.

Panel nut hex size identical to cartridge hex size.

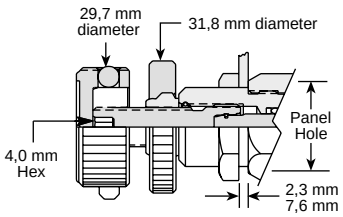

C Tamper Resistant Factory Set

Cover press-fit onto **L** control cartridge shoulder. Valves may be ordered in this configuration from Sun. ***Specify pressure setting on order.*** Setting stamped on cartridge hex. Sun kits for field conversion are available.

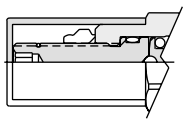

Key Lock Kit

Optional adjustment Key Lock Cover Kit for **L** controls allows adjustment to be locked with a key to prevent unauthorized changes in valve setting. Adjustment is easily accessible when lock assembly is removed. Requires replacement of standard locknut with special locknut which accepts lock assembly, and a new wire stop ring for overset protection.

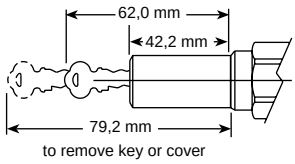

H Calibrated Handknob with Detent Lock

Fully calibrated handknob for flow control cartridges. 40 radial calibrations per turn. Moveable zero indicator. (Minor disassembly required.) Rising detented locking collar positively locks adjustment knob against vibration or accidental tampering. Any desired setting may be recorded and repeated. U.S. Patent #4,577,831.

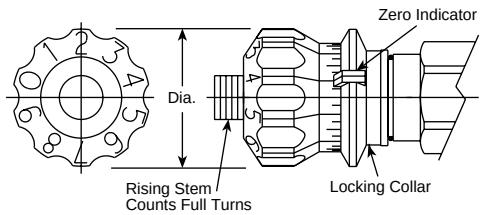

Diameter	*28,7 mm*	*35,1 mm*	*41,1 mm*	*41,1 mm*
Series	1	2	3	4
	NCCB	NCEB	NCFB	NCGB
	NCCC	NCEC	NCFC	NCGC
	NFCC	NFDC	NFEC	NFFC
	NFCD	NFDD	NFED	NFFD
	FDBA	FDCB	FDEA	FDFA

Special Purpose Controls (for use in systems where adjustment is seldom changed after installation)

J Socket Head Set Screw with Cap

Stem seal - Seal under locknut. Adjustment screw not retained. No overset protection.

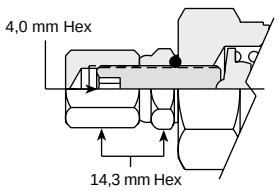

F Wrench Adjustment

Stem seal - Seal under locknut. Adjusting screw is not retained. Overset protection-pilot spring cannot go solid.

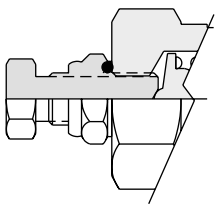

Counterbalance Cartridge Controls

All Sun counterbalance cartridges are built with a leakproof adjustment - O-ring seals are on the adjusting screw-but are not designed for frequent adjustment in the field. Cartridges that are factory pre-set by Sun to a customer specified pressure setting are available and can be installed directly on a machine without the need for further adjustment.

C Tamper Resistant Factory Set

See **"C"** Control description above.

L Standard Leakproof Screw Adjustment.

O-ring seal on adjust screw.

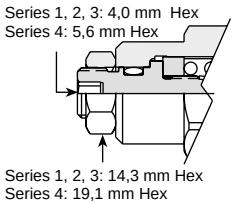

Visit www.sunhydraulics.com for detailed and complete technical information on our full line of products.

Cartridge Control Kits

Service Kit Number Description	*Use specifically with Control/Cartridge*	*Description*	*Notes*
Adjustment Screw Kit **991-006** Adjustment Screw Kit **991-010**	All **F** controls All **J** controls	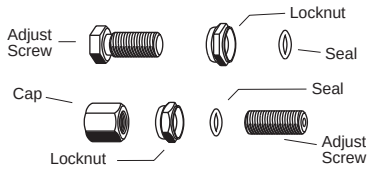	To assure a complete seal on the stem - release all pressure on the cartridge after setting. **Then...** tighten locknut (and cap, on **J**).
Tamper Resistant Cover **991-000** **991-004** **991-001** **991-002** **991-003** **991-032** **991-033**	For all Sun cartridges with **L** adjustment Series 0 -hex 19,0 mm Series 1 - 22,2 mm hex Series 2 - 28,6 mm hex Series 3 - 31,8 mm hex Series 4 - 41,0 mm hex Series 1 - 22,2 mm hex (CB**, CC**) Series 2 - 28,6 mm hex (CB**, CC**)	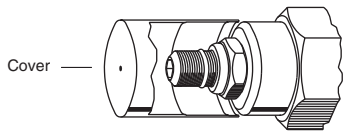	1. Adjust valve to desired setting and tighten locknut. 2. Using an arbor press or a soft hammer, install cover until it seats on cartridge hex. 3. Cover is a press fit on cartridge shoulder.
Key Lock Kit **993-008**	For all Sun cartridges with **L** adjustment (except Series 0 and counterbalance cartridges).	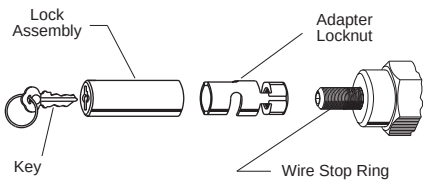	1. Remove original wire stop ring and locknut. 2. Thread on the adapter locknut and install new wire stop ring through slot provided. 3. Adjust valve to desired setting and tighten adapter locknut. 4. Slide lock assembly over adapter, lock and remove key.
Three-winged Handknob Kit **991-034**	For all Series 1, 2, 3, 4 valves with **L** or **O** adjustment except counterbalance cartridges.	Install while cartridge is screwed in cavity to prevent damage. 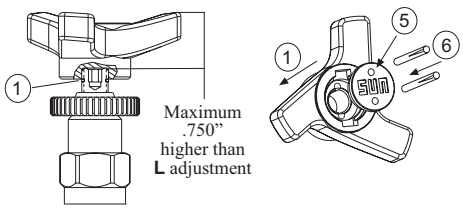	1. Do not remove stop ring. 2. Install lock knob by snapping onto the locknut. 3. Install star knob until contact is made with the stop ring. 4. Caution during installation on flow control valves (that have no stop ring). Make sure valve can be shut with hand knob installed. 5. Insert pins in cover so that they project on backside. 6. Put cover on with inserted pins and drive pins in until flush with cover.
	The handknob can be used as a Maximum Setting Limiter.	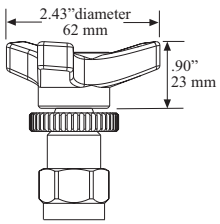	When knob is used as a maximum Setting Limiter: 1. Set valve at desired maximum setting. 2. Tighten lock nut (110 lbs. inch). 3. Remove stop ring. 4. Install lock knob. 5. Install handknob until flush with the lock knob.
Three-winged Handknob Kit with 1 3/8" dia. aluminum lock knob. **991-039**	This kit should be used in applications where there is high vibration and a plastic lock knob may loosen.	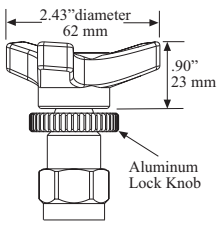	Follow installation instructions described above.

Cartridge Control Kits continue on next page

Visit www.sunhydraulics.com for detailed and complete technical information on our full line of products.

Cartridge Control Kits

Service Kit Number Description	*Use specifically with Control/Cartridge*	*Description*	*Notes*
K Handknob Kit **991-211**	Use this kit to adapt all **L** controls to **K** controls (except Series 0 and counterbalance cartridges).		Only cartridges date stamped "41" or later and originally supplied with plastic knobs. Lock knob snaps onto locknut furnished on cartridge.
991-222	**K** control for Series 0		
Panel Handknob Kit **991-215**	**O** controls All Series 1 cartridges 22,2 mm hex M20 thread		
Panel Handknob Kit **991-216**	**O** controls All Series 2 cartridges 28,6 mm hex 1"-14 thread	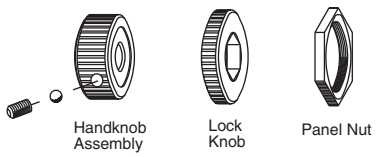	
H Calibrated Handknob Kit	**H** controls All series of flow controls		Only for cartridges originally supplied with an **H** handknob. Valves can not be modified in the field. **Note:** The **H** control is **Only** available for the cartridges shown to the left.
991-219	**FDCB**, **NCEB**, **NCEC**, **NFDC, NFDD** only	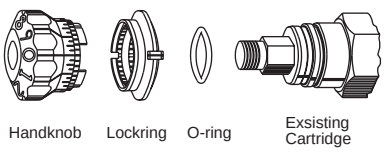	
991-220	**FDEA**, **FDFA**, **NCFB**, **NCFC**, **NCGB**, **NCGC**, **NFEC**, **NFED, NFFC, NFFD** only		
991-221	**FDBA**, **NCCB**, **NCCC**, **NFCC, NFDC** only		
Lockwire Kit **991-012**	All **M**, **Q** and **R** controls (except solenoid operated cartridges).		
Adjustment Screw Kit **991-112-003 Viton** **991-112-007 Buna-N**	**CKCA L**CKCD L**** **CKCB L**CPCA L**** **CKCC L****	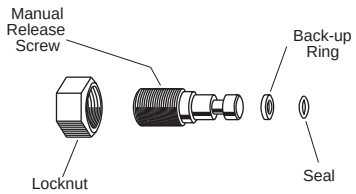	**Only** cartridges date stamped "62" or earlier.
Adjustment Screw Kit **991-212-003 Viton** **991-212-007 Buna-N**	**CKEA L**CKED L**** **CKEB L**CPEA L**** **CKEC L****		

Cavity Plugs

It is sometimes desirable to remove a Sun cartridge valve and still maintain the integrity of the hydraulic system. This may be necessitated by the need to flush a system after repairs or a piping change, or to change an operating function in the circuit. For these requirements, Sun offers two styles of cavity plugs - all ports blocked and main ports open to flow.

Plugs for Two Port Cavities:

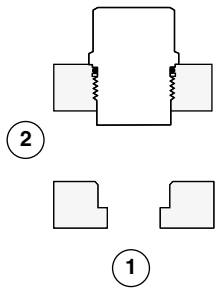

		All Ports Open			All Ports Blocked		
Series	*Cavity*	*Cavity Plug Model Code**	*Buna-N*	*Viton*	*Cavity Plug Model Code*	*Buna-N*	*Viton*
P	T-8A	XAOA-XX*			XACA-XX*		
0	T-162A	XZOA-XX*			XZCB-XX*		
1	T-10A	XFOA-XX*			XFCA-XX*		
	T-13A				XGCA-XX*		
2	T-3A	XCOA-XX*			XCCA-XX*		
	T-5A				XDCA-XX*		
3	T-16A	XIOA-XX*			XICA-XX*		
4	T-18A	XKOA-XX*			XKCA-XX*		

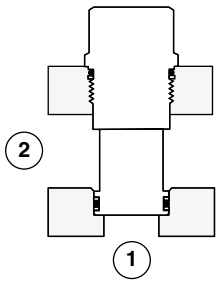

Plugs for Three Port Cavities

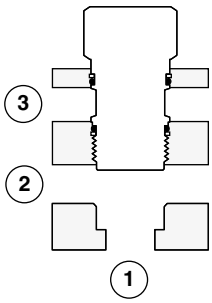

		Ports 1 to 2 Open Port 3 Blocked			All Ports Blocked		
Series	*Cavity*	*Cavity Plug Model Code**	*Buna-N*	*Viton*	*Cavity Plug Model Code*	*Buna-N*	*Viton*
P	T-9A	XAOB-XX*			XACBXX*		
0	T-163A	XZOB-XX*			XZCB-XX*		
1	T-11A	XEOA-XX*			XECA-XX*		
2	T-2A	XBOA-XX*			XBCA-XX*		
3	T-17A	XHOA-XX*			XHCA-XX*		
4	T-19A	XJOA-XX*			XJCA-XX*		

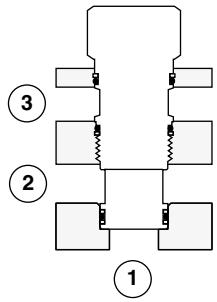

Plugs for Four Port Cavities (Internal Locating Shoulder)

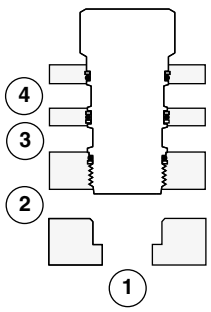

		Ports 1 to 2 Open Port 3 and 4 Blocked			All Ports Blocked		
Series	*Cavity*	*Cavity Plug Model Code**	*Buna-N*	*Viton*	*Cavity Plug Model Code*	*Buna-N*	*Viton*
1	T-21A	XMOA-XX*			XMCA-XX*		
2	T-22A	XNOA-XX*			XNCA-XX*		
3	T-23A	XPOA-XX*			XPCA-XX*		
4	T-24A	XQOA-XX*			XQCA-XX*		

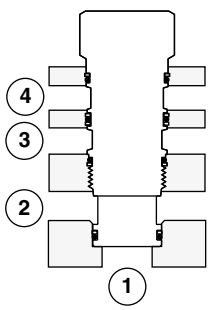

*Insert in the seventh position model code digit N to order Buna-N seals or V to order Viton seals.

Visit www.sunhydraulics.com for detailed and complete technical information on our full line of products.

Plugs for Four Port Cavities (External Locating Shoulder)

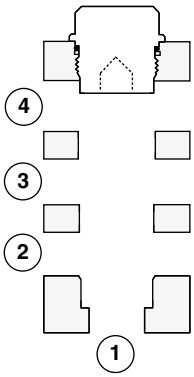

		All Ports Open			All Ports Blocked		
Series	*Cavity*	*Cavity Plug Model Code**	*Buna-N*	*Viton*	*Cavity Plug Model Code**	*Buna-N*	*Viton*
1	T-31A	XFOA-XX*			XRCA-XX*		
2	T-32A	XCOA-XX*			XSCA-XX*		
3	T-33A	XIOA-XX*			XTCA-XX*		
4	T-34A	XKOA-XX*			XVCA-XX*		

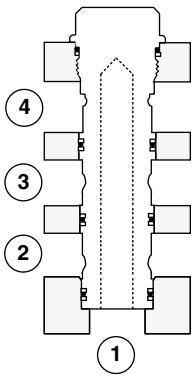

Plugs for Six Port Cavities

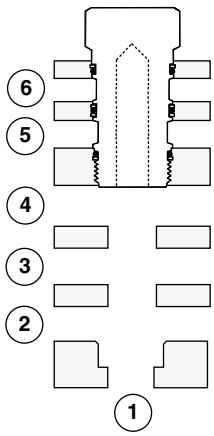

		Ports 1, 2, 3 and 4 Open Ports 5 and 6 Blocked			All Ports Blocked		
Series	*Cavity*	*Cavity Plug Model Code**	*Buna-N*	*Viton*	*Cavity Plug Model Code**	*Buna-N*	*Viton*
1	T-61A	XMOA-XX*			XRCC-XX*		
2	T-62A	XNOA-XX*			XSCC-XX*		
3	T-63A	XPOA-XX*			XTCC-XX*		
4	T-64A	XQOA-XX*			XVCC-XX*		

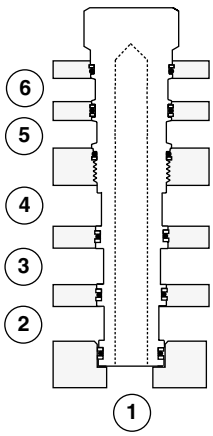

Cavity Adaptor (Converts Waterman 12-2 Cavity to the Sun T-8A Cavity)

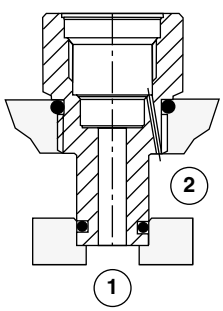

	All Ports Open		
Cavity	*Cavity Plug Model Code**	*Buna-N*	*Viton*
12-2	XAAA-8X*		

*Insert in the seventh position model code digit N to order Buna-N seals or V to order Viton seals.

Visit www.sunhydraulics.com for detailed and complete technical information on our full line of products.

Sun Solenoid Electrical Connector Options

Sun Hydraulics has a range of pilot flow and full flow solenoid products with operating pressures up to 350 bar. These products are available with the coil configuration options shown below. If you only require pilot flow and want to operate these packages in a 350 bar system, Sun offers a screw-in adapter that converts the Waterman 12-2 cavity to a Sun T-8A cavity.

Connector Options for Sun Pilot Flow Solenoid Valves (DAAA, DBAA)

ISO / DIN 43650 | **SAE J858-A** | **Twin Lead**

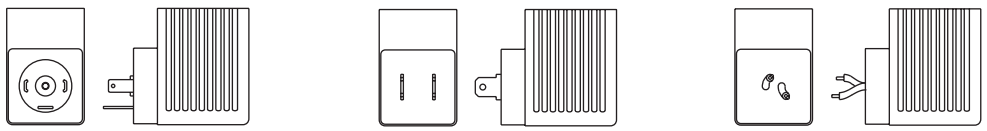

Description	*Coil only part number*	*Coil only part number*	*Coil only part number*
115 V AC 50/60 Hz	760-211	N/A	N/A
230 V AC 50/60 Hz	760-223	N/A	N/A
6 V DC	760-206	760-506	760-706
12 V DC	760-212	760-512	760-712
24 V DC	760-224	760-524	760-724
28 V DC	760-228	760-528	760-728
36 V DC	760-236	760-536	760-736
48 V DC	760-248	760-548	760-748

Connector Options for Sun Full Flow Solenoid Valves (DLDA, DTDA, DMDA, DNDA) and Proportional Valves (RBAP, PRDP, PRDL)

ISO/DIN 43650 | **Twin Spade (SAE J858A)** | **AMP® Junior Timer** | **Twin Lead** | **Metri-Pack** | **Deutsch**

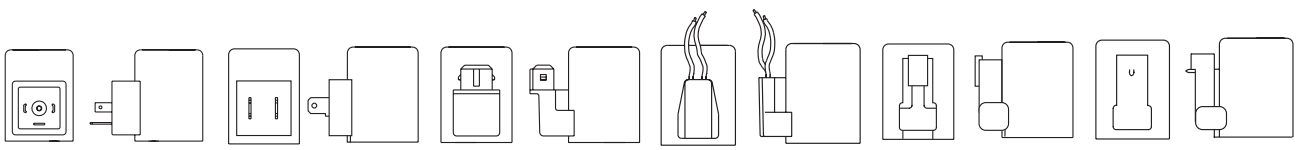

Description	*Coil only part number*	*Coil only part number*	*Coil only part number*	*Coil only part number*	*Coil only part number*	*Coil only part number*
115 V AC 50/60 Hz	770-211	N/A	N/A	N/A	N/A	N/A
230 V AC 50/60 Hz	770-223	N/A	N/A	N/A	N/A	N/A
12 V DC	770-212	770-512	770-612	770-712	770-812	770-912
24 V DC	770-224	770-524	770-624	770-724	770-824	770-924
48VDC	770-248	770-548	770-648	770-748	770-848	770-948

Visit www.sunhydraulics.com for detailed and complete technical information on our full line of products.

ORIFICE PRESSURE DROP DATA

No allowance has been made for viscosity effects, or regain of pressure downstream.

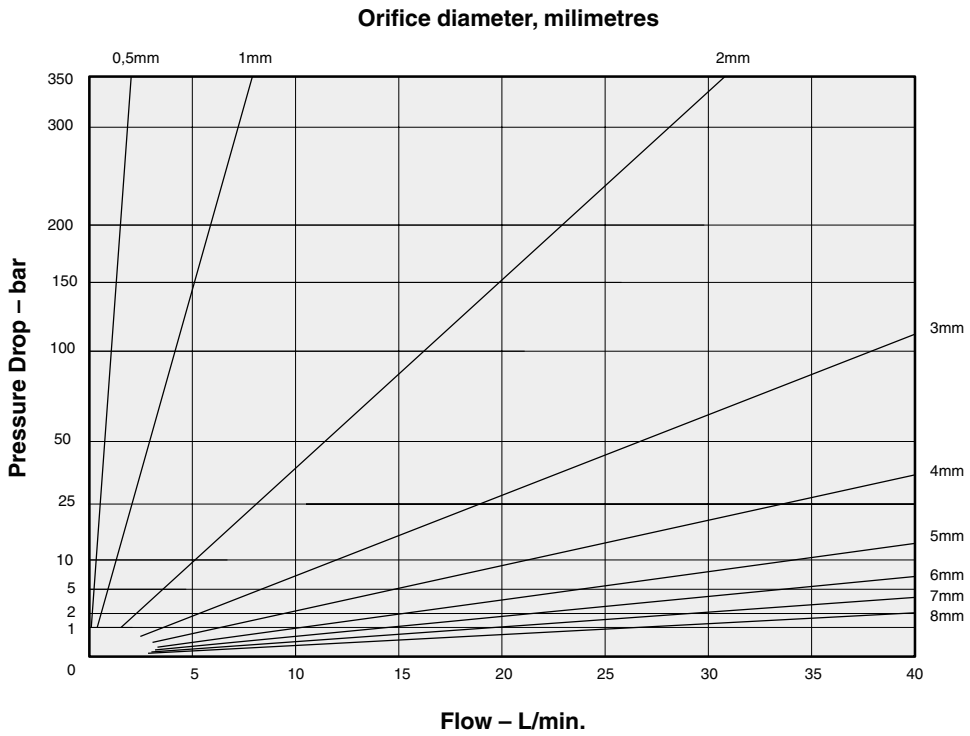

These charts are based on the formula:

$$Q = \alpha A\sqrt{\frac{2AP}{\rho}}$$

Where:

Q = Flow m^3/sec.
α = orifice coefficient
A = orifice dia. cm^2
ΔP = pressure drop N/m^2
ρ = density Ns^2/m^4

This equation becomes:

Q (l,min) = 0.4212 x d^2 (mm) $\sqrt{\text{pressure drop}}$ (bar)
when c = 0.6
ρ = 0.9 g/cm^3

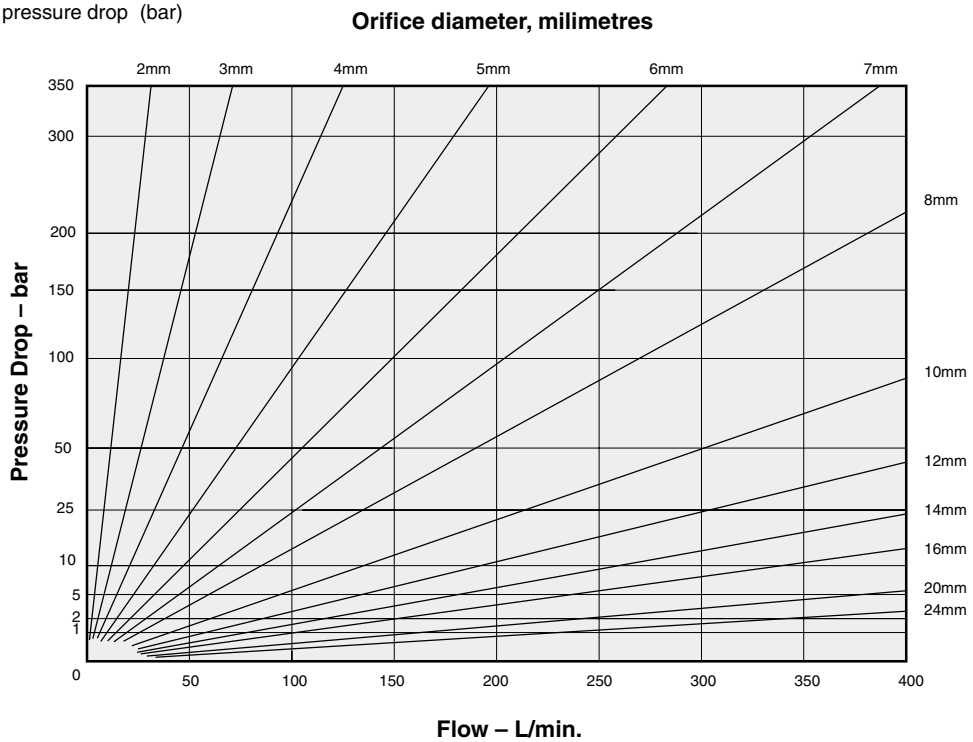

Model Code Index

Model Code	Cavity	Page	Model Code	Cavity	Page	Model Code	Cavity	Page
CACA - ✶✶✶	T-11A	55	CBGL - ✶✶✶	T-17A	49	COJA - ✶✶✶	T-19A	147
CACG - ✶✶✶	T-11A	55	CBGY - ✶✶✶	T-17A	48	CSAA - ✶✶✶	T-13A	136
CACK - ✶✶✶	T-11A	55	CBHA - ✶✶✶	T-19A	53	CSAB - ✶✶✶	T-11A	137
CACL - ✶✶✶	T-11A	55	CBHG - ✶✶✶	T-19A	53	CSAC - ✶✶✶	T-13A	136
CAEA - ✶✶✶	T-2A	55	CBIA - ✶✶✶	T-19A	48	CSAD - ✶✶✶	T-11A	137
CAEG - ✶✶✶	T-2A	55	CBIB - ✶✶✶	T-19A	48	CSAW - ✶✶✶	T-162A	136
CAEK - ✶✶✶	T-2A	55	CBIG - ✶✶✶	T-19A	49	CSAX - ✶✶✶	T-163A	137
CAEL - ✶✶✶	T-2A	55	CBIH - ✶✶✶	T-19A	49	CSAY - ✶✶✶	T-162A	136
CAGA - ✶✶✶	T-17A	55	CBIL - ✶✶✶	T-19A	49	CSAZ - ✶✶✶	T-163A	137
CAGG - ✶✶✶	T-17A	55	CBIY - ✶✶✶	T-19A	48	CVCV - ✶✶✶	T-21A	46
CAGK - ✶✶✶	T-17A	55	CCCA - ✶✶✶	T-11A	54	CVEV - ✶✶✶	T-22A	46
CAGL - ✶✶✶	T-17A	55	CCEA - ✶✶✶	T-2A	54	CVGV - ✶✶✶	T-23A	46
CAIA - ✶✶✶	T-19A	55	CCGA - ✶✶✶	T-17A	54	CVIV - ✶✶✶	T-24A	46
CAIG - ✶✶✶	T-19A	55	CCIA - ✶✶✶	T-19A	54	CWCA- ✶✶✶	T-21A	56
CAIK - ✶✶✶	T-19A	55	CDAA - ✶✶✶	T-13A	138	CWCG- ✶✶✶	T-21A	57
CAIL - ✶✶✶	T-19A	55	CDAB - ✶✶✶	T-11A	139	CWCK- ✶✶✶	T-21A	56
CBBA - ✶✶✶	T-11A	52	CDAC - ✶✶✶	T-13A	138	CWCL - ✶✶✶	T-21A	57
CBBB - ✶✶✶	T-11A	50	CDAD - ✶✶✶	T-11A	139	CWEA - ✶✶✶	T-22A	56
CBBC - ✶✶✶	T-11A	50	CKBB - ✶✶✶	T-163A	44	CWEG- ✶✶✶	T-22A	57
CBBD - ✶✶✶	T-11A	51	CKBD - ✶✶✶	T-163A	44	CWEK - ✶✶✶	T-22A	56
CBBG - ✶✶✶	T-11A	53	CKCB - ✶✶✶	T-11A	44	CWEL - ✶✶✶	T-22A	57
CBBL - ✶✶✶	T-11A	51	CKCD - ✶✶✶	T-11A	44	CWGA- ✶✶✶	T-23A	56
CBBY - ✶✶✶	T-11A	52	CKCV - ✶✶✶	T-11A	45	CWGG- ✶✶✶	T-23A	57
CBCA - ✶✶✶	T-11A	48	CKEB - ✶✶✶	T-2A	44	CWGK- ✶✶✶	T-23A	56
CBCB - ✶✶✶	T-11A	48	CKED - ✶✶✶	T-2A	44	CWGL - ✶✶✶	T-23A	57
CBCG - ✶✶✶	T-11A	49	CKEV - ✶✶✶	T-2A	45	CWIA - ✶✶✶	T-24A	56
CBCH - ✶✶✶	T-11A	49	CKGB - ✶✶✶	T-17A	44	CWIG - ✶✶✶	T-24A	57
CBCL - ✶✶✶	T-11A	49	CKGD - ✶✶✶	T-17A	44	CWIK - ✶✶✶	T-24A	56
CBCY - ✶✶✶	T-11A	48	CKGV - ✶✶✶	T-17A	45	CWIL - ✶✶✶	T-24A	57
CBDA - ✶✶✶	T-2A	52	CKIB - ✶✶✶	T-19A	44	CXAD - ✶✶✶	T-162A	61
CBDB - ✶✶✶	T-2A	50	CKID - ✶✶✶	T-19A	44	CXBA - ✶✶✶	T-162A	60
CBDC - ✶✶✶	T-2A	50	CKIV - ✶✶✶	T-19A	45	CXCD - ✶✶✶	T-13A	61
CBDD - ✶✶✶	T-2A	51	CNAC - ✶✶✶	T-162A	72	CXCE - ✶✶✶	T-11A	62
CBDG - ✶✶✶	T-2A	53	CNBC - ✶✶✶	T-162A	63	CXDA - ✶✶✶	T-13A	60
CBDL - ✶✶✶	T-2A	51	CNCC - ✶✶✶	T-13A	72	CXED - ✶✶✶	T-5A	61
CBEA - ✶✶✶	T-2A	48	CNCD - ✶✶✶	T-11A	64	CXEE - ✶✶✶	T-2A	62
CBEB - ✶✶✶	T-2A	48	CNDC - ✶✶✶	T-13A	63	CXFA - ✶✶✶	T-5A	60
CBEG - ✶✶✶	T-2A	49	CNEC - ✶✶✶	T-5A	72	CXGD - ✶✶✶	T-16A	61
CBEH - ✶✶✶	T-2A	49	CNED - ✶✶✶	T-2A	64	CXGE - ✶✶✶	T-17A	62
CBEL - ✶✶✶	T-2A	49	CNFC - ✶✶✶	T-5A	63	CXHA - ✶✶✶	T-16A	60
CBEY - ✶✶✶	T-2A	48	CNGC - ✶✶✶	T-16A	72	CXID - ✶✶✶	T-18A	61
CBFA - ✶✶✶	T-17A	52	CNGD - ✶✶✶	T-17A	64	CXIE - ✶✶✶	T-19A	62
CBFB - ✶✶✶	T-17A	50	CNHC - ✶✶✶	T-16A	63	CXJA - ✶✶✶	T-18A	60
CBFC - ✶✶✶	T-17A	50	CNIC - ✶✶✶	T-18A	72	DAAA - ✶✶✶	T-8A	118
CBFD - ✶✶✶	T-17A	51	CNID - ✶✶✶	T-19A	64	DAAA - ✶✶✶	T-8A	122
CBFG - ✶✶✶	T-17A	53	CNJC - ✶✶✶	T-18A	63	DAAC - ✶✶✶	T-8A	118
CBFL - ✶✶✶	T-17A	51	COBA - ✶✶✶	T-163A	147	DAAC - ✶✶✶	T-8A	122
CBGA - ✶✶✶	T-17A	48	CODA - ✶✶✶	T-11A	147	DAAH - ✶✶✶	T-8A	123
CBGB - ✶✶✶	T-17A	48	COFA - ✶✶✶	T-2A	147	DAAP - ✶✶✶	T-8A	124
CBGG - ✶✶✶	T-17A	49	COFO - ✶✶✶	T-2A	146	DAAM - ✶✶✶	T-8A	125
CBGH - ✶✶✶	T-17A	49	COHA - ✶✶✶	T-17A	147	DBAA - ✶✶✶	T-9A	119

Model Code Index

Model Code	Cavity	Page	Model Code	Cavity	Page	Model Code	Cavity	Page
DBAA - ✶✶✶	T-9A	126	DOJP - ✶✶✶	T-24A	96	DVBM - 8✶✶	T-21A	107
DBAC - ✶✶✶	T-9A	119	DOJR - ✶✶✶	T-24A	94	DVBN - 8✶✶	T-21A	107
DBAC - ✶✶✶	T-9A	126	DOJR - 8✶✶	T-24A	95	DVBO - 8✶✶	T-21A	107
DBAH - ✶✶✶	T-9A	127	DOJS - ✶✶✶	T-24A	93	DVBP - 8✶✶	T-21A	107
DBAM - ✶✶✶	T-9	122	DPBA - ✶✶✶	T-11A	102	FCBB - ✶✶✶	T-162A	70
DBAP - ✶✶✶	T-9A	128	DPBB - ✶✶✶	T-11A	102	FCCB - ✶✶✶	T-13A	70
DCCC - ✶✶✶	T-61A	110	DPBC - ✶✶✶	T-11A	102	FCDB - ✶✶✶	T-5A	70
DCCD - ✶✶✶	T-61A	111	DPBD - ✶✶✶	T-11A	102	FCEB - ✶✶✶	T-16A	70
DCDC - ✶✶✶	T-62A	110	DPBM - ✶✶✶	T-21A	103	FCFB - ✶✶✶	T-18A	70
DCDD - ✶✶✶	T-62A	111	DPBN - ✶✶✶	T-21A	103	FDBA - ✶✶✶	T-13A	71
DCEC - ✶✶✶	T-63A	110	DPBO - ✶✶✶	T-21A	103	FDCB - ✶✶✶	T-5A	71
DCED - ✶✶✶	T-63A	111	DPBP - ✶✶✶	T-21A	103	FDEA - ✶✶✶	T-16A	71
DCFC - ✶✶✶	T-64A	110	DPCA - ✶✶✶	T-2A	102	FDFA - ✶✶✶	T-18A	71
DCFD - ✶✶✶	T-64A	111	DPCB - ✶✶✶	T-2A	102	FPCC - ✶✶✶	T-13A	73
DFCA - 8✶✶	T-13A	108	DPCC - ✶✶✶	T-2A	102	FPCH - ✶✶✶	T-13A	74
DFCB - 8✶✶	T-13A	109	DPCD - ✶✶✶	T-2A	102	FQCA - ✶✶✶	T-13A	144
DFDA - 8✶✶	T-5A	108	DPCM - ✶✶✶	T-22A	103	FQEA - ✶✶✶	T-5A	144
DFDB - 8✶✶	T-5A	109	DPCN - ✶✶✶	T-22A	103	FQGA - ✶✶✶	T-16A	144
DFEA - 8✶✶	T-16A	108	DPCO - ✶✶✶	T-22A	103	FQIA - ✶✶✶	T-18A	144
DFEB - 8✶✶	T-16A	109	DPCP - ✶✶✶	T-22A	103	FRBA - ✶✶✶	T-163A	76
DFFA - 8✶✶	T-18A	108	DRAX - ✶✶✶	T-21A	150	FRCA - ✶✶✶	T-11A	76
DKDP - ✶✶✶	T-21A	98	DRAY - ✶✶✶	T-21A	151	FRDA - ✶✶✶	T-2A	76
DKDR - ✶✶✶	T-21A	99	DRBA - ✶✶✶	T-11A	104	FREA - ✶✶✶	T-17A	76
DKDR - 8✶✶	T-21A	100	DRBB - ✶✶✶	T-11A	104	FRFA - ✶✶✶	T-19A	76
DKDS - ✶✶✶	T-21A	97	DRBC - ✶✶✶	T-11A	104	FSBA - ✶✶✶	T-31A	83
DKFP - ✶✶✶	T-22A	98	DRBD - ✶✶✶	T-11A	104	FSBD - ✶✶✶	T-31A	82
DKFR - ✶✶✶	T-22A	99	DRBR - ✶✶✶	T-21A	105	FSBS - ✶✶✶	T-31A	84
DKFR - 8✶✶	T-22A	100	DSCH - ✶✶✶	T-31A	140	FSCA - ✶✶✶	T-31A	83
DKFS - ✶✶✶	T-22A	97	DSCO - ✶✶✶	T-31A	142	FSCD - ✶✶✶	T-31A	82
DKHP - ✶✶✶	T-23A	98	DSCS - ✶✶✶	T-31A	141	FSCH - ✶✶✶	T-31A	85
DKHR - ✶✶✶	T-23A	99	DSCX - ✶✶✶	T-31A	152	FSCS - ✶✶✶	T-31A	84
DKHR - 8✶✶	T-23A	100	DSCY - ✶✶✶	T-31A	153	FSDA - ✶✶✶	T-32A	83
DKHS - ✶✶✶	T-23A	97	DSEH - ✶✶✶	T-32A	140	FSDD - ✶✶✶	T-32A	82
DKJP - ✶✶✶	T-24A	98	DSEO - ✶✶✶	T-32A	142	FSDH - ✶✶✶	T-32A	85
DKJR - ✶✶✶	T-24A	99	DSES - ✶✶✶	T-32A	141	FSDS - ✶✶✶	T-32A	84
DKJR - 8✶✶	T-24A	100	DSEX - ✶✶✶	T-32A	152	FSEA - ✶✶✶	T-33A	83
DKJS - ✶✶✶	T-24A	97	DSEY - ✶✶✶	T-32A	153	FSED - ✶✶✶	T-33A	82
DLDA - ✶✶✶	T-13A	114	DSGH - ✶✶✶	T-33A	140	FSEH - ✶✶✶	T-33A	85
DMDA - ✶✶✶	T-11A	116	DSGO - ✶✶✶	T-33A	142	FSES - ✶✶✶	T-33A	84
DNDA - ✶✶✶	T-31A	117	DSGS - ✶✶✶	T-33A	141	FSFA - ✶✶✶	T-34A	83
DODP - ✶✶✶	T-21A	96	DSGX - ✶✶✶	T-33A	152	FSFD - ✶✶✶	T-34A	82
DODR - ✶✶✶	T-21A	94	DSGY - ✶✶✶	T-33A	153	FSFH - ✶✶✶	T-34A	85
DODR - 8✶✶	T-21A	95	DSIH - ✶✶✶	T-34A	140	FSFS - ✶✶✶	T-34A	84
DODS - ✶✶✶	T-21A	93	DSIO - ✶✶✶	T-34A	142	FVCA - ✶✶✶	T-21A	77
DOFP - ✶✶✶	T-22A	96	DSIS - ✶✶✶	T-34A	141	FVCA - 8✶✶	T-21A	78
DOFR - ✶✶✶	T-22A	94	DSIX - ✶✶✶	T-34A	152	FVDA - ✶✶✶	T-22A	77
DOFR - 8✶✶	T-22A	95	DSIY - ✶✶✶	T-34A	153	FVDA - 8✶✶	T-22A	78
DOFS - ✶✶✶	T-22A	93	DTDA - ✶✶✶	T-13A	115	FVEA - ✶✶✶	T-23A	77
DOHP - ✶✶✶	T-23A	96	DVBA - 8✶✶	T-11A	106	FVEA - 8✶✶	T-23A	78
DOHR - ✶✶✶	T-23A	94	DVBB - 8✶✶	T-11A	106	FVFA - ✶✶✶	T-24A	77
DOHR - 8✶✶	T-23A	95	DVBC - 8✶✶	T-11A	106	FVFA - 8✶✶	T-24A	78
DOHS - ✶✶✶	T-23A	93	DVBD - 8✶✶	T-11A	106	FXBA - ✶✶✶	T-162A	69

CARTRIDGES

Model Code	*Cavity*	*Page*	*Model Code*	*Cavity*	*Page*	*Model Code*	*Cavity*	*Page*
FXCA - ✶✶✶	T-13A	69	**LPBC - ✶✶✶**	T-163A	91	**PPDB - 8✶✶**	T-11A	38
FXDA - ✶✶✶	T-5A	69	**LPDA - ✶✶✶**	T-11A	91	**PPFB - ✶✶✶**	T-2A	31
FXEA - ✶✶✶	T-16A	69	**LPDC - ✶✶✶**	T-11A	91	**PPFB - 8✶✶**	T-2A	38
FXFA - ✶✶✶	T-18A	69	**LPFA - ✶✶✶**	T-2A	91	**PPFC - ✶✶✶**	T-2A	36
HRDA - ✶✶✶	T-11A	156	**LPFC - ✶✶✶**	T-2A	91	**PPHB - ✶✶✶**	T-17A	31
HRDB - ✶✶✶	T-11A	157	**LPHA - ✶✶✶**	T-17A	91	**PPHB - 8✶✶**	T-17A	38
HVCA - ✶✶✶	T-21A	158	**LPHC - ✶✶✶**	T-17A	91	**PPHC - ✶✶✶**	T-17A	36
HVCA - 8✶✶	T-21A	159	**LPJA - ✶✶✶**	T-19A	91	**PPJB - ✶✶✶**	T-19A	31
LHDA - ✶✶✶	T-31A	79	**LPJC - ✶✶✶**	T-19A	91	**PPJB - 8✶✶**	T-19A	38
LHDT - ✶✶✶	T-31A	154	**LRBA - ✶✶✶**	T-163A	92	**PPJC - ✶✶✶**	T-19A	36
LHFA - ✶✶✶	T-32A	79	**LRBC - ✶✶✶**	T-163A	92	**PRDB - ✶✶✶**	T-11A	32
LHFT - ✶✶✶	T-32A	154	**LRDA - ✶✶✶**	T-11A	92	**PRDL - ✶✶✶**	T-11A	40
LHHA - ✶✶✶	T-33A	79	**LRDC - ✶✶✶**	T-11A	92	**PRDP - ✶✶✶**	T-11A	41
LHHT - ✶✶✶	T-33A	154	**LRFA - ✶✶✶**	T-2A	92	**PRFB - ✶✶✶**	T-2A	32
LHJA - ✶✶✶	T-34A	79	**LRFC - ✶✶✶**	T-2A	92	**PRHB - ✶✶✶**	T-17A	32
LKDC - ✶✶✶	T-11A	90	**LRHA - ✶✶✶**	T-17A	92	**PRJB - ✶✶✶**	T-19A	32
LKFC - ✶✶✶	T-2A	90	**LRHC - ✶✶✶**	T-17A	92	**PVDA - ✶✶✶**	T-21A	33
LKHC - ✶✶✶	T-17A	90	**LRJA - ✶✶✶**	T-19A	92	**PVDA - 8✶✶**	T-21A	39
LKJC - ✶✶✶	T-19A	90	**LRJC - ✶✶✶**	T-19A	92	**PVDB - ✶✶✶**	T-21A	34
LODA - ✶✶✶	T-11A	88	**NCBB - ✶✶✶**	T-162A	68	**PVFA - ✶✶✶**	T-22A	33
LODA - 8✶✶	T-11A	89	**NCCC - ✶✶✶**	T-13A	68	**PVFA - 8✶✶**	T-22A	39
LODB - ✶✶✶	T-11A	88	**NCEB - ✶✶✶**	T-5A	68	**PVFB - ✶✶✶**	T-22A	34
LODB - 8✶✶	T-11A	89	**NCCB - ✶✶✶**	T-13A	68	**PVHA - ✶✶✶**	T-23A	33
LODC - 8✶✶	T-11A	88	**NCEC - ✶✶✶**	T-5A	68	**PVHA - 8✶✶**	T-23A	39
LODD - ✶✶✶	T-11A	88	**NCFB - ✶✶✶**	T-16A	68	**PVHB - ✶✶✶**	T-23A	34
LODD - 8✶✶	T-11A	89	**NCFC - ✶✶✶**	T-16A	68	**PVJA - ✶✶✶**	T-24A	33
LODO - ✶✶✶	T-11A	88	**NCGB - ✶✶✶**	T-18A	68	**PVJA - 8✶✶**	T-24A	39
LOFA - ✶✶✶	T-2A	88	**NCGC - ✶✶✶**	T-18A	68	**PVJB - ✶✶✶**	T-24A	34
LOFA - 8✶✶	T-2A	89	**NFAB - ✶✶✶**	T-8A	132	**QCDA - ✶✶✶**	T-21A	149
LOFB - ✶✶✶	T-2A	88	**NFBC - ✶✶✶**	T-162A	66	**QCDB - ✶✶✶**	T-21A	149
LOFB - 8✶✶	T-2A	89	**NFCC - ✶✶✶**	T-13A	66	**QCDC - ✶✶✶**	T-21A	149
LOFC - ✶✶✶	T-2A	88	**NFCD - ✶✶✶**	T-13A	67	**QCDD - ✶✶✶**	T-21A	149
LOFD - ✶✶✶	T-2A	88	**NFDC - ✶✶✶**	T-5A	66	**QCDD - ✶✶✶**	T-21A	149
LOFD - 8✶✶	T-2A	89	**NFDD - ✶✶✶**	T-5A	67	**QPAA - ✶✶✶**	T-11A	148
LOFO - ✶✶✶	T-2A	88	**NFEC - ✶✶✶**	T-16A	66	**QPAB - ✶✶✶**	T-11A	148
LOHA - ✶✶✶	T-17A	88	**NFED - ✶✶✶**	T-16A	67	**QPAC - ✶✶✶**	T-11A	148
LOHA - 8✶✶	T-17A	89	**NFFC - ✶✶✶**	T-18A	66	**QPAD - ✶✶✶**	T-11A	148
LOHB - ✶✶✶	T-17A	88	**NFFD - ✶✶✶**	T-18A	67	**RBAA - ✶✶✶**	T-3A	8
LOHB - 8✶✶	T-17A	89	**NQEB - ✶✶✶**	T-3A	145	**RBAC - ✶✶✶**	T-10A	8
LOHC - ✶✶✶	T-17A	88	**PBBB - ✶✶✶**	T-163A	30	**RBAE - ✶✶✶**	T-8A	130
LOHD - ✶✶✶	T-17A	88	**PBDB - ✶✶✶**	T-11A	30	**RBAP - ✶✶✶**	T-8A	13
LOHD - 8✶✶	T-17A	89	**PBDB - 8✶✶**	T-11A	37	**RBAP - ✶✶✶**	T-8A	133
LOHO - ✶✶✶	T-17A	88	**PBFB - ✶✶✶**	T-2A	30	**RBAR - ✶✶✶**	T-8A	131
LOJA - ✶✶✶	T-19A	88	**PBFB - 8✶✶**	T-2A	37	**RDBA - ✶✶✶**	T-162A	7
LOJA - 8✶✶	T-19A	89	**PBFC - ✶✶✶**	T-2A	35	**RDDA - ✶✶✶**	T-10A	7
LOJB - ✶✶✶	T-19A	88	**PBHB - ✶✶✶**	T-17A	30	**RDFA - ✶✶✶**	T-3A	7
LOJB - 8✶✶	T-19A	89	**PBHB - 8✶✶**	T-17A	37	**RDHA - ✶✶✶**	T-16A	7
LOJC - ✶✶✶	T-19A	88	**PBHC - ✶✶✶**	T-17A	35	**RDJA - ✶✶✶**	T-18A	7
LOJD - ✶✶✶	T-19A	88	**PBJB - ✶✶✶**	T-19A	30	**RPCC - ✶✶✶**	T-162A	6
LOJD - 8✶✶	T-19A	89	**PBJB - 8✶✶**	T-19A	37	**RPCC - 8✶✶**	T-162A	14
LOJO - ✶✶✶	T-19A	88	**PBJC - ✶✶✶**	T-19A	35	**RPEC - ✶✶✶**	T-10A	6
LPBA - ✶✶✶	T-163A	91	**PPDB - ✶✶✶**	T-11A	31	**RPEC - 8✶✶**	T-10A	14

Model Code Index

Model Code	Cavity	Page	Model Code	Cavity	Page	Model Code	Cavity	Page
RPGC - ✶✶✶	T-3A	6	RSFC - 8✶✶	T-2A	23	RVGA - ✶✶✶	T-17A	16
RPGC - 8✶✶	T-3A	14	RSFE - ✶✶✶	T-2A	24	RVGB - ✶✶✶	T-17A	17
RPGD - ✶✶✶	T-3A	12	RSHC - ✶✶✶	T-17A	22	RVGD - ✶✶✶	T-23A	19
RPGS - ✶✶✶	T-3A	15	RSHC - 8✶✶	T-17A	23	RVGD - 8✶✶	T-23A	20
RPGT - ✶✶✶	T-3A	10	RSHE - ✶✶✶	T-17A	24	RVIA - ✶✶✶	T-19A	16
RPIC - ✶✶✶	T-16A	6	RSJC - ✶✶✶	T-19A	22	RVIB - ✶✶✶	T-19A	17
RPIC - 8✶✶	T-16A	14	RSJC - 8✶✶	T-19A	23	RVID - ✶✶✶	T-24A	19
RPID - ✶✶✶	T-16A	12	RSJE - ✶✶✶	T-19A	24	RVID - 8✶✶	T-24A	20
RPIS - 8✶✶	T-16A	15	RVBA - ✶✶✶	T-163A	16	SCCA - ✶✶✶	T-11A	26
RPKC - ✶✶✶	T-18A	6	RVBB - ✶✶✶	T-163A	17	SCEA - ✶✶✶	T-2A	26
RPKC - 8✶✶	T-18A	14	RVCA - ✶✶✶	T-11A	16	SCGA - ✶✶✶	T-17A	26
RPKD - ✶✶✶	T-18A	12	RVCB - ✶✶✶	T-11A	17	SCIA - ✶✶✶	T-19A	26
RQEB - ✶✶✶	T-10A	11	RVCD - ✶✶✶	T-21A	19	SQDB - ✶✶✶	T-11A	27
RQGB - ✶✶✶	T-3A	11	RVCD - 8✶✶	T-21A	20	SQFB - ✶✶✶	T-2A	27
RQIB - ✶✶✶	T-16A	11	RVEA - ✶✶✶	T-2A	16	SQHB - ✶✶✶	T-17A	27
RQKB - ✶✶✶	T-18A	11	RVEB - ✶✶✶	T-2A	17	SQJB - ✶✶✶	T-19A	27
RSBC - ✶✶✶	T-163A	22	RVED - ✶✶✶	T-22A	19	SXCA - ✶✶✶	T-11A	25
RSDC - ✶✶✶	T-11A	22	RVED - 8✶✶	T-22A	20	SXEA - ✶✶✶	T-2A	25
RSDC - 8✶✶	T-11A	23	RVES - ✶✶✶	T-2A	18			
RSFC - ✶✶✶	T-2A	22	RVGS - ✶✶✶	T-17A	18			

NOTES

NOTES

NOTES

WARRANTY INFORMATION, PERFORMANCE ASSURANCE, AND APPLICATION LIMITATIONS

Caution

Sun Hydraulics Limited manufactures a variety of cartridge valves that will fit into the same Sun cavity. Each cartridge is marked with a seven-digit part identification code and a four-digit date code, stamped on the hex surfaces. Designers and users of Sun components are advised that **physical interchangeability of cartridges does not necessarily mean functional interchangeability.** When replacing any Sun cartridges, users should first check with the manufacturer's service literature, their local Sun distributor, or the Sun factory before making any part substitutions.

NOTE: To avoid serious injury, the manufacturer's service literature must be consulted before working on any hydraulic system.

Limited Warranty

Sun Hydraulics Limited warrants its products free from defects in material, workmanship, and design for a period of three years after their installation, provided the installation date is less than one year after manufacture. **"O-rings" and seals are specifically exempted from this warranty.** In no instance is there any warranty of fitness for a particular use and Sun Hydraulics Limited cannot and does not accept responsibility of any type for any of its products that have been subjected to improper installation, improper application, negligence, tampering, or abuse, or which have been repaired or altered outside of the Sun Hydraulics factory. Sun's Limited's liability under this warranty shall extend only to repair or replacement, f.o.b. Sun's factory, of any defective part or product determined by inspection as not conforming to this warranty. Sun makes no other warranties, expressed or implied, and is not responsible for any consequential damages resulting from use by any buyer or user, Sun Hydraulics' liability being limited to the value of product sold or obligation to replace a defective part.

Performance Assurance

All Sun cartridges valves are individually tested at the factory and preset to specific pressure or flow settings where indicated in this catalogue. However, as the actual performance of buyers' equipment cannot be reproduced in Sun's testing laboratory, assurance of suitability of Sun products in the buyer's application is the responsibility of the buyer. This is typically accomplished by the manufacture of a prototype followed by a test or qualification program on the part of the buyer.

Application Limitations

Sun product designs and manufacturing facilities have been specifically developed to provide products for commercial, industrial and mobile hydraulic applications and Sun products are only warranted for these types of uses. **Sun's distributors are not authorised to approve the use of Sun products in any of the following applications:**

- Any steering or braking systems for passenger-carrying vehicles or on-highway trucks.
- Aircraft or space vehicles.
- Ordnance equipment.
- Life support equipment.
- Any end product which is used in a nuclear power plant application.

Specific written approval for any application of Sun products in any of the above named applications should be obtained from Sun Hydraulics Limited. Consultation with Sun distributors or factory engineers is advisable in any situations where applicability is questionable.

Sun Hydraulics International Distribution

Worldwide Distributors

Country	Name	Telephone (Dial International Access Code before number listed below)			Facsimile (Dial International Access Code before number listed below)		
		Country Code	City Code	Local Number	Country Code	City Code	Local Number
Argentina	**Verion I.C.S.A.**	54	11	4754-0044	54	11	4755-7167
Australia	**Simon Hydraulics & Pneumatics Pty. Limited, Queensland**	61	7	3307-8200	61	7	3868-2315
Chile	**Eximtec LTDA.**	56	2	207-6590	56	2	207-6591
China	**Sun Hydraulics Systems (Shanghai) Co., Ltd.**	86	21	5778-0778	86	21	5778-0768
Hong Kong	**Sun Hydraulics Systems (Shanghai) Co., Ltd.**	86	21	5778-0778	86	21	5778-0768
India	**Wipro Limited**	91	80	839-4982	91	80	839-6450
Israel	**Nahum Goldenberg NG, Ltd.**	972	3	534-7976	972	3	534-3049
	Ashrad Systems Eng., Ltd.	972	3	518-4443	972	3	683-2364
Japan	**Kawasaki Heavy Industries, Ltd.**	81	3	3435-6868	81	3	3435-2023
Korea	**Sun Hydraulics Korea Corporation**	82	32	813-1350	82	32	813-1147
Malaysia	**Fluid Power (Pte.) Ltd.**	65	*	254-7777	65	*	253-0319
New Zealand	**Hydraulic Cartridge Valves, Ltd.**	64	9	573-1051	64	9	573-1052
Peru	**Powermatics S.A.**	51	1	4349-4011	51	1	437-0073
Singapore	**Fluid Power (Pte.) Ltd.**	65	*	254-7777	65	*	253-0319
South Africa	**Axiom Hydraulics (Pty.) Ltd.**	27	11	334-3068	27	11	334-4543
Taiwan	**Taiphil Pioneer Corporation**	886	22	505-6992	886	22	500-7051
Thailand	**Tavasin Limited Partnership**	66	2	691-5900	66	2	691-5820

*No City Code Necessary

*No City Code Necessary

European Distributors

Country	Name	Telephone (Dial International Access Code before number listed below)			Facsimile (Dial International Access Code before number listed below)		
		Country Code	City Code	Local Number	Country Code	City Code	Local Number
Austria	**Sun Hydraulik GmbH**	49	2431	8091-0	49	2431	8091-19
Belgium	**HCS–Koppen & Lethem SA/NA**	32	2	361-7401	32	2	361-7405
Denmark	**Hydropower A/S**	45	75	144-444	45	75	144-545
Finland	**Polarteknik PMC Oy Ab**	358	9	878-080	358	9	878-0839-2
France	**Koppen & Lethem S.A.R.L.**	33	1	4147-5530	33	1	4147-5540
Germany	**Sun Hydraulik GmbH**	49	2431	8091-0	49	2431	8091-19
Iceland	**Landvelar HF**	354	5	576-600	354	5	578-500
Italy	**Oleobi Srl**	39	51	765-555	39	51	766-699
	Sun Hydraulik GmbH	49	2431	8091-0	49	2431	8091-19
Netherlands	**Koppen & Lethem Aandrijftechniek BV**	31	182	625-462	31	182	631-300
Norway	**Hydranor A/S**	47	3	286-5656	47	3	286-5655
Poland	**Rockfin Sp. z.o.o.**	48	58	621-2777	48	58	621-2144
	Bibus Menos Sp. z.o.o.	48	58	660-9570	48	58	661-7132
Portugal	**Hidromac LDA**	351	1	726-3011	351	1	726-9525
Spain	**Ingenieria y Dist. Hidraulico**	34	943	696-095	34	943	696-507
Sweden	**JMS Systemhydraulik AB**	46	31	727-68-20	46	31	727-68-37
	Hydnet AB	46	859	470-470	46	859	470-479
Switzerland	**ATP Hydraulik AG**	41	41	790-2533	41	41	790-4266
Turkey	**NGR Hidrolik San.ve Tic Ltd.**	90	312	385-6276	90	312	385-6278
United Arab Emirates	**Hydrolink Co., Ltd.**	971	6	528-0801	971	6	528-0830
United Kingdom	**Sun Hydraulics Limited**	44	2476	217-400	44	2476	217-488